- ☐ **Executed Contract File**
- ☐ **Contractor**
- ☐ **Finance**
- ☐ **City Clerk**
- ☐ **Surety**
- ☐ **Granting Agency**
- ☐ Project Manager
- ☐ CM/Inspector
- ☐ Design Professional
- ☐

City of Kansas City, Missouri
Water Services Department
Keneth Morgan, Director

Project Manual

PROJECT/CONTRACT NO. 80002336/9663

WATER MAIN REPLACEMENT IN THE AREA OF COLLEGE AVENUE TO NORTON AVENUE FROM E 21ST STREET TO E 31ST STREET

BIDDER/ADDRESS

Company _____
Contact
Address _____

Phone _____
Fax
Email

Project Manager: Davis McDonald-Maclin
Telephone: 816-513-0171
Email: davis.mcdonald@kcmo.org

CITY OF FOUNTAINS
HEART OF THE NATION
KANSAS CITY
MISSOURI

CERTIFICATION PAGE

Project/Contract Number: 80002336 / 9663

Project Title: WMR in the area of College Ave to Norton Ave from E. 21st St to E. 31st St

---

I am responsible for the following specifications and drawings:

Drawings:
01 – 28, 32 – 66

Specifications:
None

STATE OF MISSOURI
MELANIE R. JOLLETT
NUMBER
PE-2019000282
PROFESSIONAL ENGINEER

5/27/2025

_____ (SEAL)

I am responsible for the following specifications and drawings:

Drawings:
29 – 31

Specifications:
None

STATE OF MISSOURI
KEVIN D. McCURDY
5-27-2025
NUMBER
PE-2014016128
PROFESSIONAL ENGINEER

_____ (SEAL)

I am responsible for the following specifications and drawings:

Drawings:
67 – 73

Specifications:
None

STATE OF MISSOURI
AMY LYNN McCURDY
NUMBER
PE-2010039281
PROFESSIONAL ENGINEER

5/27/25

_____ (SEAL)

I am responsible for the following specifications and drawings:

Drawings:
None

Specifications:
Divisions 1, 2, 3, 5 and 6

STATE OF MISSOURI
DAVID POIRIER
NUMBER
PE–2005001030
PROFESSIONAL ENGINEER

Digitally signed by David Poirier
DN: C=US, E=dpoirier@kcmo.org, O=KC-Water, OU=Engineering, CN=David Poirier
Date: 2025.05.30 10:00:05-05'00'

_____

I certify under penalty of law that the document and all attachments were prepared under my direction or supervision in accordance with a system designed to assure that qualified personnel properly gathered and evaluated the information submitted, and that the information submitted is, to the best of my knowledge and belief, true, accurate, and complete. I am aware that there are significant penalties for submitting false information, including the possibility of fine and imprisonment for knowing violations.

TABLE OF CONTENTS

Project/Contract Numbers: 80002336/9336

Project Title: Water Main Replacement in the Area of College Avenue to Norton Avenue from E 21st Street to E 31st Street

INTRODUCTORY INFORMATION

00005	Certification Page
00010	Table of Contents
00015	List of Drawings

BIDDING REQUIREMENTS

00130	Invitation to Bid
00210	Instructions to Bidders
00410	Bid Form
00410.01	Experience Reference Form
00410.02	Experience and Reference Summary
00410.03	List of Equipment and Staffing
00413	Allowances
00420	Alternates Bid Form
00430	Bid Bond
00440	CREO KC 5 Construction Contract Instructions
00450	CREO KC 08 Contractor Utilization Plan/Request for Waiver
00450.01	CREO KC Letter of Intent to Subcontract
00460	CREO KC 10 Timetable for MBE/WBE Utilization
00470	CREO KC 11 Request for Modification or Substitution
00485	CREO KC Monthly Reporting Instructions
00485.01	MWBE Monthly Utilization Report
00485.01.1	MWBE Monthly Utilization Report Instructions
00485.02	Project Specific Workforce Monthly Report
00485.02.1	Workforce Monthly Report Instructions
00485.03	Company-Wide Workforce Monthly Report
00485.04	CREO KC Employee Identification Report Form
00485.05	CREO KC Affidavit of Training Program
00485.06	CREO 14 Affirmative Action Program Affidavit
00485.07	CREO Contract Assurances Addendum
00485.08	CREO KC Contract Closeout Approval Form
00490	Pre-Contract Bidder's Certification Form

CONTRACTING REQUIREMENTS

00515	Construction Contract Required Submissions
00515.01	Employee Eligibility Verification Affidavit
00560	Missouri Project Exemption Certificate
00560.01	Kansas City Missouri Tax Exempt Certificate
00610	Performance and Maintenance Bond Form
00615	Payment Bond Form
00620	Insurance Certificate Forms
00630	Revenue Clearance Release Authorization
00630.01	Revenue Clearance Letter Sample
00700	General Conditions

00800 Supplementary Conditions
00830 Wage Rate Requirements – Jackson County
00910 Construction Addenda
00930 Request for Interpretation Form
00930.01 Request for Interpretation Form Log
00931 Supplemental Design Instructions
00932 Request for Proposal
00933 Request for Proposal Log
00940 Change Order Form
00945 Work Change Directive

DIVISION 1 - GENERAL REQUIREMENTS

01000 General Project Requirements
01015 Specific Project Requirements
01016 Water Mains Near Sewers
01020 Record Documents
01210.01 Allowance Authorization
01290.01 Application for Payment
01290.02 Schedule of Values
01290.09 Subcontractors and Major Material Suppliers List
01290.11 Daily Labor Force Report
01290.12 Certificate of Substantial Completion
01290.13 Punch List
01290.14 Contractor Affidavit for Final Payment
01290.15 Subcontractor Affidavit for Final Payment
01300 Submittal
01320 Construction Progress Documentation
01320.01 Daily Field Observation Report
01320.02 Periodic Field Observation Report
01320.03 Working Day Report
01322 Photographic Documentation
01330.01 Letter of Transmittal
01335 Document Management
01500 Temporary Facilities
01566 Cleanup Operations
01570 Temporary Erosion Sediment Control
01580 Project Signs
01581 Public Communications
01630 Substitution Request
01700 Traffic Control
01900 Contract Closeout

DIVISION 2 – SITEWORK

02180 Clearing and Grubbing
02190 Demolition
02200 Earthwork
02230 Geotextiles
02250 Trenching Pipe Embedment and Backfill
02273 Riprap
02320 Utility Casings
02503 Sewer Mainline Open Cut Point Repair
02505 Sanitary Sewer Service Line and Connection

02575 Surface Restoration
02580 Pipe Bursting Gravity Sewers
02605 Drainage Structures
02618 Ductile Iron Pipe for Water Mains
02619 Prestressed Concrete Cylinder Pipe
02620 Ductile Iron Pipe for Sewers
02623 Fiberglass Reinforced Pipe
02624 PVC Gravity Sewer Pipe
02630 Stormwater Pipe and Structures
02631 Polyvinyl Chloride PVC Pressure Pipe for Stormwater and Wastewater
02641 Water Valves
02645 Hydrants and Flushing Assemblies
02669 Thrust Restraints
02675 Flushing Testing and Disinfection of Water Mains
02686 Cleaning and Assessment of Gravity Lines
02702 Testing Sewer Pipe and Manholes
02930 Seeding
02931 Sodding
02949 Tree Protection Removal Replacement

DIVISION 3 – CONCRETE
03000 Miscellaneous Concrete
03362 Sanitary Sewer Manhole Rehabilitation
03370 Sanitary Sewer Manhole Construction
03608 Concrete Vaults

DIVISION 4 – NOT USED

DIVISION 5 – METALS
05010 Sanitary Sewer Manhole Castings
05011 Stormwater Castings
05012 Water Castings

DIVISION 6 – WOOD AND PLASTICS
06010 Cured In Place Pipe, CIPP Point Repairs, and End of Seals
06012 Rehabilitation of Sewer Laterals and Sewer Lateral Connections
06015 Polyvinyl Chloride PVC Expand In Place Pipe
06017 Centrifugally or Pneumatically Cast Concrete Pipe

DIVISION 7 – THRU 16 NOT USED

APPENDIX
SWPPP

CITY OF FOUNTAINS
HEART OF THE NATION

KANSAS CITY
MISSOURI

LIST OF DRAWINGS

Project/Contract Number: 80002336 / 9663

Project Title: Water Main Replacement in the Area of College Avenue to Norton Avenue from E 21st Street to E 31st Street

Item	Set/Title/Description/Designation	Drawing No(s)	Dated
1	Cover Sheet	01	05/27/2025
2	General Notes and Legend	02	05/27/2025
3	Control Points and Benchmark	03 – 04	05/27/2025
4	General Layout	05 – 06	05/27/2025
5	Sanitary and Storm Sewer Structure Table	07 – 08	05/27/2025
6	**BID ALTERNATE – A** Line A – Bales Avenue (E. 23rd Street to E. 21st Street)	09 – 11	05/27/2025
7	Line B – E. 21st Street (Indiana Avenue to Bales Avenue)	12 – 13	05/27/2025
8	Line C – Indiana Avenue (E. 27th Street to E. 21st Street)	14 – 26	05/27/2025
9	Line D – E. 24th Street (Indiana Avenue to Bales Avenue)	27 – 28	05/27/2025
10	Line E – E. 24th Terrace (Indiana Avenue to E End)	29 – 31	01/31/2025
11	Line F – E. 25th Street (Indiana Avenue to Bales Avenue)	32 – 34	05/27/2025
12	Line G – E. 26th Street (College Avenue to Bales Avenue)	35 – 36	05/27/2025
13	**NOT FOR CONSTRUCTION** Line H – College Avenue (E. 27th Street to E. 26th Street)	37 – 39	05/27/2025
14	**NOT FOR CONSTRUCTION** Line I – E. 31st Street (Indiana Avenue to Jackson Avenue)	40 – 49	05/27/2025
15	**NOT FOR CONSTRUCTION** Line J – Monroe Avenue (E. 31st Street to E. 30th Street)	50 – 51	05/27/2025
16	Line K – Mersington Avenue (E.31st Street to E. 28th Terrace)	52 – 56	05/27/2025
17	Line L – Myrtle Avenue (E. 31st Street to E. 29th Street)	57 – 62	05/27/2025
18	Line M – Norton Avenue (E. 31st Street to E. 29th Street)	63 – 66	05/27/2025
19	Traffic Control Sheets	67 – 73	01/31/2025

CITY OF FOUNTAINS
HEART OF THE NATION
KANSAS CITY
MISSOURI

INVITATION TO BID

Project/Contract No.: 80002336/9663

Project Title: Water Main Replacement in the Area of College Avenue to Norton Avenue from E 21st Street to E 31st Street

---

The General Services Department of Kansas City, Missouri will receive sealed Bids until **2:00 PM**, on **Tuesday, June 24, 2025**, at 4800 E 63rd St. Trfwy, (1st) floor Auditorium, Kansas City, MO 64130 **Project/Contract 80002336/9663 – Water Main Replacement in the Area of College Avenue to Norton Ave from E 21st Street to E 31st Street**. Bids will be opened after that time at Same Location.

City desires that Minority Business Enterprises (MBE) and Women's Business Enterprises (WBE) have a maximum opportunity to participate in the performance of City contracts. The goals for this specific Project are (**11%**) MBE participation and (**11%**) WBE participation.

Bidding Documents will be available online to all interested parties at the Kansas City, Missouri Plan Room, http://www.kcmoplanroom.org. All addenda will be posted at this location. Any document or plan may be viewed or downloaded from this location.

Project Manager: Davis McDonald-MacLin
Phone Number: 816-513-0171
E-mail: davis.mcdonald@kcmo.org

Contract Administrator: Santos Madrigal
Phone Number: 816-513-0177
E-mail: santos.madrigal@kcmo.org

View all procurement and contracting opportunities at http://www.kcmo.gov

CITY OF FOUNTAINS
HEART OF THE NATION

KANSAS CITY
MISSOURI

INSTRUCTIONS TO BIDDERS

Project/Contract Number: 8002336/9663

Project Title: Water Main Replacement in the Area of College Avenue to Norton Avenue from E 21st Street to E 31st Street

1. Sealed Bids for **Water Main Replacement in the Area of College Avenue to Norton Avenue from E 21st Street to E 31st Street** will be received by the General Services Department at 4800 E. 63rd Street. 1st Floor Auditorium Kansas City, Missouri until **2:00 P.M., on Tuesday, June 24, 2025,** at which time bidding will be closed.

   a. All Bids will be opened and read aloud. The Bid Envelope must contain all required submissions to be included with the Bid. No Bid may be withdrawn for a period of ninety (90) days after the Bid is opened. Bid security shall likewise continue for the same ninety (90) days unless earlier released by the City. The successful Bidder shall comply with all Bidding and contract requirements. Bids, once opened and read, may not be withdrawn without forfeiture of the Bid security.

   b. All Bids shall be addressed to the **Procurement Manager, Delois Moore**, and shall state on the outside of the sealed Bid envelope "Bid Enclosed", title and Project number, and shall be deposited in the locked Bid box. All Bids must comply with the Bidding Requirements of Kansas City, Missouri (CITY).

2. Consideration of Bids

   a. The City will determine the lowest, responsive and responsible Bid. The City may reject any or all bids. If the City rejects all Bids, the City may: (1) resolicit Bids following the City's normal solicitation procedure; or (2) solicit Bids only from those Bidders that submitted a Bid pursuant to the original solicitation; or (3) use an expedited Bid submission schedule with or without readvertising or issuing any other public notice when the City determines that the delay from the normal City solicitation procedure would not be in the City's best interests.

   b. Alternates. If this solicitation includes Bid Alternates, the City, in its sole discretion, may include any, all or none of the Alternates in determining the lowest, responsive and responsible Bid. In determining lowest, responsive and responsible Bid, the City may include the Alternates in any combination and in any order or priority or choose none of the Alternates. The City may make this determination at any time after Bid Closing and prior to Contract award. The City will act in the best interest of the City in determining whether to include any, all or none of the Alternates and the combination and priority of any Alternates selected. If additional funding becomes available after Contract award, City may add any or all of the Alternates to the Contract by change order.

3. Evidence of Competency to Perform. Each bidder shall furnish with the bid satisfactory evidence of Bidder's competency to perform the proposed work. Such evidence of competency shall consist of the following:

   a. Completed Form 00410.01 Experience Reference Summary for three projects of similar scope performed within the past five (5) years including the name, address and telephone number of the contact person having knowledge of the project and the dollar value of the project.

   b. Statement that, during the three (3) years immediately preceding the date of the Bid, Bidder has received no written notices of violations of any federal or state prevailing wage statute in which prevailing wage penalties were assessed against the Bidder or Bidder has been found in such but has made restitution to affected workmen and complied with any statutory penalty; and a

statement that Bidder is current on payment of Federal and State income tax withholdings and unemployment insurance payments

c. Statement that Bidder participates in a training program that facilitates entry into the construction industry and which may include an on-the-job or in-house training program. By submitting its Bid, Bidder is agreeing to timely submit during the 48 hours after Bid opening an affidavit of describing such program and Bidder's participation.

d. Identify the following Key Personnel proposed for the Project. (**NOTE:** Key Personnel must be committed to the Project for its duration, and may not be removed or substituted without the City's prior written consent.)

   (1) GC Project Manager

   (2) On-Site Field Superintendent

   (3) QC/QA Manager

   (4) Safety Officer

e. For each of the Key Personnel, provide the following background information.

   (1) Years of employment with current employer

   (2) City of residence

   (3) Identify any other projects this person will be involved with concurrently with the Project, and state the time commitment for the Project and each other project

   (4) Discuss professional registrations, education, certifications, and credentials held by this person that are applicable to the Project

f. Summary of Bidder's Quality Assurance/Quality Control Plan for this project

g. Statement regarding all work performed two (2) years immediately preceding the date of the Bid, that contains either (a) a contract by contract listing of any written notices of violations of any federal, state or local DBE/MBE/WBE Program and any damages assessed; or (b) a statement that there have been no such written notices of violations or such penalties assessed; and a statement that Program requirements have been met.

h. Statement that the Bidder has not been rescinded or debarred from any bidding, contractual, procurement, or other such programs by federal, state or local entities.

i. Statement that Bidder is current on payment of Federal and State income tax withholdings and unemployment insurance payments

j. Statement of Bidder's litigation and/or arbitration history over the past five (5) years including final ruling.

k. Statement of Bidder's bond history over the past five (5) years including any incidences of failure to perform.

4. Waiver of Bid Requirements The City Manager or his delegate at any time may waive any requirements imposed by this solicitation or by any City regulation when failure to grant the waiver will result in an increased cost to the City and the requirement waived would be waived for all Bidders for this solicitation and it is in the best interest of the City to grant the waiver. The City Council at any time may waive any requirements imposed in this solicitation by the City's Code of Ordinances when it finds failure to grant the waiver will result in an increased cost to the City and the waived requirement would be waived for all Bidders for this solicitation and it is in the best interest of the City to grant the waiver. The City reserves the right to waive any irregularities and/or formalities as deemed appropriate.

5. Late Bids Bids and modifications of Bids received after the exact hour and date specified for receipt will not be considered unless: (1) the Bid is sent via the U.S. Postal Service, common carrier or contract carrier, by a delivery method that guarantees the Bid will be delivered to the City prior to the submission deadline; or (2) if the Bid is submitted by mail, common carrier or contract carrier it is determined by the

City that the late receipt was due solely to an error by the U.S Postal Service, common carrier or contract carrier; or (3) the Bid is timely delivered to the City but is at a different City location than that specified in this IFB; or (4) the City extends the time after the deadline for a force majeure event that could potentially affect any or all Bidders meeting the deadline.

6. Interpretations and Addenda All questions about the meaning or intent of the Bidding Documents may be directed to the Project Manager listed at the end of these Instructions to Bidders. Interpretations or clarifications considered necessary by the Project Manager in response to such questions will be issued by Addenda to all parties recorded as having received the Bidding Documents. Questions received less than ten (10) days prior to the date for opening of Bids may not be answered. Only answers issued by formal written Addenda will be binding. Oral and other interpretations or clarifications will be without legal effect. Addenda may also be issued to modify the Bidding Documents as deemed advisable by the City.

7. Bid Security Requirements All Bids submitted must be accompanied by a Bid deposit in the amount of five percent (5%) of the base Bid which shall be in the form of a Bid Bond (on the form provided in these Bidding Documents), Cashier's Check, Letter of Credit, Certificate of Deposit or other instrument approved in advance by the City. Prior to submittal of the Bid the City Treasurer must approve both the financial institution and text of a Letter of Credit. A Cashier's Check or a Certificate of Deposit shall be payable to the City Treasurer.

8. Forfeiture of Security If a Bidder fails or refuses to execute the Contract when requested by the City, any Bid security given to the City shall immediately become due and payable and forfeited to the City as liquidated damages.

9. Mistake in Bid Security By submitting a Bid, Bidder is agreeing to correct any mistakes on a Bid security submission when requested by the City. When such a mistake occurs and a Bidder fails or refuses to correct the mistake or execute the Contract when requested by the City, any Bid security shall be forfeited to the City and the Bidder shall also be subject to debarment and damages.

10. Bids that Exceed the Engineer's Estimate The City may offer the apparent lowest, responsive and responsible Bidders the option of performing the Work for the Engineer's estimate for the Project with no changes to the Bid requirements or scope of the Project if the Bid is not more than five percent higher than the Engineer's estimate.

11. Post Bid Required Submissions The successful Bidder will be required to submit the following documents with the signed copies of the Bid Form/Contract or within the timeframes specified in the Notice of Intent to Contract letter. Copies of the City's forms that the successful Bidder will be required to sign are bound into this Project Manual for information:

a. Properly signed, dated, and sealed Performance and Maintenance Bond and Payment Bond;

b. Properly completed certificates of insurance;

c. Copies of licenses required by the City to do the Work;

d. A copy of CONTRACTOR's current Certificate of Good Standing or Fictitious Name Registration from the Missouri Secretary of State, or other acceptable proof; and

12. Indemnification – City of Kansas City. The contract documents contains a requirement that Contractor shall indemnify, defend and hold harmless the City and any of its agencies, officials, officers, or employees from and against all claims, damages, liability, losses, costs, and expenses, including reasonable attorneys' fees, arising out of or resulting from any acts or omissions in connection with the contract, caused in whole or in part by Contractor, its employees, agents, or Subcontractors, or caused by others for whom Contractor is liable, including negligent acts or omissions of the City, its agencies, officials, officers, or employees. The contract requires Contractor to obtain specified limits of insurance to insure the indemnity obligation. Contractor has the opportunity to recover the cost of the required insurance in the Contract Price by including the cost of that insurance in the Bid amount.

13. City's Buy American and Missouri Preference Policies It is the policy of the City that any manufactured goods or commodities used or supplied in the performance of any City contract or any subcontract thereto shall be manufactured or produced in the United States whenever possible. When

Bids offer quality, price, conformity with specifications, term of delivery and other conditions imposed in the specifications that are equal, the City shall select the Bid that uses manufactured goods or commodities that are manufactured or produced in the United States. The City shall give preference to all commodities manufactured, produced, or grown within the State of Missouri and to all firms, corporations, or individuals doing business as Missouri firms, corporations or individuals, when quality is equal or better and delivered price is the same or less. It is the bidder's responsibility to claim these preferences.

14. Affirmative Action It is the policy of the City that any person or entity entering into a contract with the City, will employ applicants and treat employees equally without regard to their race, color, sex, religion, national origin or ancestry, disability, sexual orientation, gender identity or age. Bidder will be required to comply with the City's Affirmative Action ordinance if Bidder is awarded a contract from the City totaling more than $300,000.00. If you have any questions regarding the City's Affirmative Action requirements, please contact CREO KC at (816) 513-1836 or visit the City's website at www.kcmo.gov.

15. Tax Clearance Bidder will be required to furnish to CITY sufficient proof from City's Commissioner of Revenue, verifying that Bidder is in compliance with the license and tax ordinances administered by City's Revenue Division as a precondition to CITY making its first payment under any CONTRACT over $160,000.00. Bidder will also be required to obtain proof of City tax compliance from all of its Subcontractors prior to the Subcontractors performing any Work.

16. Substitutions or "Or-Equal" Items The procedure for submission of substitutions or "or-equal" items is set forth in the General Conditions and Supplementary Conditions.

17. Prevailing Wage Requirements The successful Bidder shall pay the prevailing hourly rate of wages as determined by the Missouri Annual Wage Order and/or Federal Wage Determination set forth in the Project Manual. In case of a conflict between Missouri and Federal wage rates, the higher rate shall apply.

Successful Bidder shall be required to use City's Internet web based Prevailing Wage Reporting System provided by City and protocols included in that software during the term of this Contract. When requested by the City, Bidder shall submit user applications to City's provided Prevailing Wage Reporting System for all applicable personnel and shall require subcontractors to submit same.

18. Contract Information Management System. Successful Bidder shall be required to use City's Internet web based Contract Information Management System/Project Management Communications Tool provided by City and protocols included in that software during the term of this Contract. Bidder/Proposer shall submit user applications to City's provided Contract Information Management System for all personnel, subcontractors or suppliers as applicable.

19. MBE/WBE Program Requirements City desires that Minority Business Enterprises (MBE) and Women's Business Enterprises (WBE) have a maximum opportunity to participate in the performance of City contracts. The goals for this specific Project are (**11%**) MBE participation and (**11%**) WBE participation. The City's CREO KC Forms and CREO KC Instructions for Construction Projects are incorporated into these Bidding Documents and the Contract Documents. The MBE/WBE Directory is available on the City's website at www.kcmo.gov. Please call the Civil Rights and Equal Opportunity Department at (816) 513-1836 for assistance.

Successful Bidder shall be required to use City's Internet web based MBE/WBE Program Reporting System provided by City and protocols included in that software during the term of this Contract. When requested by the City, Bidder shall submit user applications to City's provided MBE/WBE Program Reporting System for all applicable personnel and shall require subcontractors/subconsultants to submit same.

20. Waiver of MBE/WBE Requirements The City Council may waive any and all MBE/WBE requirements imposed by any Bidding Document or the MBE/WBE Ordinance and Contract with the lowest, responsive and responsible Bidder if the City Council determines a waiver is in the best interests of the City.

21. Forfeiture of Bid Bond for Failure to Make MBE/WBE Submissions By submitting its Bid, Bidder is agreeing to the following: (1) Bidder has made by Bid opening a good faith effort to meet the MBE/WBE goals established for the Project; or Bidder will continue to make during the 48 hours after Bid opening a

good faith effort to meet the MBE/WBE goals established for the Project; and (2) Bidder will timely submit its 00450 CREO KC Construction Contractor Utilization Plan/Request for Waiver (CREO KC Form 8) and 00450.01 Letter of Intent to Subcontract for each MBE/WBE listed on the 00450 CREO KC Construction Contractor Utilization Plan/Request for Waiver; and (3) Bidder will submit documentation of its good faith efforts to meet the MBE/WBE goals when requested by the City. Failure to meet these requirements in good faith will result in Bidder being debarred and forfeiting its Bid Bond.

22. Workforce Program Requirements. City desires that minorities and women have a maximum opportunity to practice their trades on city construction projects. The minimum company-wide goals are a ten percent (10%) minority workforce and two percent (2%) women workforce. The City's CREO KC Forms and CREO KC Instructions for Construction Projects are incorporated into these Bidding Documents and the Contract Documents.

Successful Bidder shall be required to use City's Internet web based Workforce Program Reporting System provided by City and protocols included in that software during the term of this Contract. When requested by the City, Bidder shall submit user applications to City's provided Workforce Program Reporting System for all applicable personnel and shall require subcontractors to submit same.

23. **On-Site Inspection** The Project Site will be available for inspection by Bidders. Bidders visiting the Project Site shall be responsible for their own safety.

24. Signatures Each copy of the Bid Form/Contract must be signed and properly dated by the following, as applicable:

Limited Liability Company:

□ a member of the limited liability Company authorized to sign on behalf of the company.

Partnership:

□ a partner authorized to sign on behalf of the partnership.

Sole Proprietor:

□ the proprietor.

Joint Venture:

□ the parties to the Joint Venture authorized to sign on behalf of each party to the Joint Venture, or a person authorized by each party to the Joint Venture to sign on behalf of all parties to the Joint Venture.

Corporation:

□ a corporate office authorized to sign on behalf of the corporation. Corporation's seal must be attached to the signature.

25. Forward all questions in writing to the following Project Manager and Contract Administrator. Questions received less than seven (7) days prior to the Bid Date may not be answered. Interpretations or clarifications considered necessary by the Project Manager in response to such questions will be issued by Addenda to all Bidders. Oral or other interpretations or clarifications shall be without legal effect, even if made at a Pre-Bid Meeting.

Davis McDonald-MacLin, Project Manager
Water Services Department
4800 E. 63rd
Kansas City, MO 64130
(816) 513-0171
E-mail: davis.mcdonald@kcmo.org

Santos Madrigal, Contract Administration
Water Services Department
4800 E. 63rd
Kansas City, MO 64130
(816) 513-0177
E-mail: santos.madrigal@kcmo.org

For persons with disabilities needing reasonable accommodations please contact Jaime Guillen at 816-513-9982. If you need to use the Relay Missouri Center call 1-800-RELAY-MO (1-800-735-2966).

Bidder: _____

CITY OF FOUNTAINS
HEART OF THE NATION

KANSAS CITY
MISSOURI

BID FORM/CONTRACT

Project/Contract Numbers: 80002336/9663

Project Title: Water Main Replacement in the Area of College Avenue to Norton Avenue from E 21st Street to E 31st Street

1. Bidder, having examined the Bidding Documents, related documents and the Site of the Work, and being familiar with all the conditions affecting the construction of the proposed Work, including Laws and Regulations and the availability of materials and supplies, agrees, if this Bid is selected by CITY, this Bid Form/Contract will become the Contract between Bidder and CITY for Bidder to furnish all labor and materials, equipment and services necessary for the proper completion of the Work in accordance with the Contract Documents, including general construction work at the price(s) stated below, which stated sums include fees and all other charges applicable to materials, appliances, labor and all things subject to and upon which other charges may be levied.

   Bidding contractors are to use a "base price" from your chosen supplier for Ductile Iron pipe, and not add any speculative, estimated raw material adders or surcharges. Compensation for additional raw material adders or surcharges on Ductile Iron pipe will be paid for on a $/ton basis based on the scrap surcharge/adder from the Ductile Iron Pipe manufacturer at actual time of shipment. The acceptable categorical commodity price reference shall be Steel scrap No1 bushing, consumer buying price, delivered mill Chicago, $/gross ton. In order to qualify for compensation, the contractor shall submit the applicable line items on their invoices quantifying the surcharge in addition to the applicable $/ton AVG price of the commodity category described herein and published by Fastmarkets.com corresponding to the dates of shipment.

2. Bidder agrees the Contract Documents will comprise the entire agreement between CITY and Bidder. The Contract Documents are identified in the General Conditions and are incorporated into and made part hereof this Bid Form/Contract by reference.

3. Bidder agrees that if this Bid Form/Contract is executed by CITY, Bidder's offer is accepted and this Bid Form/Contract that incorporates all other Contract Documents shall constitute the Contract between the parties. Bidder authorizes the CITY to fill in the Contract Price on this Bid Form/Contract in accordance with Bidder's Bid. Bidder agrees that this Bid Form/Contract may be executed in one or more counterparts, each of which will be deemed an original copy of this Bid Form/Contract and all of which, when taken together, will be deemed to constitute one and the same Bid Form/Contract. This Bid Form/Contract shall be effective upon the execution of counterparts by both parties, notwithstanding that both parties may not sign the same counterpart. The parties' signatures transmitted by facsimile or by other electronic means shall be proof of the execution of this Bid Form/Contract and shall be acceptable in a court of law. A copy of this Bid Form/Contract shall constitute an original and shall be acceptable in a court of law.

4. The Bid Price(s) shall be shown in numeric figures only.

TOTAL BASE BID IN NUMERIC FIGURES	$_____
ALLOWANCE NO. 1	$150,000.00
ALTERNATE A FIGURES	$_____
TOTAL BID IN NUMERIC FIGURES	$_____

5. The undersigned Bidder has given CITY'S Project Manager written notice of all conflicts, errors or discrepancies that it has discovered in the Contract Documents and the written resolution thereof by the Project Manager or by the DESIGN PROFESSIONAL is acceptable to Bidder.

6. The undersigned Bidder agrees that this Bid shall remain subject to selection by CITY, and may not be withdrawn for ninety (90) days after the day Bids are opened.
7. The undersigned Bidder certifies that this Bid contains no modifications, deviations, riders or qualifications.
8. Form 00413 Allowances contain prices included in the Base Bid, and are incorporated into this Bid. Form(s) must be completed and returned with this Bid.
9. The undersigned Bidder acknowledges receipt of the following addenda listed by number and date appearing on each addendum:

Addendum Number	Dated	Addendum Number	Dated
(_____)	(_____)	(_____)	(_____)
(_____)	(_____)	(_____)	(_____)
(_____)	(_____)	(_____)	(_____)
(_____)	(_____)	(_____)	(_____)
(_____)	(_____)	(_____)	(_____)
(_____)	(_____)	(_____)	(_____)
(_____)	(_____)	(_____)	(_____)

10. By submitting its bid, Bidder is agreeing to meet or exceed the minimum employment goals of 10% minority and 2% women during the term of its contract with the City, or request a waiver of the goals. If a waiver is requested, Bidder must establish good faith efforts towards meeting the goals as set forth in the CREO KC Instructions for Construction Contracts and the City's Construction Employment Program Ordinance (commonly known as the "Workforce Ordinance") (City Code Section 3-515). Within forty-eight (48) hours after bid opening, the construction contractor shall submit **CREO KC Employee Identification Report Form**, which shall include: the name, home address, job title, sex and race/ethnicity of each person the contractor anticipates will be performing construction labor hours creditable towards the minimum workforce goals applicable to the construction contractor individually.
11. Should Bidder fail to meet or exceed the minimum employment goals or otherwise establish that Bidder is entitled to a waiver under circumstances in which Bidder has previously failed to meet or exceed the goals on one or more occasions with the twenty-four month period immediately preceding the completion of the Work under this Bid Form/Contract, Bidder may be suspended from participating, either as a contractor or subcontractor, on any future contract with the City for a period ranging from thirty days to six months as further specified in the Contract Documents. This program is distinguished from the M/WBE Program in that it is not based on company ownership but rather is based on workforce hours instead of a budgetary allocation of work.
12. By submitting its bid, Bidder warrants that if its bid should exceed $300,000.00 and Bidder employs fifty (50) or more people, Bidder has an affirmative action program in place and will maintain the affirmative action program in place for the duration of its contract with the City. Bidder further warrants that it will comply with the affirmative action requirements contained in the General Conditions as incorporated by reference into this Bid Form/Contract.
13. Section 15 through Section 18 constitutes the Affidavit of Intended Utilization required to be submitted by Bidders.

14. By submitting its bid, Bidder is agreeing to the following: (1) Bidder has made by bid opening a good faith effort to meet the MBE/WBE/DBE goals established for the project; or Bidder will continue to make during the 48 hours after bid opening a good faith effort to meet the MBE/WBE/DBE goals established for the project; and (2) Bidder will timely submit its **00450 CREO KC 08 Contractor Utilization Plan/Request for Waiver** and **00450.01 CREO KC Letter of Intent to Subcontract** for each MBE/WBE listed on the 00450 CREO KC 8 Construction Contractor Utilization Plan/Request for Waiver; and (3) Bidder will submit documentation of its good faith efforts to meet the MBE/WBE/DBE goals when requested by the City. Failure to meet these requirements in good faith will result in Bidder forfeiting its bid bond.

PROJECT GOALS: ___11___% **MBE** __11___% **WBE** _____ % **DBE**

BIDDER PARTICIPATION: _____% **MBE** _____% **WBE** _____ % **DBE**

15. To the best of Bidder's knowledge, the following are names of certified MBEs and/or WBEs with whom Bidder, or Bidder's subcontractors, presently intend to contract with if awarded the Contract on the above project: ***(*All firms must <u>currently</u> be certified by Kansas City, Missouri Civil Rights & Equal Opportunity – CREO KC – Department*)***

A. Name of M/WBE Firm _____
Address _____
Telephone No. _____
I.R.S. No. _____
Area/Scope of work _____
Subcontract amount _____

B. Name of M/WBE Firm _____
Address _____
Telephone No. _____
I.R.S. No. _____
Area/Scope of work _____
Subcontract amount _____

C. Name of M/WBE Firm _____
Address _____
Telephone No. _____
I.R.S. No. _____
Area/Scope of work _____
Subcontract amount _____

D. Name of M/WBE Firm _____
Address _____
Telephone No. _____
I.R.S. No. _____
Area/Scope of work _____
Subcontract amount _____

E. Name of M/WBE Firm _____
Address _____
Telephone No. _____
I.R.S. No. _____
Area/Scope of work _____
Subcontract amount _____

F. Name of M/WBE Firm _____
Address _____
Telephone No. _____
I.R.S. No. _____
Area/Scope of work _____
Subcontract amount _____

(List additional MBE/WBEs, if any, on additional pages and attach to this form)

16. By submitting its bid, Bidder is agreeing it will identify and timely submit within 48 Hours after Bid opening those MBE/WBE subcontractors with dollar amounts and scopes of work, which apply to or exceed the MBE/WBE goals for the Project on the **00450 CREO KC 08 Contractor Utilization Plan/Request for Waiver.**

17. Bidder agrees that failure to meet or exceed the MBE/WBE Goals for the above project will require the Director of the Civil Rights & Equal Opportunity (CREO KC) Department to recommend disapproval of the bid unless the Director of CREO KC finds the Bidder established good faith efforts towards meeting the goals as set forth in the CREO KC Forms and Instructions for Construction Projects and the City's MBE/WBE Ordinance.

Bidder: _____

Business Entity Type:
(__) Missouri Corporation
(__) Foreign Corporation
(__) Fictitious Name Registration
(__) Sole Proprietor
(__) Limited Liability Company
(__) Partnership
(__) Joint Venture
(__) Other: (Specify)_____

BIDDER
Legal name & address of Bidder, person firm, partnership, corporation, or association submitting Bid:
_____
Phone No: _____
Cell No: _____
Facsimile No: _____
Bidder's E-Mail: _____
_____
Federal ID. No. _____

I hereby certify that I have authority to execute this document on behalf of Bidder, person, firm, partnership, corporation or association submitting Bid.

By: _____
(Signature)

_____
(Print Name)

Title:_____

Date:_____

(Attach corporate seal if applicable)

NOTARY

Subscribed and sworn to before me this _____ day of _____, 20__.

My Commission Expires: _____ _____

ACCEPTANCE OF BID

CITY, by executing this Bid Form/Contract, hereby accepts Bidder's Bid and this Bid Form/Contract that incorporates all other Contract Documents shall constitute the Contract between the Parties.

CITY shall pay CONTRACTOR for completion of the Work in accordance with the Contract Documents a maximum amount of _____ Dollars, ($ _____). The Contract Price includes:

00413 Allowances, included in the Bid, a copy of which is attached

By executing this Bid Form/Contract, CITY accepts Bidder's offer for the Contract Price stated above and this Bid Form/Contract that incorporates all other Contract Documents shall constitute the Contract between the parties

_____
City of Kansas City, Missouri (OWNER or City)

Approved as to form:

_____
Assistant City Attorney

I hereby certify that there is a balance, otherwise unencumbered, to the credit of the appropriation to which the foregoing expenditure is to be charged, and a cash balance, otherwise unencumbered, in the treasury, to the credit of the fund from which payment is to be made, each sufficient to meet the obligation hereby incurred.

_____
Director of Finance (Date)

EXPERIENCE AND REFERENCE SUMMARY

Project Number: 80002336/9663

Project Title: Water Main Replacement in the Area of College Avenue to Norton Avenue from E 21st Street to E 31st Street

Firm's Legal Name	
Mailing Address	
Contact – Name & Email	
Contact – Phone & Fax	

NO.	PROJECT & LOCATION	OWNER NAME & ADDRESS CONTACT & PHONE NUMBER	PROJECT DURATION & DATE COMPLETED	$ VALUE
1.				
2.				
3.				
4				
5				
6				
7				
9				
10				

CITY OF FOUNTAINS
HEART OF THE NATION
KANSAS CITY
MISSOURI

EXPERIENCE AND REFERENCE SUMMARY – CURRENT PROJECTS

Project/Contract Number: 80002336/9336

Project Title: Water Main Replacement in the Area of College Avenue to Norton Avenue from E 21st Street to E 31st Street

Firm's Legal Name	
Mailing Address	
Contact – Name & E-Mail	
Contact – Phone & Fax	

NO.	PROJECT & LOCATION	CONTRACT AMOUNT/ % COMPLETE	OWNER NAME & ADDRESS CONTACT & PHONE NUMBER	LENGTH, DIAMETER & MATERIAL OF CONSTRUCTION OR DESCRIPTION OF REPAIRS	START DATE
1.					
2.					
3.					
4.					
5.					
6.					
7.					
8.					

LIST OF EQUIPMENT AND STAFFING AVAILABLE FOR PROJECT

Project/Contract Number: 80002336/9336

Project Title: Water Main Replacement in the Area of College Avenue to Norton Avenue from E 21st Street to E 31st Street

Page _____ of _____

	EQUIPMENT AVAILABLE FOR CONSTRUCTION (OR ATTACH LIST)		STAFFING BREAKDOWN	NUMBER OF EACH CATEGORY
1.		1.	OFFICE STAFF	
2.		2.	SUPERVISORS	
3.		3.	FIELD STAFF – CREW FOREMEN	
4.		4.	FIELD STAFF – OPERATORS (NOT FOREMEN)	
5.		5.	FIELD STAFF – LABORERS (NOT FOREMEN)	
6.		6.		

Bidder: _____

CITY OF FOUNTAINS
HEART OF THE NATION
KANSAS CITY
MISSOURI

ALLOWANCE FORM

Project/Contract No.80002336/9663

Project Title: Water Main Replacement in the Area of College Avenue to Norton Avenue from E 21st Street to E 31st Street

Allowance No.:	Allowance Description:	Allowance in Figures:
1	To complete assigned work orders for replacement of inoperable water valves and other water distribution improvements (not otherwise to be provided under the Contract Drawings) and for ductile iron pipe material scrap surchage or at the City's Discretion	$150,000.00 To be included in the Total Bid Price

CITY OF FOUNTAINS
HEART OF THE NATION

KANSAS CITY
MISSOURI

ALTERNATES

Project Number: 80002336/9663

Project Title: Water Main Replacement in the Area of College Avenue to Norton Avenue from E 21st Street to E 31st Street

ALT: A	Description: Line A – Sta. 0+00 to 5+25 Install 525 LF of 12" Class 52 Zinc Coated DIP w/ Polywrap (see Sheets 9 & 10)	❑ Add [+] ❑ Deduct [-]	Price in Figures: $

ALT:	Description:	❑ Add [+] ❑ Deduct [-]	Price in Figures: $

ALT:	Description:	❑ Add [+] ❑ Deduct [-]	Price in Figures: $

ALT:	Description:	❑ Add [+] ❑ Deduct [-]	Price in Figures: $

ALT:	Description:	❑ Add [+] ❑ Deduct [-]	Price in Figures: $

ALT:	Description:	❑ Add [+] ❑ Deduct [-]	Price in Figures: $

ALT:	Description:	❑ Add [+] ❑ Deduct [-]	Price in Figures: $

CITY OF FOUNTAINS
HEART OF THE NATION

KANSAS CITY
MISSOURI

BID BOND

Project/Contract Numbers: 80002336/9663 _____

Project Title: Water Main Replacement in the Area of College Avenue to Norton Avenue from E 21st Street to E 31st Street _____

Bond Number _____

KNOW ALL MEN BY THESE PRESENTS: That _____ of _____, as Principal, and _____ as Surety, hereby bind themselves, their heirs, executors, administrators, successors and assigns, jointly and severally, firmly by these presents unto KANSAS CITY, MISSOURI, a constitutionally chartered municipal corporation, as Obligee, in the sum of

_____Dollars ($_____), lawful money of the United States.

WHEREAS, Principal is herewith submitting its Bid to enter into a contract with Kansas City for the above referenced project,

NOW, THEREFORE the condition of this obligation is such that if the Principal is awarded the contract the Principal will, within the time required, enter into a contract and give a good and sufficient surety bonds to secure the performance of the terms and conditions of the contract and for the prompt payment of all labor and material furnished in the prosecution thereof as required by the contract documents, then this obligation shall be void; otherwise the Principal and Surety will immediately pay unto the Obligee the full amount of this bond as liquidated damages for failure to fulfill the conditions of this obligation, but in no event shall the Surety's liability exceed the penal sum hereof.

Signed, sealed and delivered this _____ day of _____. _____.

BIDDER AND PRINCIPAL

Name, address and facsimile number of Bidder and Principal

_____

_____

_____

_____

I hereby certify that I have the authority to execute this document on behalf of the Bidder and Principal.

By: _____

Title:_____

(Attach corporate seal if applicable)

SURETY

Name, address and facsimile number of Surety:

_____

_____

_____

_____

I hereby certify that (1) I have authority to execute this document on behalf of Surety; (2) Surety has an A.M. Best rating of A- or better; (3) Surety is named in the current list of "Companies Holding Certificates of Authority as Acceptable Sureties on Federal Bonds and as Acceptable Reinsuring Companies" as published in Circular 570 (most current revision) by the Financial Management Service, Surety Bond Branch, U.S. Department of the Treasury; and (4) Surety is duly licensed to issue bonds in the State of Missouri and in the jurisdiction in which the Project is located.

By:_____

Title:_____

Date:_____

(Attach seal and Power of Attorney)

CREO KC INSTRUCTIONS

FOR CONSTRUCTION CONTRACTS

PART A. ECONOMIC EQUITY & INCLUSION GOALS--MBE/WBE PROGRAM

I. City's Economic Equity & Inclusion Goals--MBE/WBE Program.

A. The City has adopted an Economic Equity & Inclusion Goals--Minority/Women Business Enterprise ("MBE/WBE") Program (Sections 3-421 through 3-469, Code of Ordinances) (the "Program") to implement the City's policy of supporting the fullest possible participation in City contracts and change orders of firms owned and controlled by minorities and women. Each construction contract may have an MBE and/or WBE goal for participation. An MBE or WBE goal is a numerical objective the City has set for the contract that may be awarded pursuant to these bid specifications. Goals are stated as a percentage of contract dollars. For example, if an MBE goal for a contract is 10% and a Bidder submits a bid of $100,000, the goal for MBE participation would equal $10,000. The specific MBE/WBE goals on this contract are set forth elsewhere in the bid specifications.

B. These Civil Rights & Equal Opportunity Department ("CREO KC") Forms & Instructions are part of the BIDDING DOCUMENTS and CONTRACT DOCUMENTS as defined in the General Conditions. By submitting a Bid, the Bidder agrees, as a material term of the contract, to carry out the City's MBE/WBE Program by making good faith efforts to include certified MBE/WBEs in the contract work to the extent of the goals listed for the contract and to the fullest extent consistent with submitting the lowest and best bid to the City. Bidder agrees that the Program is incorporated into this document and agrees to follow the Program. Although it is not a requirement that a Bidder in fact meet or exceed both the MBE and WBE Goals, it is a requirement for approval of the Bid that a Bidder objectively demonstrate to the City that good faith efforts have been made to meet the Goals. Bidders must attempt to meet both the MBE and WBE goals and request a waiver if either is not met.

C. The following CREO KC Forms are attached and must be used for MBE/WBE submittals:

1. Contractor Utilization Plan/Request for Waiver (CREO KC Form 8); and
2. Letter of Intent to Subcontract (CREO KC Form 00450.01); and
3. Timetable for MBE/WBE Utilization (CREO KC Form 10); and
4. Request for Modification or Substitution (CREO KC Form 11); and
5. Contractor Affidavit for Final Payment (Form 01290.14); and
6. Subcontractor Affidavit for Final Payment (Form 01290.15).

Warning: The City only gives MBE/WBE credit for a Bidder's use of City certified MBE/WBEs. A certified MBE/WBE firm is a firm that has been certified by the City's Civil Rights & Equal Opportunity Department as such. An MBE/WBE firm must be certified before the date on which the contractor utilization plan is due. Certified MBEs and WBEs are listed in the M/W/DBE Kansas City Mo. Online Directory, which is available on the City's website at www.kcmo.org. Before a Bidder submits a bid, Bidder

should contact CREO KC and consult the directory to make sure any firm proposed for use for MBE/WBE participation has been certified.

II. Required Submissions Following Bid Opening.

A. Bidder must submit the following documents within forty-eight (48) hours of bid opening:

1. **Contractor Utilization Plan/Request for Waiver (CREO KC Form 8).** This form states a Bidder's plan to use specific certified MBE/WBEs in the performance of the contract and includes the following:

   a. The work to be performed by each MBE/WBE and the amounts each is to be paid for the work; and

   b. The name, address, race or ethnic origin, gender and employer identification number or social security number of each MBE/WBE that will perform the work.

   c. An automatic request for waiver in the event Bidder has not met or exceeded the MBE and/or WBE goals for the contract but believes that it has made good faith efforts to meet or exceed the goals and desires a waiver of the goals. If a waiver is requested, CREO KC will examine the Bidder's documentation of good faith efforts and make a recommendation to grant or deny the waiver. CREO KC will recommend a waiver be granted only if the Bidder has made good faith efforts to obtain MBE/WBE participation.

2. **Letter(s) of Intent to Subcontract (CREO KC Form 00450.01)**. A letter must be provided from each MBE/WBE listed on the Contractor Utilization Plan. These letters verify that the MBE/WBE has agreed to execute a formal agreement for the work and indicate the scope of work to be performed and the price agreed upon for the work.

III. Required Submission when Requested by City.

A. Bidder must submit the following documents when requested by City:

1. **Timetable for MBE/WBE Utilization (CREO KC Form 10).**

2. **Documentation of good faith efforts.**

IV. Required Monthly Submissions during term of Contract.

A. Bidder must submit the following report on a monthly basis if awarded the contract:

1. **M/WBE Monthly Utilization Report.** This report must be submitted to the Director by the 15th of each month. Failure to submit timely reports may result in delays in processing of current and future contract approvals and payment applications. The method of submission of this report is through the B2GNow Diversity Management System (B2GNow).

V. Required Submittals for Final Contract Payment.

A. Contractor must submit the following documents with its request for final payment under

the contract:

1. **Contractor Affidavit for Final Payment (Form 01290.14)**
2. **Subcontractor Affidavit(s) for Final Payment (Form 01290.15)**
3. **Final B2GNow Monthly Contract Audit Report with all payment audits confirmed.**

VI. Additional Submittals.

A. Contractor may be required to make additional submittals during the term of the Contract, including **Request for Modification or Substitution (CREO KC Form 11)**. Refer to Section IX, Modification of the Contractor Utilization Plan or Substitution of an MBE/WBE, for additional instructions on when this form must be submitted.

VII. MBE/WBE Participation Credit.

A. The following shall be credited towards achieving the goals:

1. The total contract dollar amount that a prime contractor has paid or is obligated to pay to a subcontractor that is a certified MBE or WBE, except as otherwise expressly provided for herein.
2. The total contract dollar amount that a prime contractor that is a certified MBE or WBE performed itself.
3. Sixty percent (60%) of the total dollar amount paid or to be paid by a prime contractor to obtain supplies or goods from a supplier who is a certified MBE or WBE.
4. Ten percent (10%) of the total dollar amount paid or to be paid by a prime contractor to obtain supplies or goods from a supply broker who is a certified MBE or WBE.
5. One hundred percent (100%) of the total dollar amount paid or to be paid by a prime contractor to a manufacturer of construction supplies who is a certified MBE or WBE.
6. Subcontractor participation with a lower tier MBE/WBE subcontractor using one of the above methods of participation.

B. **NO CREDIT**, however, will be given for the following:

1. Participation in a contract by a MBE or WBE that does not perform a commercially useful function as defined by the Program; and
2. Any portion of the value of the contract that an MBE or WBE subcontractor subcontracts back to the prime contractor or any other contractor who is not a qualified MBE/WBE; and
3. Materials and supplies used on the contract unless the MBE/WBE is responsible for negotiating the price, determining quality and quantity, ordering the materials and installing (where applicable) and paying for material itself; and
4. Work performed by an MBE or WBE in a scope of work other than that in which the MBE or WBE is currently certified.

VIII. Methods for Securing Participation of MBE/WBEs and Good Faith Efforts.

A. A bidder is required to make good faith efforts to achieve the MBE/WBE goals. Good faith efforts are efforts that, given all relevant circumstances, a Bidder actively and aggressively seeking to meet the goals can reasonably be expected to make. Good faith efforts must be made before the Bidder submits a Contractor Utilization Plan, in other words, within 48 hours of bid opening. However, efforts made to increase participation of MBEs and WBEs following submission of the CUP can be considered as evidence of good faith efforts to meet the goals.

B. In evaluating good faith efforts, the Director of CREO KC will consider whether the Bidder has performed the following, along with any other relevant factors:

1. Advertised for at least 15 calendar days prior to the bid or proposal due date opportunities to participate in the contract in general circulation media, trade and professional association publications, small and minority business media, and publications of minority and women's business organizations which are included in a list along with their current contact information identified on the directory as the list of publications available to publish such advertisements, which list shall be updated by CREO KC no less than every three (3) month.

2. Sent written notices at least fifteen (15) calendar days prior to the bid or proposal due date containing the information required in section (9) below, by certified mail, e-mail, or facsimile, to at least 80% of MBEs and WBEs which are included in a list along with their contact information identified on the directory as the list of organizations available to receive such notices, which list shall be updated by CREO KC no less than every three (3) months.

3. Sent written notices, containing the information required by section (9) below, by certified mail, e-mail or facsimile, to at least 80% of MBEs and WBEs listed on the directory certified in the applicable scopes of work for the particular bid soliciting their participation in the contract at least 15 calendar days prior to the bid or proposal due date.

4. Attempted to identify portions of the work for qualified MBE and/or WBE participation in order to increase the likelihood of meeting the goals, including breaking down contracts into economically feasible units that take into consideration the capacity of available MBE/WBEs appearing on the CREO KC directory.

5. At any time prior to submission of the CUP or submittal of a request for modification of a CUP, requested assistance in achieving the goals from the Director and acted on the Director's recommendations.

6. Conferred with certified MBEs and WBEs which inquired about or responded to the bid solicitation and explained to such MBEs and WBEs the scope and requirements of the work for which their bids or proposals were solicited, and if not all certified MBEs and WBEs in the particular scopes listed on the directory have inquired about or responded to the bid solicitation for each scope of work, then contact by certified mail, e-mail or telephone the greater of ten (10) or 80% of additional certified MBEs and WBEs in the particular scopes of work listed on the directory and offer to confer with such MBEs and WBEs for such particular scope of work and request such MBEs

and WBEs to submit a proposal.

7. Attempted to negotiate in good faith with certified MBEs and WBEs which responded to the bid solicitation or those certified MBEs and WBEs that were conferred with as contemplated in section (6) above, and other qualified MBEs and WBEs, at the option of the bidder, proposer, or contractor, as applicable, to perform specific subcontracts, not rejecting them as unqualified without sound reasons based on a thorough investigation of their capabilities by the bidder, proposer, or contractor; in the event an MBE or WBE is the low bid, but rejected as unqualified, the bidder, proposer, or contractor and the director or board, as applicable, shall provide sound reasons for rejecting such MBE or WBE.
8. Attended pre-bid meeting when such meetings were indicated in the solicitation of bids or otherwise by the bidder, proposer, or contractor, as applicable or by the director provided the director provides written direction to the bidder, proposer, or contractor at the time the goals are recommended.
9. Written notices and advertisements to be provided pursuant to sections (1), (2) and (3) above shall include the following information:
    a. The bid due date;
    b. The name of the project;
    c. The address or general location of the project;
    d. The location of plans and specifications for viewing;
    e. Contact information of the prime contractor;
    f. A general description of the scopes of work that are the subject of the solicitation;
    g. The goals established for the applicable contract, and if the goals are still subject to board approval, then a statement that the goals as stated are preliminary and are subject to board approval;
    h. If the project or any portion of the project is subject to prevailing wage then a statement that all or a portion of the project will be subject to prevailing wage, as applicable; and if only a portion of the scopes are subject to prevailing wage, then identification of such scopes provided that such scopes are known as of the time of bid solicitation;
    i. The date and time of any pre-bid meeting(s), if any, which have been scheduled by the bidder, proposer, contractor or developer as of the bid solicitation; and

    Any other information deemed relevant by the bidder, proposer, contractor or developer, as applicable, or the director to the extent the director provides written direction to the bidder, proposer, contractor or developer of such additional information at the time the goals are recommended by the director. 8. Within five (5) working days after drawing the bid specifications, sent certified letters, verifiable e-mails or proof of facsimiles to certified MBEs and WBEs listed in the M/W/DBE Kansas City Mo. Online Directory.

C. A Bidder may be required to give the City documentation to prove that it made good faith efforts. The Bidder will be contacted by the City with further instructions about when this documentation must be submitted.

IX. Modification of the Contractor Utilization Plan or Substitution of an MBE/WBE.

A. After bid opening, a Bidder or Contractor may need to substitute an MBE and/or WBE or request that the amount of MBE/WBE participation listed in its Contractor Utilization Plan be modified. Bidder or Contractor must file a **Request for Modification or Substitution (CREO KC Form 11) prior to actual substitution and within a reasonable time after learning that a modification or substitution is necessary.** The Director may approve substitutions or modifications and upon approval, the modifications and substitutions will become an amendment to the Contractor Utilization Plan. Modifications or substitutions may be approved when:

1. The Director finds that the Bidder or Contractor made and provided evidence of good faith efforts to substitute the MBE/WBE listed on the Contractor Utilization Plan with other certified MBE/WBEs for the scope of work or any other scope of work in the contract; and

2. The Bidder or Contractor has not attempted intentionally to evade the requirements of the program and it is in the best interests of the City to allow a modification or substitution; and

3. The Director also finds one of the following:

   a. The listed MBE/WBE is non-responsive or cannot perform; or

   b. The listed MBE/WBE has increased its previously quoted price to the bidder, proposer or contractor without a corresponding change in the scope of the work; or

   c. The listed MBE/WBE has committed a material default or breach of its contract with the contractor; or

   d. Requirements of the scope of work of the contract have changed and render subcontracting not feasible or not feasible at the levels required by the goals established for the contract; or

   e. The listed MBE/WBE is unacceptable to the contracting department; or

   f. The listed MBE/WBE thereafter had its certification revoked; or

B. A modification shall not be made unless the modification or substitution has first been requested and approved by the Director. Once a modification has been made, a Construction Contractor Employee Identification Report (CREO KC Form 0485.04) for the newly approved subcontractor must be submitted at least ten (10) days prior to the approved subcontractor commencing work on a City contract.

X. Appeals.

A. In conformance with the Act, appeals may be made to the City Fairness in Construction Board or Fairness in Professional Services and Goods Board on the following:

1. The grant or denial of a Request for Waiver;
2. Substitution for an MBE/WBE listed on a Contractor Utilization Plan;
3. Modification of the percentage of MBE/WBE participation on a Contractor Utilization Plan;
4. Liquidated Damages;
5. The amount of MBE/WBE credit the Contractor may receive for MBE/WBE participation identified in the contractor utilization plan.

B. Any appeal must be filed in writing with the Director within fifteen (15) calendar days of notice of the determination. Mailing, faxing, personal delivery or posting at CREO KC of determinations shall constitute notice. The appeal shall state with specificity why the Bidder or Contractor believes the determination is incorrect

C. Failure to file a timely appeal shall constitute a waiver of a Bidder's or Contractor's right to appeal such determination and such person shall be estopped to deny the validity of any determination which could have been timely appealed.

XI. Access to Documents and Records.

A. By submitting a Bid, each Bidder agrees to permit the City, its duly authorized agents or employees, access at all reasonable times to all books and business records of Bidder as may be necessary to ascertain compliance with the requirements of this document and the Act, within ten (10) calendar days of the date of the written request.

B. All Bidders agree to cooperate with the contracting department and CREO KC in studies and surveys regarding the MBE/WBE program.

XII. Miscellaneous.

A. A Bidder or Contractor shall bear the burden of proof with regard to all issues on appeal.

B. In the event of any conflict between this document and the Program, the provisions of the Program shall control. The terms used in this document are defined in the Program.

C. Oral representations are not binding on the City.

D. The City Council may waive the requirements of this document and the Program and award the contract to the lowest and best bidder if the City Council determines a waiver is in the best interests of the City.

E. The Director may grant extensions of time to Bidders to submit Letters of Intent to Subcontract (CREO KC Form 00450.01).

XIII. Liquidated Damages – Economic Equity & Inclusion Goals--MBE/WBE Program.

A. If Contractor fails to achieve the MBE/WBE goals stated in its Contractor Utilization Plan, as amended, the City will sustain damages, the exact extent of which would be difficult or impossible to ascertain. Therefore, in order to liquidate those damages, the monetary difference between either (1) the amount of the MBE/WBE goals set forth in the Contractor Utilization Plan, as amended, or (2) the goals established (whichever is lower) and the amount actually paid to qualified MBEs and WBEs for performing a commercially useful function will be deducted from the Contractor's payments as

liquidated damages. In determining the amount actually paid to qualified MBEs and WBEs, no credit will be given for the portion of participation that was not approved by the Director, unless the Director determines that the Contractor acted in good faith. No deduction for liquidated damages will be made when, for reasons beyond the control of the Contractor, the MBE/WBE participation stated in the Contractor Utilization Plan, as amended and approved by the Director is not met.

PART B. CONSTRUCTION EMPLOYMENT PROGRAM REQUIREMENTS

IMPORTANT: This Part B is applicable to City construction contracts estimated by the City prior to solicitation as: (1) requiring more than 800 construction labor hours and (2) valued in excess of $300,000.00. This program is distinguished from the M/WBE Program in that it is based on workforce hours of the Bidder and *all* its participating subcontractors rather than the actual contract value of work. The instructions herein detail the specifics related to this program. This program is in *addition* to the M/WBE program.

I. City's Construction Employment Program.

A. The City has adopted a Construction Employment Program (Sections 3-501 through 3-525, Code of Ordinances) (the "Workforce Program" or "Program") to implement the City's policy of supporting the fullest possible utilization of minority and women workers in the construction industry.

B. The minimum workforce goals are currently set by ordinance at 10% for minorities and 2% for women. These goals are separate from M/WBE goals. Public recognition may be provided if the bidder achieves at least twice the minimum participation.

C. Construction contracts subject to the Workforce Program and the company-wide and project-specific workforce goals ("workforce goals") are those contracts to construct, reconstruct, improve, enlarge or alter any fixed work that is estimated by the City prior to solicitation to: (1) require <u>more than</u> 800 construction labor hours, (2) has estimated costs that <u>exceed $300,000.00</u>, and (3) involve the expenditure of public funds.

D. The successful bidder may meet company-wide goals by counting the bidder's utilization of minorities and women throughout the Kansas City metropolitan statistical area. In addition, the successful Bidder is responsible to ensure that it and its subcontractors cumulatively make good faith efforts to meet project-specific goals for utilization of minorities and women.

E. These Civil Rights & Equal Opportunity Department ("CREO KC") Forms & Instructions are part of the BIDDING DOCUMENTS and CONTRACT DOCUMENTS as defined in the General Conditions. By submitting a Bid, the Bidder agrees, as a material term of the contract, to carry out the City's Construction Employment Program by making good faith efforts to utilize minority and women workers to the fullest extent consistent with submitting the lowest and best bid to the City. Bidder agrees that the Program is incorporated into this document and agrees to follow the Program. Although it is not a requirement that a Bidder in fact meet or exceed the construction employment goals to receive approval from CREO KC, a Bidder not doing so is required to

objectively demonstrate to CREO KC that good faith efforts have been made.

F. The following reports are to be used for Construction Employment Program submittals:

1. Project Workforce Monthly Report
2. Company-Wide Workforce Monthly Report

II. Required Submissions.

A. Within forty-eight (48) hours after bid opening, the construction contractor shall submit the **Construction Employee Identification Report** (CREO KC Form 00485.04) and shall include: the name, home address, job title, sex and race/ethnicity of each person working for the Prime. The individuals to be listed on the form are those which the construction contractor *anticipates* will be performing construction labor hours creditable towards the minimum workforce goals applicable to the construction contractor individually.

The following circumstances also require the submission of a Construction Employee Identification Report:

a. Prior to contract execution for those City construction contracts awarded pursuant to a request for proposals (RFP), the construction contractor shall submit a **Construction Employee Identification Report** (CREO KC Form 00485.04).

b. At least ten (10) days prior to the date upon which any subcontractor is to commence work under a City construction contract, the Prime shall submit a **Construction Employee Identification Report** (CREO KC Form 00485.04) for the subcontractor.

B. The CREO KC Director has established the B2GNow Diversity Management System ("B2GNOW") (an online reporting tool) as the preferred method for fulfilling reporting requirements of the Workforce Program. The CREO KC Director will allow paper submission in lieu of on-line submission if the on-line submission process presents a hardship to the contractor.

C. Bidder must submit the following documents through B2GNow on a monthly basis if awarded the contract:

1. **Project Workforce Monthly Report.** This report is contract specific. This report must be submitted to the Director by the 15th of each month for the Contractor and each subcontractor. It will be utilized to report the Contractor's own workforce compliance data with regard to the City's construction contract. Failure to submit timely reports may result in delays in processing of current and future contract approvals and payment applications.

2. **Company-Wide Workforce Monthly Report.** This report is not contract specific; it is used to report on the utilization of women and minorities, by trade, company-wide. This report must be submitted to the Director by the 15th of each month. It will be utilized to report the Contractor's own workforce compliance data with regard to

every contract (both privately and publicly funded) that the Contractor has in progress throughout the Kansas City Metropolitan Statistical Area. Failure to submit timely reports may result in delays in processing of current and future contract approvals and payment applications.

III. Submittal Required for Final Contract Payment.

A. The final Project Workforce Monthly Report(s) and Company-Wide Workforce Monthly Report must be submitted before final payment will be made and/or retainage released. Contractor shall note the submittal of the final reports by notation in the box entitled "Final Report"

IV. Methods for Securing Workforce Participation and Good Faith Efforts.

A. A bidder is required to make good faith efforts to achieve the construction employment goals and ensure its subcontractors are making good faith efforts to achieve the construction employment goals. If a Bidder or its subcontractors will be unable to secure enough minority and female participation to meet or exceed the construction employment goals, a bidder must, within a reasonable time after so learning, request a waiver or modification of the goals by the Director of CREO KC. The Director will request evidence of the Bidder's and its' subcontractors' good faith efforts to meet the goals. The Director will examine the Bidder's request and the Bidder's documentation of good faith efforts for itself and its subcontractors. The Director will examine the Bidder's request and the Bidder's documentation of good faith efforts and grant or deny a waiver or modification. The Director will grant a waiver or modification only if the Bidder has made good faith efforts to secure minority and female participation.

IMPORTANT: The Bidder's subcontractors on a city construction contract must meet the workforce goals collectively. The bidder is responsible to ensure the subcontractors make good faith efforts to meet the workforce goals. Bidders are required to include language in its subcontracts that ensure the subcontractors make good faith efforts to meet or exceed the workforce goals.

B. In evaluating good faith efforts, the Director will consider whether the Bidder and its subcontractors have performed the following:

1. For those bidders that are not signatories to a collective bargaining agreement with organized labor:

    a. Requested in writing the assistance of the Director with respect to efforts to promote the utilization of minorities and women in the workforce and acted upon the Director's recommendations; and

    b. Advertised in minority or women trade association newsletters and/or minority or women owned media at least 15 calendar days prior to the utilization of any construction services on the city construction contract and used terminology that sufficiently describes the work available, the pay scale, the application process, and anything else that one might reasonably be expected to be informed of relevant to the position being advertised; and

    c. Maintained copies of each advertisement and a log identifying the publication and date of publication; and

d. Conducted real and substantial recruitment efforts, both oral and written, targeting resident, minority and women community-based organization, schools with a significant minority student population, and training organizations serving the recruitment area; and

e. Established and maintained a current list of resident, minority and women recruitment sources, providing written notification to the recruitment sources of available employment opportunities, and maintained records of the notices submitted to the organizations and any responses thereto; and

f. Maintained a current file for the time period of the city construction contract with the name, address, and telephone number of each resident, minority and woman job applicant, the source of the referral, whether or not the person was hired, and in the event that the applicant was not hired, the reason therefore; and

g. Promoted the retention of minorities and women in its workforce with the goals of achieving sufficient annual hours for minorities and women to qualify for applicable benefits; and

h. Required by written contract that all subcontractors comply with the above efforts.

2. For those bidders that are signatories to collective bargaining agreements with organized labor:

a. Requested in writing from each labor union representing crafts to be employed that:

i. the labor union make efforts to promote the utilization of residents of the City, minorities and women in the workforce; and

ii. the labor union identify any residents of the City, minorities and women in its membership eligible for employment; and

b. Collaborated with labor unions in promoting mentoring programs for journeypersons intended to assist minorities and women in increasing retention with the goals of achieving sufficient annual hours to qualify for applicable benefits; and

c. Maintained a current file with the name, address, and telephone number of each resident, minority and women worker identified by the labor union, whether or not the person was hired, and in the event the person was not hired, the reason therefore.

d. To the extent the good-faith efforts applicable to bidders that are signatories to collective bargaining agreements with organized labor conflict with the procedures implemented by the bidder in order to comply with the relevant bargaining agreement, the bidder shall substitute other procedures as may be approved by the Director in writing, in order to accomplish the purpose and intent of this section.

C. In the event workforce goals are not met or there is anticipation that goals will not be

met, a Bidder will be required to give the City documentation to prove that it and/or it's subcontractors made good faith efforts. The Bidder will be contacted by the City with further instructions about when this documentation must be submitted.

V. Access to Documents and Records.

A. By submitting a Bid, each Bidder agrees to permit the City, its duly authorized agents or employees, access at all reasonable times to all books and business records of Bidder as may be necessary to ascertain compliance with the requirements of this document and the Program, within ten (10) days of the date of the written request. Each bidder further agrees to require, if awarded the contract, that every subcontractor permit the City the same access to documents and records.

B. All Bidders agree to cooperate with the contracting department and CREO KC in studies and surveys regarding the construction employment program.

VI. Appeals.

A. In conformance with the Program, appeals may be made to the Construction Workforce Board on the following:

1. Determinations by the Director that a contractor did not meet the construction employment goals and did not make a good faith effort to meet the goals;
2. Recommendations by the Director to assess liquidated damages;
3. Recommendation by the Director that a contractor be declared ineligible to receive any city construction contract for a period of time up to one year.

B. Any appeal must be filed in writing with the Director within ten (10) working days of notice of the recommendation or determination. The appeal shall state with specificity why the Bidder or Contractor believes the recommendation or determination is incorrect.

C. Failure to file a timely appeal shall constitute a waiver of a Bidder's or Contractor's right to appeal such determination or recommendation and such person shall be estopped to deny the validity of any order, determination, recommendation or action of CREO KC which could have been timely appealed.

VII. Miscellaneous.

A. A Bidder or Contractor shall bear the burden of proof with regard to all issues on appeal.

B. The successful bidder may be required to meet with the Director of CREO KC or the Director's designee for the purpose of discussing the construction employment program, the bidder's efforts to realize the goals, and any other problems and/or issues affecting the realization of the goals or the program in general.

C. In the event of any conflict between this document and the Program, the provisions of the Program shall control. The terms used in this document are defined in the Program.

D. Oral representations are not binding on the City.

VIII. Failure to Meet Workforce Goals

A. If Contractor or its subcontractors fail to achieve the construction employment goals or make good faith efforts to achieve those goals without having previously obtained a

waiver or modification of those goals, the City will sustain damages, the exact extent of which would be difficult or impossible to ascertain. These damages are magnified if the failure to abide by the requirements of the Workforce Program is recurring. Therefore, if the directory finds that the contractor or subcontractor have not met, or made good faith efforts to meet, the construction employment goals for any quarter, the director may:

1. Assess liquidated damages against the construction contractor, as specified in the city construction contract;
2. Require the contractor to attend mandatory training, as specified in the construction contract;
3. Declare the contractor ineligible to receive any city construction contract or participate as a subcontractor under any city construction contract for a period of time up to six months, as specified in the construction contract.

IX. First Source Program

A. The City has established a labor force recruiting program intended to assist contractors in identifying, interviewing and hiring qualified job applicants residing in Kansas City, Missouri. While the contractor awarded a City construction contract is not prohibited from hiring persons residing outside Kansas City, Missouri, the recruiting resource provided for herein (the "First Source Program") must be utilized by the contractor subject to the construction employment goals as set forth in this **PART B, CONSTRUCTION EMPLOYMENT PROGRAM REQUIREMENTS**.

B. The City utilizes the services of the Full Employment Council, Inc., to administer the First Source Program. The contractor shall contact the Full Employment Council within 48 hours of contract award, regardless of whether the contractor has any hiring needs at that time, and within 48 hours following any job vacancy which the contractor reasonably anticipates filling during the term of the City construction contract. The contractor shall comply with the First Source Program requirements as implemented by the Full Employment Council unless otherwise excused in writing by the Director of CREO KC for good cause shown. To ensure compliance with the First Source Program, the contractor shall contact those persons at the Full Employment Council responsible for administering the program, which may be identified by visiting their website at www.feckc.org and clicking on the link for KCMO First Source Hiring Program. The contractor shall not hire any individual to provide construction services on a City construction contract unless the contractor has met the requirements of the First Source Program.

C. The contractor shall require that its subcontractors utilize the First Source Program to the same extent that the contractor is required to do so, and shall incorporate the requirements of this Section IX into every subcontract. Every subcontractor shall be required to contact the Full Employment Council within 48 hours of subcontract award, regardless of whether the subcontractor has any hiring needs at that time, and within 48 hours following any job vacancy which the subcontractor reasonably anticipates filling during the term of their subcontract on a City construction project.

CONTRACTOR UTILIZATION PLAN/REQUEST FOR WAIVER

Project Number _____

Project Title _____

_____ _____
(Department Project) Department

_____
(Bidder/Proposer)

STATE OF_____)
) ss
COUNTY OF_____)

I,_____, of lawful age and upon my oath state as follows:

1. This Affidavit is made for the purpose of complying with the provisions of the MBE/WBE submittal requirements on the above project and the MBE/WBE Program and is given on behalf of the Bidder/Proposer listed below. It sets out the Bidder/Proposer's plan to utilize MBE and/or WBE contractors on the project.

2. The project target goals are_____**% MBE** and_____**% WBE.**

3. Bidder/Proposer assures that it will utilize a minimum of the following percentages of MBE/WBE participation in the above project:

   - **BIDDER/PROPOSER PARTICIPATION:_____% MBE_____% WBE**

   - **POST-BID/POST-RFP ESTIMATED BUDGET: $_____**

4. The following are the M/WBE subcontractors whose utilization Bidder/Proposer warrants will meet or exceed the above-listed Bidder/Proposer Participation. Bidder/Proposer warrants that it will utilize the M/WBE subcontractors to provide the goods/services described in the applicable Letter(s) of Intent to Subcontract, copies of which shall collectively be deemed incorporated herein). ***(All firms <u>must</u> <u>currently</u> be certified by Kansas City, Missouri)***

   - Name of M/WBE Firm _____
     Address_____
     Telephone No. _____
     I.R.S. No. _____

Name of M/WBE Firm _____
Address_____
Telephone No. _____
I.R.S. No. _____

Name of M/WBE Firm _____
Address_____
Telephone No. _____
I.R.S. No. _____

Name of M/WBE Firm _____
Address_____
Telephone No. _____
I.R.S. No. _____

Name of M/WBE Firm _____
Address_____
Telephone No. _____
I.R.S. No. _____

Name of M/WBE Firm _____
Address_____
Telephone No. _____
I.R.S. No. _____

(List additional M/WBEs, if any, on additional page and attach to this form)

4. The following is a breakdown of the percentage of the total contract amount that Bidder/Proposer agrees to pay to each listed M/WBE:

MBE/WBE BREAKDOWN SHEET

MBE FIRMS:

Name of MBE Firm	Supplier/Broker/Contractor	Subcontract Amount*	Weighted Value**	% of Total Contract

_____	_____	_____	_____	_____

TOTAL MBE $ / TOTAL MBE %: $_____ _____%

WBE FIRMS:

Name of WBE Firm	Supplier/Broker/Contractor	Subcontract Amount*	Weighted Value**	% of Total Contract
_____	_____	_____	_____	_____
_____	_____	_____	_____	_____
_____	_____	_____	_____	_____
_____	_____	_____	_____	_____
_____	_____	_____	_____	_____
_____	_____	_____	_____	_____
_____	_____	_____	_____	_____
_____	_____	_____	_____	_____

TOTAL WBE $ / TOTAL WBE %: $_____ _____%

*"Subcontract Amount" refers to the dollar amount that Bidder/Proposer has agreed to pay each M/WBE subcontractor as of the date of contracting and is indicated here solely for the purpose of calculating the percentage that this sum represents in proportion to the total contract amount. Any contract amendments and/or change orders changing the total contract amount may alter the amount due an M/WBE under their subcontract for purposes of meeting or exceeding the Bidder/Proposer participation.

**"Weighted Value" means the portion of the subcontract amount that will be credited towards meeting the Bidder/Proposer participation. See CREO KC Forms and Instructions for allowable credit and special instructions for suppliers.

5. Bidder/Proposer acknowledges that the monetary amount to be paid each listed M/WBE for their work, and which is approved herein, is an amount corresponding to the percentage of the total contract amount allocable to each listed M/WBE as calculated in the MBE/WBE Breakdown Sheet. Bidder/Proposer further acknowledges that this amount may be higher than the subcontract amount listed therein as change orders and/or amendments changing the total contract amount may correspondingly increase the amount of compensation due an M/WBE for purposes of meeting or exceeding the Bidder/Proposer participation

6. Bidder/Proposer acknowledges that it is responsible for considering the effect that any change orders and/or amendments changing the total contract amount may have on its ability to meet or exceed the Bidder/Proposer participation. Bidder/Proposer further acknowledges that it is responsible for submitting a Request for Modification or Substitution if it will be unable to meet or exceed the Bidder/Proposer participation set forth herein.

7. If Bidder/Proposer has not achieved both the M/WBE goal(s) set for this Project, Bidder/Proposer hereby requests a waiver of the MBE and/or WBE goal(s) that Bidder/Proposer has failed to achieve

8. Bidder/Proposer will present documentation of its good faith efforts, a narrative summary detailing its efforts and the reasons its efforts were unsuccessful when requested by the City.

9. I hereby certify that I am authorized to make this Affidavit on behalf of the Bidder/Proposer named below and who shall abide by the terms set forth herein:

Bidder/Proposer primary contact: _____
Address: _____
_____
Phone Number: _____
Facsimile number: _____
E-mail Address: _____

By:_____
Title:_____
Date:_____
(Attach corporate seal if applicable)

Subscribed and sworn to before me this_____day of_____, 20____.

My Commission Expires: _____ _____
Notary Public

LETTER OF INTENT TO SUBCONTRACT

Check one:

Original LOI: ☐

Updated LOI: ☐

Project Name/Title _____

Project Location/Number _____

PART I: Prime Contractor_____agrees to enter into a contractual agreement with M/W/DBE Subcontractor_____who will provide the following goods/services in connection with the above-reference contract: [Insert a brief narrative describing goods/services to be provided. Broad Categorizations (e.g., "electrical," "plumbing," etc.) or the listing of NAICS Codes in which M/W/DBE Subcontractor is certified are insufficient and may result in denial of this Letter of Intent to Subcontract.]

_____

_____

_____

for an estimated amount of $_____(or_____% of the total estimated contract value.)

M/WBE Vendor type:

☐ Subcontractor/manufacturer (counts as 100% of contract value towards goals)

☐ Supplier (counts as 60% of the total dollar amount paid or to be paid by a prime contractor for supplies or goods towards goals)

☐ Broker (counts as 10% of the total dollar amount paid or to be paid by a prime contractor for supplies or goods towards goals)

M/W/DBE Subcontractor is, to the best of Prime Contractor's knowledge, currently certified with the City of Kansas City's Civil Rights & Equal Opportunity Department to perform in the capacities indicated herein. Prime Contractor agrees to utilize M/W/DBE Subcontractor in the capacities indicated herein, and M/W/DBE Subcontractor agrees to work on the above-referenced contract in the capacities indicated herein, contingent upon award of the contract to Prime Contractor.

PART 2: This section is to be completed by the M/W/DBE subcontractor listed above. Please attach additional sheets as needed for more than one intended sub-tier contract. **IMPORTANT: Falsification of this document will result in denial and other remedies available under City Code.**

Select one:

☐ The M/W/DBE Subcontractor listed above **IS NOT** subcontracting any portions of the above-stated scope of work(s). (Continue to Part 3.)

☐ The M/W/DBE Subcontractor listed above **IS** subcontracting certain portions of the above stated scope of work(s) to:

(1) Company name: _____

Full address: _____

Street number and name City, State and Zip Code

Primary contact: _____

Name Phone

a) This subcontractor is (select one): ☐MBE ☐WBE ☐DBE ☐N/A

i: If this subcontractor is an M/W/DBE certified with the City of Kansas City, Missouri, a separate Letter of Intent must be attached to this document.

ii. If this subcontractor is NOT a certified M/W/DBE certified with the City of Kansas City, Missouri, the firm must still be listed for reporting purposes but a Letter of Intent is not required.

b) Scope of work to be performed: _____

c) The dollar value of this agreement is: _____

PART 3:

NOTE: SIGNATURES AND NOTARIZATIONS REQUIRED FOR NEW LETTERS OF INTENT (LOI); SIGNATURES ONLY FOR UPDATED LOI (ADDING VALUE TO EXISTING CONTRACT).

PRIME CONTRACTOR BUSINESS NAME: _____

_____ _____
Signature: Prime Contractor Print Name

_____ _____
Title Date

State of)

County of)

I,_____, state that the above and foregoing is based on my best knowledge and belief.

Subscribed and sworn to before me, a notary public, on this day of_____, 20_____

My Commission Expires: _____ _____
Notary Public

STAMP:

MWDBE SUBCONTRACTOR BUSINESS NAME: _____

_____ _____
Signature: Subcontractor Print Name

_____ _____
Title Date

State of)

County of)

I,_____, state that the above and foregoing is based on my best knowledge and belief.

Subscribed and sworn to before me, a notary public, on this day of_____, 20_____

My Commission Expires: _____ _____
Notary Public

STAMP:

TIMETABLE FOR MBE/WBE UTILIZATION

(This form should be submitted to the City after contract award.)

I, _____, acting in my capacity as _____
(Name) *(Position with Firm)*
of _____, with the submittal of this Timetable, certify that
(Name of Firm)
the following timetable for MBE/WBE utilization in the fulfillment of this contract is correct and true to the best of my knowledge.

ALLOTTED TIME FOR THE COMPLETION OF THIS CONTRACT
(Check one only)

15 days	___	75 days	___	135 days	___
30 days	___	90 days	___	150 days	___
45 days	___	105 days	___	165 days	___
60 days	___	120 days	___	180 days	___

Other _____ (Specify)

Throughout _____ Beginning 1/3 _____
Middle 1/3 _____ Final 1/3 _____
Beginning 1/3 _____% Middle 1/3 _____% Final 1/3 _____%

PLEASE NOTE: Any changes in this timetable require approval of the Civil Rights & Equal Opportunity Department in advance of the change.

If you have any questions regarding the completion of this form, please contact the Civil Rights & Equal Opportunity Department at: (816) 513-1836**.**

_____
(Signature)

_____
(Position with Firm)

_____
(Date)

REQUEST FOR MODIFICATION OR SUBSTITUTION

*(This Form **must** be submitted to CREO KC to request substitutions for an MBE/WBE listed in the Contractor Utilization Plan or for modification of the amount of MBE/WBE participation listed in the Contractor Utilization Plan. This Form shall be an amendment to the Contractor Utilization Plan.)*

BIDDER/PROPOSER/CONTRACTOR: _____
ADDRESS: _____
PROJECT NUMBER OR TITLE: _____
AMENDMENT/CHANGE ORDER NO: (if applicable) _____

Project Goals:	_____% MBE	_____% WBE
Contractor Utilization Plan:	_____% MBE	_____% WBE

1. I am the duly authorized representative of the above Bidder/Contractor/Proposer and am authorized to request this substitution or modification on behalf of the Bidder/Contractor/Proposer.

2. I hereby request that the Director of CREO KC recommend or approve: (check appropriate space(s))

   a. ☐ A substitution of the certified MBE/WBE firm _____,
   (Name of new firm)
   to perform _____,
   (Scope of work to be performed by new firm)

   for the MBE/WBE firm _____ which is currently
   (Name of old firm)
   listed on the Bidder's/Contractor's/Proposer's Contractor Utilization Plan to

   perform the following scope of work: _____.
   (Scope of work of old firm)

   b. ☐ A modification of the amount of MBE/WBE participation currently listed on the Bidder's/Contractor's/Proposer's Contractor Utilization Plan from

   _____ % MBE_____% WBE *(Fill in % of MBE/WBE Participation currently listed on Contractor Utilization Plan)*

   TO

   _____% MBE _____% WBE *(Fill in New % of MBE/WBE Participation requested for Contractor Utilization Plan)*

   c. Attach 00450.01 Letter of Intent to Subcontract letter for each new MBE/WBE to be added.
   d. Attach a copy of the most recent 00485.01 or on-line M/WBE Monthly Utilization Report

3. Bidder/Contractor/Proposer states that a substitution or modification is necessary because: (check applicable reason(s))

___The MBE/WBE listed on the Contractor Utilization Plan is non-responsive or cannot perform.

___The MBE/WBE listed on the Contractor Utilization Plan has increased its previously quoted price without a corresponding change in the scope of work.

___The MBE/WBE listed on the Contractor Utilization Plan has committed a material default or breach of its contract.

___Requirements of the scope of work of the contract have changed and make subcontracting not feasible or not feasible at the levels required by the goals established for the contract.

___The MBE/WBE listed on the Contractor Utilization Plan is unacceptable to the City contracting department.

___Bidder/Contractor/Proposer has not attempted intentionally to evade the requirements of the Act and it is in the best interests of the City to allow a modification or substitution.

4. The following is a narrative summary of the Bidder's/Contractor's/Proposer's good faith efforts exhausted in attempts to substitute the MBE/WBE firm named above which is currently listed on the Contractor Utilization Plan with other qualified, certified MBE/WBE firms for the listed scope of work or any other scope of work in the project:

5. Bidder/Proposer/Contractor will present documentation when requested by the City to evidence its good faith efforts.

Dated:_____ _____

(Bidder/Proposer/Contractor)

_____

By: (Authorized Representative)

CREO KC MONTHLY REPORTING INSTRUCTIONS

M/WBE Monthly Utilization Report Instructions

1. MBE/WBE Reporting applies to Contracts that have approved MBE/WBE goals assigned.
2. The City will utilize a web-based MBE/WBE Reporting System in the administration of this Contract. This web-based application database is a collaboration tool selected and provided by the City, which will allow Contractors and Consultants/Subcontractors and Subconsultants to enter data and report on compliance.

Prevailing Wage Certified Payroll Report Instructions

1. Prevailing Wage Certified Payroll Report applies to Contracts that include Prevailing Wage or Davis Bacon Provisions.
2. This web-based application database is provided by the City for reporting certified payrolls and other related prevailing wage data.
3. Computer Requirements: Minimum Intel Pentium® 4 Processor 2.4 GHz or equivalent processor with 512MB of RAM; recommended Centrino Duo® Processors 1.6 GHz or equivalent with 2GB of RAM, or higher.
    a. Computer Operation System: Windows XP, Windows Vista, or Windows 7
    b. Web Browser: Google Chrome
    c. Connection Speed/Minimum Bandwidth: DSL, ADSL or T1 Line for transferring a minimum of 3 Mbps Downstream and 512 Kbps Upstream
4. City will assist Contractor in providing training of personnel and Subcontractor's personnel.
5. Contractor and Subcontractors shall have the responsibility for visiting the web site and entering data in on timely basis, and as necessary to be in compliance with Prevailing Wage Requirements included in their contracts.

Workforce Monthly Report Instructions

1. Workforce Monthly Reporting only applies to Construction Contracts greater than $300,000 and greater than 800 projected labor hours.
2. The City will utilize a web-based Reporting System in the administration of this Contract. This web-based application database is a collaboration tool selected and provided by the City, which will allow Contractors and Subcontractors to enter data and report on Workforce compliance.

CITY OF KANSAS CITY, MISSOURI
Human Relations Department
M/WBE MONTHLY UTILIZATION REPORT

Report Date:	**Project Name:**	**City Project Number:**	
Project Address:		**Contract Award Date:**	**City Vendor ID:**
General Contractor (GC):		**City Contract Number:**	**City Department Name**
Contact Person/Phone:		**General Contract Amount:** $	**Total Amount Paid By City To Date:** $
General Contractor Address:		**Contract Goals:**	_____% DBE _____% MBE _____% WBE
Email Address:		**Total Contract Days:**	**Completion Date:**

MBE/DBE Subcontractor	Date of Certification	Date of Subcontract	Subcontract Amount	% of Total Contract	Estimated Start date	Amount Paid This Period	Amount Paid To Date	% of Contract Paid to Date
WBE/DBE Subcontractor								
Totals								

Contractor should submit report by the 15th of each month.

Phillip Yelder, Director
Human Relations Department
414 E. 12th Street, 4th Floor
Kansas City, MO 64106
Phone: 816-513-1836
FAX: 816-513-1805

Narrative:

Report Submitted By: _____ **Date** _____

REMINDER: CONTRACTOR is responsible for meeting or exceeding the the D/M/WBE participation amounts in its Contractor Utilization Plan (CUP) as amended by any previously approved Request for Modification/Substitution. Any Change Orders or amendements modifying the amount CONTRACTOR is to be compensated will have correspondingly impacted the amount of compensation due D/M/WBEs for purposes of meeting or exceeding the Bidder/Proposer participation. CONTRACTOR is again advised to consider the effect of any Change Order or amendment, and to submit a Request for Modification/Substitution if appropriate.

M/WBE Monthly Compliance Audit Online Reporting Instructions

PRIME INSTRUCTIONS:

The Prime's responsibility is to report payments made to subcontractors for the prior month.

1. Log into B2GNow Diversity Management System (B2GNow)
2. On the Dashboard, click Contract Audits.
3. Select the specific audit that needs to be completed. Any and all money that changed hands during the month of the audit must be reported to the specific audit month.
4. To complete audit select Report 1 Subcontractor Payment. Under the actions column, select Submit Response for the specific subcontractor that needs reporting or select the Submit ALL Incomplete Records button to go to all the subcontractors to report amounts. Under the audit information answer the following questions:

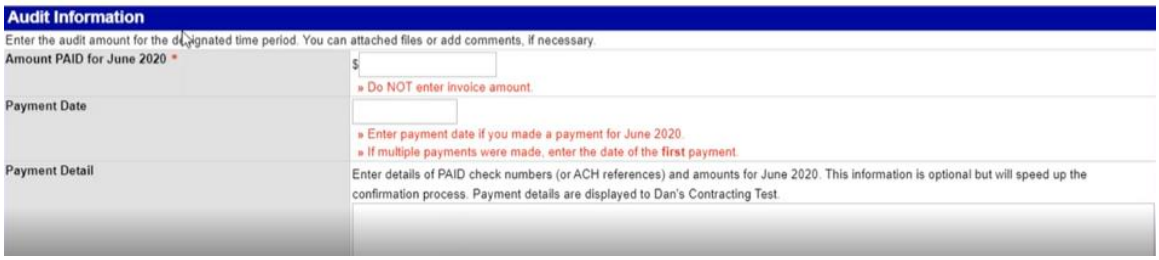

Once information has been entered, select review and save. Complete same steps for all subcontractors. If there were subcontractors that did not receive a payment for the specific audit month, click the Mark Remaining Subcontractors as Zero button to mark remaining subcontractors as 0.

SUBCONTRACTOR INSTRUCTIONS:

The responsibility of the Subcontractor is to confirm payment received for specific audit month.

1. Log in to B2GNow Diversity Management System (B2GNow)
2. On the Dashboard, select Contract Audits.
3. Select the specific audit that needs to be completed.
4. To complete audit, select Confirm Payment Received. There will be two options: correct or incorrect. Select correct if payment was in fact received OR if payment was not received or amount was different select incorrect. Answer all questions and select save to complete.

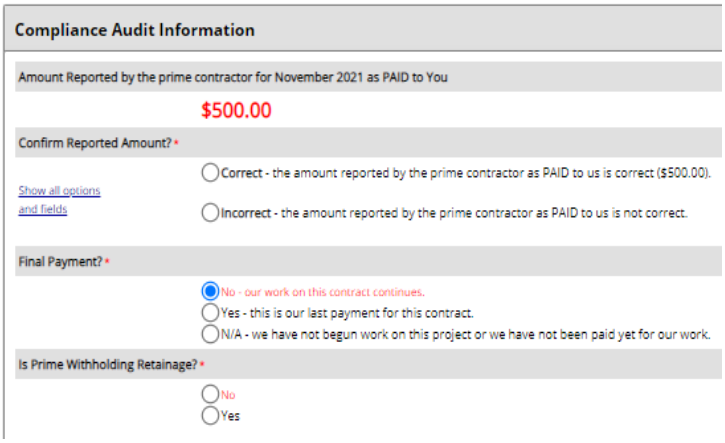

NOTE: Complete one M/WBE report per project.

An email notice will be sent from our organization monthly to notify Prime & Subcontractor users of incomplete audits.

Project Specific Monthly Report

Human Relations Department - City of Kansas City Missouri

Report Date:		Reporting Period:		Project Description:	
Project Name:		Contractor:		Contract Awarded Date:	
City Project Number:		Contractor Address:		City Contract Number:	
Project Address:				City Vendor ID:	
		Contact Person/Phone:		Contractor Report ☐	Subcontractor Report ☐
E-mail Address:				Final Cumulative Report:	☐ Yes ☐ No

Report the total monthly hours of work performed by all workers on the City Construction Contract. Enter the total hours on all lines and in all columns. workforce hours should be based on payroll records. Reported

JOB CATEGORIES	OVERALL TOTAL (Sum of all Columns, A thru F Male & Female)	A Total Hours White Employees		B Total Hours Black Employees		C Total Hours Hispanic Employees		D Total Hours Asian/Pacific Islander		E Total Hours Native American Employee		F Total Hours Other/Unknown Race Employee		G KCMO Resident Hours
		M	F	M	F	M	F	M	F	M	F	M	F	Total #
Foreman/Supervisor														
Asbestos Worker Journeyman														
Asbestos Worker Apprentice														
Boilermaker Journeyman														
Boilermaker Apprentice														
Bricklayer Journeyman														
Bricklayer Apprentice														
Carpenter Journeyman														
Carpenter Apprentice														
Cement Mason Journeyman														
Cement Mason Apprentice														
Electrician Journeyman														
Electrician Apprentice														
Elevator Constructor Journeyman														
Elevator Constructor Apprentice														
Glazier Journeyman														
Glazier Apprentice														
Iron Worker Journeyman														
Iron Worker Apprentice														
Laborer Journeyman														
Laborer Apprentice														
Operating Engineer Journeyman														
Operating Engineer Apprentice														
Painter Journeyman														
Painter Apprentice														
Pipe Fitter/Plumber Journeyman														
Pipe Fitter/Plumber Apprentice														
Plasterer Journeyman														
Plasterer Apprentice														
Roofer Journeyman														
Roofer Apprentice														
Sheet Metal Journeyman														
Sheet Metal Apprentice														
Sprinkler Fitter														
Sprinkler Fitter Apprentice														
Truck Driver Journeyman														
Truck Driver Apprentice														
Welder Journeyman														
Welder Apprentice														
Other														
Monthly Total Hours														-
Total % of Monthly Hrs.														

Contractor shall submit report by the 15th of each month.

Phillip Yelder, Director Human Relations Department
414 E. 12th Street, 4th Floor Kansas City, MO 64106
Phone: 816-513-1836 Email HRDcontractcompliance@kcmo.org

Report Submitted By: _____

Date: _____

Workforce Monthly Report Forms only apply to Construction Contracts greater than $300,000.00 with greater than 800 projected labor hours.

Workforce Monthly Report Instructions

(Instructions for online reporting)

Completing a Workforce Audit:
To report your workforce hours:
1. Log into B2GNow Diversity Management System (B2GNow)
2. Click on the red underlined number of 'Incomplete audits' under Workforce Audits
3. Click View for the incomplete audit that needs to be completed.
4. Click Fill in Audit
5. Complete the form including the Payroll Number. Select Add to Audit to report hours worked for specific Craft/Trade.

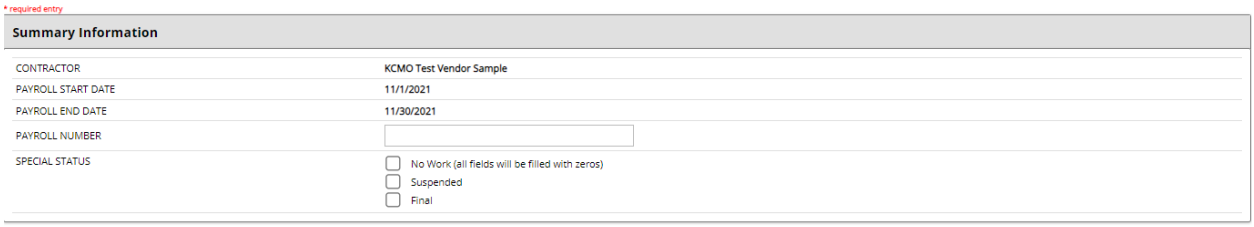

* required entry

Summary Information

CONTRACTOR	KCMO Test Vendor Sample
PAYROLL START DATE	11/1/2021
PAYROLL END DATE	11/30/2021
PAYROLL NUMBER	
SPECIAL STATUS	☐ No Work (all fields will be filled with zeros) ☐ Suspended ☐ Final

Enter values below as hours worked. There is no need to fill in zeros; all blank fields will be saved as zero.

Craft/Trade List

Craft/Trade	Caucasian		Black/African American		Hispanic/Latino		Asian		Native American		Other/Unknown Ethnicity		Local Resident	Comments
	Male	Female	Male	Female	Male	Female	Male	Female	Male	Female	Male	Female		
Foreman/Supervisor								Not included in audit Add to audit						
Asbestos Worker (Journeyman)								Not included in audit Add to audit						

6. Scroll down and select review once hours have been reported.
7. Save and Certify to submit OR Save but Certify Later (to save a draft of your audit response). Audit must be certified for the workforce audit to be submitted for review. If there is an audit where no work was performed, and have 0 hours to report, select the Mark as No Work Audit button on step 4 to report 0 hours for all your employees. Select Certify & Release to Organization to complete. Mark Final for Special Status if the audit being completed is the last month of work, this will notify the system to stop generating monthly audits.

NOTE: If subcontractor has completed Workforce Audit, Prime MUST either accept audit and release to the organization or reject audit back to Subcontractor for correction.

An email notice will be sent from our organization monthly to notify Prime & Subcontractor users of incomplete audits.

Company-Wide Workforce Monthly Report

Human Relations Department - City of Kansas City, Missouri

Report Date:		Reporting Period:		Contract Awarded Date:	
Contractor:				City Vendor ID:	
Contact Person/Phone:		Contractor Address:		Contractor Report ☐	Subcontractor Report ☐
E-mail Address:		Have you hired any new construction workers this month?	☐ Yes ☐ No #:	Final Cumulative Report:	☐ Yes ☐ No

Report total of all hours of work performed company-wide on all projects in the KCMO Metropolitan Statistical Area (MSA). Enter the total hours on all lines and in all columns. Workforce hours should be based on payroll records.

JOB CATEGORIES	OVERALL TOTAL (Sum of all Columns, A thru F Male & Female)	A Total Hours White Employees		B Total Hours Black Employees		C Total Hours Hispanic Employees		D Total Hours Asian/Pacific Islander		E Total Hours Native American Employee		F Total Hours Other/Unknown Race Employee		G KCMO Resident Hours
		M	F	M	F	M	F	M	F	M	F	M	F	Total #
Foreman/Supervisor														
Asbestos Worker Journeyman														
Asbestos Worker Apprentice														
Boilermaker Journeyman														
Boilermaker Apprentice														
Bricklayer Journeyman														
Bricklayer Apprentice														
Carpenter Journeyman														
Carpenter Apprentice														
Cement Mason Journeyman														
Cement Mason Apprentice														
Electrician Journeyman														
Electrician Apprentice														
Elevator Constructor Journeyman														
Elevator Constructor Apprentice														
Glazier Journeyman														
Glazier Apprentice														
Iron Worker Journeyman														
Iron Worker Apprentice														
Laborer Journeyman														
Laborer Apprentice														
Operating Engineer Journeyman														
Operating Engineer Apprentice														
Painter Journeyman														
Painter Apprentice														
Pipe Fitter/Plumber Journeyman														
Pipe Fitter/Plumber Apprentice														
Plasterer Journeyman														
Plasterer Apprentice														
Roofer Journeyman														
Roofer Apprentice														
Sheet Metal Journeyman														
Sheet Metal Apprentice														
Sprinkler Fitter														
Sprinkler Fitter Apprentice														
Truck Driver Journeyman														
Truck Driver Apprentice														
Welder Journeyman														
Welder Apprentice														
Other														
Total Monthly Hours														-
Total % of Hours														

Contractor shall submit report by the 15th of each month.

Phillip Yelder, Director Human Relations Department
414 E. 12th Street, 4th Floor, Kansas City, MO 64106
Phone: 816-513-1836 Email HRDcontractcompliance@kcmo.org

Report Submitted By: _____

Date: _____

City of Kansas City, Missouri
Civil Rights & Equal Opportunity Department
Construction Contractor Employee Identification Report

Company Name: _____ **Prime's Name:** _____

Company Address: _____ **KCMO Project Name:** _____

Company City, State, Zip: _____ **KCMO Project Number:** _____

Name of Person Completing Report: _____ **Today's Date:** _____

Phone Number: _____

Email: _____ **City Department:** _____

Instructions:

1) Each applicable Prime Contractors **must complete this form for its company within 48 hours of bid opening**
2) The Civil Rights & Equal Opportunity Department strongly recommends usage of the electronic version of this form. This form may be obtained by visiting www.kcmo.gov website. The website is enabled with a "search" function on the Home page on the right corner. Select the magnifying glass and type in the search field "Contract Central". Select the first result, then click on the link to Standard City Contract Forms. Scroll down to Construction Contractor Employee Identification Report and click the link to open this document. Complete the fields in the Employee section; the Official Use Only section will automatically populate. NOTE: This form can be printed and attached to other required Bid documents.
3) All subcontractors shall be required to complete this form and submit to the Prime Contractor. For each subcontractor, the Prime must submit this form to City at least at least (10) days prior to the date the subcontractor shall commence work under a city construction contract.
4) Complete this form if you are the Prime contractor on a City construction project estimated over **$300,000 & over 800 man hours.**
5) Complete this form with data from your **current construction workforce** (no office personnel).
6) Prime contractor is responsible to ensure subcontractor completes this form as required in #3 above.

Official Use Only

Females		*KCMO Resident*
African American	*0*	*0*
Asian/Pacific Islander American	*0*	*0*
Caucasian American	*0*	*0*
Hispanic/Latino American	*0*	*0*
Native American	*0*	*0*
Other	*0*	*0*
	0	*0*

Males		*KCMO Resident*
African American	######	*0*
Asian/Pacific Islander American	######	*0*
Caucasian American	######	*0*
Hispanic/Latino American	######	*0*
Native American	######	*0*
Other	######	*0*
	######	*0*

Number of KCMO Residents	*0*
Number of Journeyman	*0*
Number of Apprentice	*0*

	Journeyman	*Apprentice*
Foreman/Supervisor	*0*	--
Asbestos Worker	*0*	*0*
Boilermaker	*0*	*0*
Bricklayer	*0*	*0*
Carpenter	*0*	*0*
Cement Mason	*0*	*0*
Electrician	*0*	*0*
Elevator Constructor	*0*	*0*
Glazier	*0*	*0*
Iron Worker	*0*	*0*
Laborer	*0*	*0*
	0	0

	Journeyman	*Apprentice*
Operating Engineer	*0*	*0*
Painter	*0*	*0*
Pipe Fitter/Plumber	*0*	*0*
Plasterer	*0*	*0*
Roofer	*0*	*0*
Sheet Metal	*0*	*0*
Sprinkler Fitter	*0*	*0*
Truck Driver	*0*	*0*
Welder	*0*	*0*
Other	*0*	--
	0	*0*

Company Name: 0 KCMO Project Name: 0 KCMO Project Number: 0

	Name		Job Title (*use drop down menu*)	Address	City	State	Zip Code	KCMO Resident	Gender	Ethnicity
	Last	First								
1										
2										
3										
4										
5										
6										
7										
8										
9										
10										
11										
12										
13										
14										
15										

Company Name: 0 KCMO Project Name: 0 KCMO Project Number: 0

	Name		Job Title (*use drop down menu*)	Address	City	State	Zip Code	KCMO Resident	Gender	Ethnicity
	Last	First								
16										
17										
18										
19										
20										
21										
22										
23										
24										
25										
26										
27										
28										
29										
30										
31										
32										
33										
34										
35										
36										
37										
38										
39										
40										
41										
42										
43										
44										
45										
46										
47										
48										
49										

Company Name: 0 KCMO Project Name: 0 KCMO Project Number: 0

	Name		Job Title (*use drop down menu*)	Address	City	State	Zip Code	KCMO Resident	Gender	Ethnicity
	Last	First								
50										
51										
52										
53										
54										
55										
56										
57										
58										
59										
60										
61										
62										
63										
64										
65										
66										
67										
68										
69										
70										
71										
72										
73										
74										
75										
76										
77										
78										
79										
80										
81										
82										
83										

AFFIDAVIT OF TRAINING PROGRAM

This form must be submitted with 48 hours of Bid Opening

Bidder _____

Project Title and Number _____

STATE OF MISSOURI)
) ss:
COUNTY OF _____)

After being duly sworn the person whose name and signature appears below hereby states under penalty of perjury that:

1. I am the duly authorized officer of the business indicated above ("Bidder") and I make this affidavit on behalf of Bidder.
2. Bidder certifies that it presently participates in a training program that facilitates entry into the construction industry and which may include an on-the-job or in-house training program, further described as follows:

(attach additional pages, if necessary)

3. If requested by the City, Bidder agrees to provide City further documentation of, or other information about, this training program within 48 hours of the request.
4. Bidder acknowledges that failure to submit this form to the City within 48 hours of the Bid Opening will automatically render its bid non-responsive.

I am authorized to make this Affidavit on behalf of the Bidder named below as:

_____ of _____
(Title) (Name of Bidder)

Dated: _____ By: _____
(Affiant)

Subscribed and sworn to before me this _____ day of _____, 20____.

My Commission Expires: _____ _____
Notary Public

AFFIRMATIVE ACTION PROGRAM AFFIDAVIT
(required for any contractor with 50 or more employees and
a contract with the City of Kansas City, Missouri, in excess of $300,000.00)

STATE OF _____)
) ss
COUNTY OF _____)

On this _____ day of _____, 20___, before me appeared _____, personally known by me or otherwise proven to be the person whose name is subscribed on this affidavit and who, being duly sworn, stated as follows:

I am of sound mind, capable of making this affidavit, and personally swear or affirm that the statements made herein are truthful to the best of my knowledge. I am the _____ (title) of _____ (business entity) and I am duly authorized, directed or empowered to act with full authority on behalf of the business entity in making this affidavit.

I hereby swear or affirm that [*enter business entity name*] has an affirmative action program (the "Program") in place and will maintain the Program for the duration of its contract with the City of Kansas City, Missouri ("City") as required by Chapter 3 of the City's Code of Ordinances.

I hereby additionally swear or affirm that attached hereto is a true copy of the Program.

I hereby additionally swear or affirm that the business entity shall not discriminate against any employee or applicant for employment because of race, color, sex, religion, national origin or ancestry, disability, sexual orientation, gender identity or age in a manner prohibited by Chapter 3 of the City's Code of Ordinances.

I acknowledge that I am signing this affidavit as the free act and deed of the business entity and that I am not doing so under duress.

_____
Affiant's signature

Subscribed and sworn to before me this _____ day of _____, 20____.

_____
Notary Public

My Commission expires:

Civil Rights and Equal Opportunity Department
Civil Rights and Wage Assurances

Non-discrimination in Employment. Contractor shall not discriminate against any employee or candidate for employment on the basis of an individual's race, hair texture or hair style associated with an individual's race, color, sex, religion, national origin, or ancestry, disability, sexual orientation, gender identity, age, or in any other manner prohibited by Chapter 38 of the City Code. Contractor shall not engage in any discrimination as prohibited by Chapter 3 of the City Code.

Ban the Box in Hiring and Promotion.

(a) Pursuant to Section 38-104, City Code Ordinances, Contractor shall not base a hiring or promotional decision on an applicant's criminal history or sentence related thereto, unless the employer can demonstrate that the employment-related decision was based on all information available including consideration of the frequency, recentness and severity of a criminal record and that the record was reasonably related to the duties and responsibilities of the position.

(b) Notwithstanding subsection (a), Contractor may inquire about an applicant's criminal history after it has been determined that the individual is otherwise qualified for the position, and only after the applicant has been interviewed for the position. Any such inquiry may be made of all applicants who are within the final selection pool of candidates from which a job will be filled.

(c) This provision shall not apply to positions where employers are required to exclude applicants with certain criminal convictions from employment due to local, state or federal law or regulation.

Title VI of the Civil Rights Act of 1964. Title VI of the Civil Rights Act of 1964 requires that no person in the United States shall, on the grounds of race, color, or national or origin (including limited English proficient individuals), be excluded from participation in, be denied the benefits of, or be subjected to discrimination under any program or activity receiving federal financial assistance. The City of Kansas City, Missouri requires compliance with the requirements of Title VI in all of its programs and activities regardless of the funding source.
Contractor shall not discriminate on the grounds of race, color, or national or origin (including limited English proficient individuals).

Quality Services Assurance Act. If this Contract exceeds $160,000.00, Contractor certifies Contractor will pay all employees who will work on this Contract in the city limits of Kansas City, Missouri at least $15.00 per hour in compliance with the City's Quality Services Assurance Act,

Section 3-66, Code of Ordinances or City has granted Contractor an exemption pursuant to the Quality Services Assurance Act.

Anti-Discrimination Against Israel. If this Contract exceeds $100,000.00 and Contractor employs at least ten employees, pursuant to Section 34.600, RSMo., by executing this Contract, Contractor certifies it is not currently engaged in and shall not, for the duration of this contract, engage in a boycott of goods or services from the State of Israel; companies doing business in or with Israel or authorized by, licensed by, or organized under the laws of the State of Israel; or persons or entities doing business in the State of Israel.

Affirmative Action. If this Contract exceeds $300,000.00 and Contractor employs fifty (50) or more people, Contractor shall comply with City's Affirmative Action requirements in accordance with the provisions of Chapter 3 of City's Code, the rules and regulations relating to those sections, and any additions or amendments thereto; in executing any Contract subject to said provisions, Contractor warrants that it has an affirmative action program in place and will maintain the affirmative action program in place for the duration of the Contract. Contractor shall not discriminate against any employee or applicant for employment because of race, color, sex, religion, national origin or ancestry, disability, sexual orientation, gender identity or age in a manner prohibited by Chapter 3 of City's Code. Contractor shall:

(a) Execute and submit the City of Kansas City, Missouri CREO Affirmative Action Program Affidavit warranting that the Contractor has an affirmative action program in place and will maintain the affirmative action program in place for the duration of the Contract.

(b) Submit, in print or electronic format, a copy of Contractor's current certificate of compliance to the City's Civil Rights and Equal Opportunity Department (CREO) prior to receiving the first payment under the Contract, unless a copy has already been submitted to CREO at any point within the previous two (2) calendar years. If, and only if, Contractor does not possess a current certification of compliance, Contractor shall submit, in print or electronic format, a copy of its affirmative action program to CREO prior to receiving the first payment under the Contract, unless a copy has already been submitted to CREO at any point within the previous two (2) calendar years.

(c) Require any Subcontractor awarded a subcontract exceeding $300,000.00 to affirm that Subcontractor has an affirmative action program in place and will maintain the affirmative action program in place for the duration of the subcontract.

(d) Obtain from any Subcontractor awarded a subcontract exceeding $300,000.00 a copy of the Subcontractor's current certificate of compliance and tender a copy of the same, in print or

electronic format, to CREO within thirty (30) days from the date the subcontract is executed. If, and only if, Subcontractor does not possess a current certificate of compliance, Contractor shall obtain a copy of the Subcontractor's affirmative action program and tender a copy of the same, in print or electronic format, to CREO within thirty (30) days from the date the subcontract is executed.

City has the right to take action as directed by City's Civil Rights and Equal Opportunity Department to enforce this provision. If Contractor fails, refuses or neglects to comply with the provisions of Chapter 3 of City's Code, then such failure shall be deemed a total breach of this Contract and this Contract may be terminated, cancelled or suspended, in whole or in part, and Contractor may be declared ineligible for any further contracts funded by City for a period of one (1) year. This is a material term of this Contract.

Compliance with Laws. Contractor shall comply with all federal, state and local laws, ordinances and regulations applicable to the work and this Agreement. Contractor shall maintain in effect all the licenses, permissions, authorizations, consents and permits that it needs to carry out its obligations under this Agreement.

Prevailing Wage. If the Agreement exceeds $75,000.00 and any of the Services performed by Contractor includes construction, reconstruction, improvement, enlargement, alteration, painting and decorating, or major repair, that is subject to the Missouri Prevailing Wage Law (Section 290.210, RSMo – 290.340, RSMo), Contractor shall immediately notify the City prior to performing Services so the parties can execute an agreement that incorporates, the appropriate Wage Order. Contractor shall comply with all requirements of Section 290.210, RSMo – 290.340, RSMo even if Contractor fails to notify
the City.

CITY OF FOUNTAINS
HEART OF THE NATION
KANSAS CITY
MISSOURI

CREO KC Contract Close-Out Approval

Date: _____

To: _____, Civil Rights & Equal Opportunity Department

From: _____, _____ Department

Subject: Contract/Project No.: _____

Project Title: _____

Type:	☐ Original	☐ Amendment No. _____ (See Contract Summary on the next page.)	■
Funding:	☐ City (MBE/WBE/DBE) ☐ Federal (DBE)[1] ☐ State (DBE)[1] - Grant _____ ☐ Other:		
Contract Category:	☐ Construction[2] ☐ General Service ☐ Facility Repair ☐ Design Professional[3] ☐ Professional Services ☐ Concession ☐ Other:		
Company:		NOTE: Attach:	

☐ M/WBE Participation - Documentation Attached [*Not required for DBE or MBE/WBE Participation under a Granting Agency Program. i.e. MoDOT, DNR, FAA, EPA, etc.*]

- Copy of Invoice or Construction Payment Application Packet
- Copy of the most recent 00485.01 or on-line M/WBE Monthly Utilization Report Contractor has submitted
- Contractor's Affidavit of Final Payment
- Subcontractors' Affidavits for Final Payment

☐ Prevailing Wage

☐ Workforce Program

cc: Project Manager

FOR CIVIL RIGHTS & EQUAL OPPORTUNITY DEPARTMENT USE ONLY

D/M/WBE Participation

☐ Applicable – No LD's ☐ Applicable – LD's assessed $_____ ☐ Not Applicable

_____ _____

Civil Rights & Equal Opportunity Department Date

Prevailing Wage

☐ Applicable – No LD's/penalties ☐ Applicable – LD's/penalties assessed $_____ ☐ Not Applicable

_____ _____

Civil Rights & Equal Opportunity Department Date

Workforce Program

☐ Applicable – No LD's ☐ Applicable – LD's assessed $_____ ☐ Not Applicable

_____ _____

Civil Rights & Equal Opportunity Department Date

[1] DBE Programs apply to specific federal or state grant requirements.

[2] Construction – Only Contracts Executed after 1/1/2008

[3] Non-Construction – Only Contracts Executed after 7/8/09

CITY OF FOUNTAINS
HEART OF THE NATION
KANSAS CITY
MISSOURI

Pre-Contract Bidder's Certification

Project Number 80002336/9663

Project Title Water Main Replacement in the Area of College Avenue to Norton Avenue from E 21st Street to E 31st Street

---

STATE OF)
) SS
COUNTY OF)

Before me, the undersigned authority, personally appeared, who, being by me duly sworn deposed as follows:

I am authorized to make this affidavit on behalf of the named Bidder. I am of sound mind, capable of making this affidavit, and personally acquainted with the facts herein stated:

A. Bidder is current on payment of its Federal and State Income tax withholding and unemployment insurance payments, either in Missouri for companies doing business in Missouri, or in the state in which Bidder has its principal office; and

B. Bidder declares one of the following, regarding all work performed two (2) years immediately preceding the date of the Bid (check one):

☐ Contract by contract listing of all of Bidder's written notices of violations of any Federal or State prevailing wage statute in which prevailing wage penalties were assessed against the Bidder or paid by the Bidder (Complete and attach additional sheets if necessary):

1. _____
2. _____
3. _____

☐ There have been no written notices of violations of any Federal or State prevailing wage statute in which prevailing wage penalties were assessed against the Bidder or paid by the Bidder.

C. Bidder is currently in good standing with the Missouri Secretary of State or Bidder has filed a Registration of Fictitious Name with the Missouri Secretary of State.

_____
(Bidder's Name) (Date)

Signature of Person Making This Affidavit

In witness whereof, I have hereunto subscribed my name and affixed my official seal this ___day of , 20__.

CITY OF FOUNTAINS
HEART OF THE NATION
KANSAS CITY
MISSOURI

CONTRACT REQUIRED SUBMISSIONS

Project/Contract Numbers: _____

Project Title: _____

These instructions are to assist the Contractor in providing all necessary documents to enter into a contract with the City.

MISSOURI SECRETARY OF STATE BUSINESS ENTITY REGISTRATION

- ☐ For a corporation, current Certificate of Good Standing from the Missouri Secretary of State (816) 889-2925 or (816) 889-2926 or a web site print-out, dated no more than ninety (90) days before the date furnished to the City – One Copy.
- ☐ For a business that is not a corporation and not doing business in the exact name of the proprietor, a copy from the Secretary of State, ((816) 889-2925 or (816) 889-2926 of the filed Registration of Fictitious Name dated no more than ninety (90) days before the date furnished to the City – One Copy.

EMPLOYEE ELIGIBILITY VERIFICATION AFFIDAVIT [Required if the contract exceeds $5,000.00]

- ☐ 00515.01 Employee Eligibility Verification Affidavit – One Executed Affidavit
- ☐ First and last pages of the E-Verify Program Memorandum of Understanding that your company has received from the U.S. Department of Homeland Security verifying enrollment in the program. For assistance, contact E-Verify Operations at 888-464-4218 – One Copy.

SUBCONTRACTORS LISTING [Applicable form provided]

- ☐ Non-Construction Subcontractors List – One Copy
- ☐ 01290.09 Subcontractors & Major Material Suppliers List – One Copy

PAYMENT BONDS (If applicable)

- ☐ Each copy of the Payment bond must be signed and properly dated by the following, as applicable:

  Corporation - A corporate officer authorized to sign on behalf of the corporation and the signature must be attested by a witness to the signature; OR

  Limited Liability Company - A member of the limited liability company authorized to sign on behalf of the company and a witness to the signature must attest the signature; OR

  Partnership - A partner authorized to sign on behalf of the partnership and the signature must be attested by a witness to the signature; OR

  Sole Proprietor - By the proprietor and the signature must be attested by a witness to the signature; OR

  Joint Venture - The parties to the Joint Venture authorized to sign on behalf of each party to the Joint Venture, or a person authorized by each party to the Joint Venture to sign on behalf of all parties to the Joint Venture; AND

  Surety - A person authorized by the Surety to sign on behalf of the Surety. A power of attorney issued by the Surety Company authorizing its representative to sign the Agreement must be attached to the Agreement and each copy.

PERFORMANCE AND MAINTENANCE BOND (If applicable)

- ☐ As applicable, each copy of the Performance and Maintenance bond must be signed and properly dated by:

  Corporation - A corporate officer authorized to sign on behalf of the corporation and the signature must be attested by a witness to the signature; OR

  Limited Liability Company - A member of the limited liability company authorized to sign on behalf of the company and a witness to the signature must attest the signature; OR

  Partnership - A partner authorized to sign on behalf of the partnership and the signature must be attested by a witness to the signature; OR

  Sole Proprietor - By the proprietor and the signature must be attested by a witness to the signature; OR

  Joint Venture - The parties to the Joint Venture authorized to sign on behalf of each party to the Joint Venture, or a person authorized by each party to the Joint Venture to sign on behalf of all parties to the Joint Venture; AND

  Surety - A person authorized by the Surety to sign on behalf of the Surety. A power of attorney issued by the Surety Company authorizing its representative to sign the Agreement must be attached to the Agreement and each copy.

CERTIFICATES OF INSURANCE [Sample form provided] - If you have any questions regarding requirements for insurance certificates, please contact the City's Risk Management Office, 816 513-1299.

- ☐ Provide a certificate of insurance for all insurance that may be required in the contract such as:

  Commercial General Liability
  Workers' Compensation and Employers' Liability
  Commercial Automobile Liability
  Property Insurance

- ☐ List the NAIC Number (National Association of Insurance Commissioners) or A.M. Best Number for each Insurer listed on the Certificate of Insurance.

- ☐ Certificate "Kansas City, Missouri" must be named as an Additional Insured.

- ☐ Check the insurance requirements of the Contract. If Contract Documents require that other entities be included as additional insureds, each entity shall be listed on the certificate(s).

- ☐ Description of Operations must include Project/Contract Number and Project/Contract Title/Description as contained in the Contract Documents. The Certificate Holder and address block shall be completed as follows:

  City of Kansas City, Missouri
  Water Services Department
  Davis McDonald-MacLin, Project Manager
  4800 E. 63rd Street
  Kansas City, Missouri 64130

- ☐ If your insurance agent prepares an ACORD form, the automobile insurance must be "any auto" or better for acceptance by the City.

AFFIRMATIVE ACTION REQUIREMENTS

- ☐ Proposed Affirmative Action Program or a copy of a Certificate of Affirmative Action Compliance – One copy.

PRE-CONTRACT BIDDER'S CERTIFICATION (Prevailing Wage Contracts; Form provided)

- ☐ Submit form 00490 - Bidder's Pre-Contract Certification (provided).

HEALTH AND SAFETY PLAN (If applicable)

- ☐ Bidder's Health and Safety Plan – One copy or one CD Rom.

EMPLOYEE ELIGIBILITY VERIFICATION AFFIDAVIT
(Required for any contract with the City of Kansas City, Missouri in excess of $5,000.00)

STATE OF _____)
) ss
COUNTY OF _____)

On this _____ day of _____, 20___, before me appeared _____, personally known by me or otherwise proven to be the person whose name is subscribed on this affidavit and who, being duly sworn, stated as follows:

I am of sound mind, capable of making this affidavit, and personally swear or affirm that the statements made herein are truthful to the best of my knowledge. I am the _____ (title) of _____ (business entity) and I am duly authorized, directed or empowered to act with full authority on behalf of the business entity in making this affidavit.

I hereby swear or affirm that the business entity does not knowingly employ any person in connection with the contracted services who does not have the legal right or authorization under federal law to work in the United States as defined in 8 U.S.C. § 1324a(h)(3).

I hereby additionally swear or affirm that the business entity is enrolled in an electronic verification of work program operated by the United States Department of Homeland Security (E-Verify) or an equivalent federal work authorization program operated by the United States Department of Homeland Security to verify information of newly hired employees, under the Immigration Reform and Control Act of 1986, and that the business entity will participate in said program with respect to any person hired by the business entity to perform any work in connection with the contracted services. I have attached hereto documentation sufficient to establish the business entity's enrollment and participation in the required electronic verification of work program.

I am aware and recognize that unless certain contractual requirements are satisfied and affidavits obtained as provided in Section 285.530, RSMo, the business entity may face liability for violations committed by its subcontractors, notwithstanding the fact that the business entity may itself be compliant.

I acknowledge that I am signing this affidavit as the free act and deed of the business entity and that I am not doing so under duress.

_____
Affiant's signature

Subscribed and sworn to before me this _____ day of _____, 20____.

_____
Notary Public

My Commission expires:

Reset Form | Print Form

Form **5060**

Missouri Department of Revenue
Project Exemption Certificate

This form is to be completed and given to your contractor.

Exempt Entity and Project Information

Name of Exempt Entity Issuing the Certificate			Missouri Tax Exemption Number
Address	City	State	ZIP Code
E-mail Address			
Project Number	Project Begin Date (MM/DD/YYYY) ___ ___ / ___ ___ / ___ ___ ___ ___	Estimated Project End Date (MM/DD/YYYY) ___ ___ / ___ ___ / ___ ___ ___ ___	
Description of Project			
Project Location		Certificate Expiration Date (MM/DD/YYYY) ___ ___ / ___ ___ / ___ ___ ___ ___	

Provide a signed copy of this certificate, along with a copy of the exempt entity's Missouri Sales and Use Tax Exemption Letter to each contractor or subcontractor who will be purchasing tangible personal property for use in this project. It is the responsibility of the exempt entity to ensure the validity of the information on the certificate. The exempt entity must issue a new certificate if any of the information changes.

Signature of Authorized Exempt Entity	Printed Name of Authorized Exempt Entity	Date (MM/DD/YYYY) ___ ___ / ___ ___ / ___ ___ ___ ___

Contractor

The Missouri exempt entity named above hereby authorizes the purchase, without sales tax, of tangible personal property to be incorporated or consumed in the construction project identified herein and no other, pursuant to **Section 144.062, RSMo.** Under penalties of perjury, I declare that the above information and any attached supplement is true, complete, and correct.

Name of Purchasing Contractor	Signature of Contractor		Date (MM/DD/YYYY) ___ ___ / ___ ___ / ___ ___ ___ ___
Address	City	State	ZIP Code

Subcontractor

Contractors - Present this to your supplier in order to purchase the necessary materials tax exempt. Complete the Subcontractor portion if extending the certificate to your subcontractor. The contractor must sign the form in the space provided below.

Name of Purchasing Subcontractor			
Address	City	State	ZIP Code
Signature of Contractor	Contractor's Printed Name	Date (MM/DD/YYYY) ___ ___ / ___ ___ / ___ ___ ___ ___	

Form 5060 (Revised 08-2015)

Taxation Division
P.O Box 358
Jefferson City, MO 65105-0358

Phone: (573) 751-2836
Fax: (573) 522-1271
E-mail: salestaxexemptions@dor.mo.gov

Visit http://dor.mo.gov/business/sales/sales-use-exemptions.php for additional information.

State of Missouri

EXEMPTION FROM MISSOURI SALES AND USE TAX ON PURCHASES

Issued to:

CITY OF KANSAS CITY
414 E 12TH ST 3RD FLOOR
KANSAS CITY MO 64106

Missouri Tax ID Number: 12490466

Effective Date: 07/11/2002

Your application for sales/use tax exempt status has been approved pursuant to Section 144.030.1, RSMo. This letter is issued as documentation of your exempt status.

Purchases by your Agency are not subject to sales or use tax if within the conduct of your Agency's exempt functions and activities. When purchasing with this exemption, furnish all sellers or vendors a copy of this letter. This exemption may not be used by individuals making personal purchases.

A contractor may purchase and pay for construction materials exempt from sales tax when fulfilling a contract with your Agency only if your Agency issues a project exemption certificate and the contractor makes purchases in compliance with the provisions of Section 144.062, RSMo.

Sales by your Agency are subject to all applicable state and local sales taxes. If you engage in the business of selling tangible personal property or taxable services at retail, you must obtain a Missouri Retail Sales Tax License and collect and remit sales tax.

This is a continuing exemption subject to legislative changes and review by the Director of Revenue. If your Agency ceases to qualify as an exempt entity, this exemption will cease to be valid. This exemption is not assignable or transferable. It is an exemption from sales and use taxes only and is not an exemption from real or personal property tax.

Any alteration to this exemption letter renders it invalid.

If you have any questions regarding the use of this letter, please contact the Division of Taxation and Collection, P.O. Box 3300, Jefferson City, MO 65105-3300, phone 573-751-2836.

(DT6030)

CITY OF FOUNTAINS
HEART OF THE NATION

KANSAS CITY
MISSOURI

PERFORMANCE AND MAINTENANCE BOND

Project Number 80002336/9663
Project Title Water Main Replacement in the Area of College Avenue to Norton Avenue from E 21st Street to E 31st Street

---

KNOW ALL MEN BY THESE PRESENTS: That _____, as PRINCIPAL (CONTRACTOR), and _____, (SURETY), licensed to do business as such in the State of Missouri, hereby bind themselves and their respective heirs, executors, administrators, successors, and assigns unto Kansas City, Missouri, a constitutionally chartered municipal corporation, (OWNER), as obligee, in the penal sum of _____ Dollars ($ _____) for the payment whereof CONTRACTOR and SURETY bind themselves, their heirs, executors, administrators, successors and assigns, jointly and severally, firmly by these presents.

WHEREAS,

CONTRACTOR has entered into a Contract with OWNER for_____ which Contract, including any present or future amendment thereto, is incorporated herein by reference and is hereinafter referred to as the Contract.

NOW, THEREFORE, THE CONDITION OF THIS OBLIGATION is such that, if CONTRACTOR shall promptly and faithfully perform said Contract including all duly authorized changes thereto, and including any maintenance requirements contained therein, according to all the terms thereof, including those under which CONTRACTOR agrees to pay legally required wage rates including the prevailing hourly rate of wages in the locality, as determined by the Department of Labor and Industrial Relations or by final judicial determination, for each craft or type of workman required to execute the Contract and, further, shall defend, indemnify, and hold harmless OWNER from all damages, including but not limited to, liquidated damages, loss and expense occasioned by any failure whatsoever of said CONTRACTOR and SURETY to fully comply with and carry out each and every requirement of the Contract, then this obligation shall be void; otherwise, it shall remain in full force and effect.

WAIVER. That SURETY, for value received, hereby expressly agrees that no change, extension of time, alteration or addition to the terms of the Contract or to the Work to be performed thereunder, shall in any way affect the obligations of this Bond; and it does hereby waive notice of any such change, extension of time, or alteration or addition to the terms of the Contract or the Work to be performed thereunder.

IN WITNESS WHEREOF, the above parties have executed this instrument the ____ day of _____, 20__.

CONTRACTOR
Name, address and facsimile number of Contractor

_____
_____
_____
_____

I hereby certify that I have authority to execute
this document on behalf of Contractor.

By: _____
Title:_____

(Attach corporate seal if applicable)

SURETY
Name, address and facsimile number of Surety:

_____
_____
_____
_____

I hereby certify that (1) I have authority to execute this document on behalf of Surety; (2) Surety has an A.M. Best rating of A-, V, or better; (3) Surety is named in the current list of "Companies Holding Certificates of Authority as Acceptable Reinsuring Companies: as published in Circular 570 (most current revision) by the Financial Management Service, Surety Bond Branch, U.S. Department of the Treasury; and (4) Surety is duly licensed to issue bonds in the State of Missouri and in the jurisdiction in which the Project is located.

By:_____
Title:_____
Date:_____

(Attach seal and Power of Attorney)

CITY OF FOUNTAINS
HEART OF THE NATION

KANSAS CITY
MISSOURI

PAYMENT BOND

Project Number 80002336/9663
Project Title Water Main Replacement in the Area of College Avenue to Norton Avenue from E 21st Street to E 31st Street

---

KNOW ALL MEN BY THESE PRESENTS: That _____, as PRINCIPAL (CONTRACTOR), and_____, (SURETY), licensed to do business as such in the State of Missouri, hereby bind themselves and their respective heirs, executors, administrators, successors, and assigns unto Kansas City, Missouri, a constitutionally chartered municipal corporation, (OWNER), as obligee, in the penal sum of _____ Dollars ($_____) for the payment whereof CONTRACTOR and SURETY bind themselves, their heirs, executors, administrators, successors and assigns, jointly and severally, firmly by these presents.

WHEREAS,

CONTRACTOR has entered into a contract with OWNER for **Project/Contract Nos. 80002336/9663 Water Main Replacement in the Area of College Avenue to Norton Avenue from E 21st Street to E 31st Street Bid 2** which Contract, including any present or future amendment thereto, is incorporated herein by reference and is hereinafter referred to as the Contract.

NOW, THEREFORE, THE CONDITION OF THIS OBLIGATION is such that, if in connection with the Contract, including all duly authorized modifications thereto, prompt payment shall be made to all laborers, subcontractors, teamsters, truck drivers, owners or other suppliers or for equipment employed on the job, and other claimants, for all labor performed in such work whether done for CONTRACTOR, a subcontractor, SURETY, a completion contractor or otherwise (at the full wage rates required by any law of the United States or of the State of Missouri, where applicable), for services furnished and consumed, for repairs on machinery, for equipment, tools, materials, lubricants, oil, gasoline, water, gas, power, light, heat, oil, telephone service, grain, hay, feed, coal, coke, groceries and foodstuffs, either consumed, rented, used or reasonably required for use in connection with the construction of the work or in the performance of the Contract and all insurance premiums, both for compensation and for all other kinds of insurance on the work, for sales taxes and for royalties in connection with, or incidental to, the completion of the Contract, in all instances whether the claim be directly against CONTRACTOR, against SURETY or its completion contractor, through a subcontractor or otherwise, and, further, if CONTRACTOR shall defend, indemnify and hold harmless OWNER from all such claims, demands or suits by any such person or entity, then this obligation shall be void; otherwise, it shall remain in full force and effect.

Any conditions legally required to be included in a Payment Bond on this Contract, including but not limited to those set out in §107.170 RSMo.are included herein by reference.

SURETY agrees that, in the event that CONTRACTOR fails to make payment of the obligations covered by this Bond, it will do so and, further, that within forty-five (45) days of receiving, at the address given below, a claim hereunder stating the amount claimed and the basis for the claim in reasonable detail, it (a) will send an answer to the claimant, with a copy to OWNER stating the amounts that are undisputed and the basis for challenging any amounts that are disputed, and (b) will pay any amounts that are undisputed. The amount of this Bond shall be reduced by and to the extent of any payment or payments made in good faith hereunder.

While this Bond is in force, it may be sued on at the instance of any party to whom any such payment is due, in the name of OWNER to the use for such party. OWNER shall not be liable for the payment of any costs or expenses of any such suit.

No suit shall be commenced or pursued hereunder other than in a state court of competent jurisdiction in Jackson, Clay or Platte County, Missouri, or in the United States District Court for the Western District of

Missouri.

WAIVER. That SURETY, for value received, hereby expressly agrees that no change, extension of time, alteration or addition to the terms of the Contract or to the Work to be performed thereunder, shall in any way affect the obligations of this Bond; and it does hereby waive notice of any such change, extension of time, or alteration or addition to the terms of the Contract or the Work to be performed thereunder.

IN WITNESS WHEREOF, the above parties have executed this instrument the _____ day of_____ _____, 20____.

CONTRACTOR
Name, address and facsimile number of Contractor

_____
_____
_____
_____

I hereby certify that I have authority to execute
this document on behalf of Contractor.

By: _____
Title:_____

(Attach corporate seal if applicable)

SURETY
Name, address and facsimile number of Surety:

_____
_____
_____
_____

I hereby certify that (1) I have authority to execute this document on behalf of Surety; (2) Surety has an A.M. Best rating of A-. or better; (3) Surety is named in the current list of “Companies Holding Certificates of Authority as Acceptable Sureties on Federal Bonds and as Acceptable Reinsuring Companies” as published in Circular 570 (most current revision) by the Financial Management Service, Surety Bond Branch, U.S. Department of the Treasury; and(4) Surety is duly licensed to issue bonds in the State of Missouri and in the jurisdiction in which the Project is located.

By:_____
Title:_____
Date:_____

(Attach seal and Power of Attorney)

ACORD®

CERTIFICATE OF LIABILITY INSURANCE

DATE (MM/DD/YYYY)

THIS CERTIFICATE IS ISSUED AS A MATTER OF INFORMATION ONLY AND CONFERS NO RIGHTS UPON THE CERTIFICATE HOLDER. THIS CERTIFICATE DOES NOT AFFIRMATIVELY OR NEGATIVELY AMEND, EXTEND OR ALTER THE COVERAGE AFFORDED BY THE POLICIES BELOW. THIS CERTIFICATE OF INSURANCE DOES NOT CONSTITUTE A CONTRACT BETWEEN THE ISSUING INSURER(S), AUTHORIZED REPRESENTATIVE OR PRODUCER, AND THE CERTIFICATE HOLDER.

IMPORTANT: If the certificate holder is an ADDITIONAL INSURED, the policy(ies) must be endorsed. If SUBROGATION IS WAIVED, subject to the terms and conditions of the policy, certain policies may require an endorsement. A statement on this certificate does not confer rights to the certificate holder in lieu of such endorsement(s).

PRODUCER	CONTACT NAME:	
AGENT NAME AND ADDRESS	PHONE (A/C, No, Ext): / FAX (A/C, No):	
	E-MAIL ADDRESS:	
	INSURER(S) AFFORDING COVERAGE	NAIC #
	INSURER A : ABC INSURANCE COMPANY	
INSURED	INSURER B :	
CONTRACTOR NAME AND ADDRESS	INSURER C :	
	INSURER D :	
	INSURER E :	
	INSURER F :	

COVERAGES **CERTIFICATE NUMBER:** **REVISION NUMBER:**

THIS IS TO CERTIFY THAT THE POLICIES OF INSURANCE LISTED BELOW HAVE BEEN ISSUED TO THE INSURED NAMED ABOVE FOR THE POLICY PERIOD INDICATED. NOTWITHSTANDING ANY REQUIREMENT, TERM OR CONDITION OF ANY CONTRACT OR OTHER DOCUMENT WITH RESPECT TO WHICH THIS CERTIFICATE MAY BE ISSUED OR MAY PERTAIN, THE INSURANCE AFFORDED BY THE POLICIES DESCRIBED HEREIN IS SUBJECT TO ALL THE TERMS, EXCLUSIONS AND CONDITIONS OF SUCH POLICIES. LIMITS SHOWN MAY HAVE BEEN REDUCED BY PAID CLAIMS.

INSR LTR	TYPE OF INSURANCE	ADDL INSR	SUBR WVD	POLICY NUMBER	POLICY EFF (MM/DD/YYYY)	POLICY EXP (MM/DD/YYYY)	LIMITS	
A	GENERAL LIABILITY ☑ COMMERCIAL GENERAL LIABILITY ☐ CLAIMS-MADE ☑ OCCUR GEN'L AGGREGATE LIMIT APPLIES PER: ☐ POLICY ☑ PRO-JECT ☐ LOC	Y	Y	POLICY NUMBER	1/1/2011	Current	EACH OCCURRENCE DAMAGE TO RENTED PREMISES (Ea occurrence) MED EXP (Any one person) PERSONAL & ADV INJURY GENERAL AGGREGATE PRODUCTS - COMP/OP AGG	$ 1,000,000 $ 50,000 $ 10,000 $ 1,000,000 $ 2,000,000 $ 2,000,000 $
A	AUTOMOBILE LIABILITY ☑ ANY AUTO ALL OWNED AUTOS ☐ SCHEDULED AUTOS ☑ HIRED AUTOS ☑ NON-OWNED AUTOS	Y	Y	POLICY NUMBER	1/1/2011	Current	COMBINED SINGLE LIMIT (Ea accident) BODILY INJURY (Per person) BODILY INJURY (Per accident) PROPERTY DAMAGE (Per accident)	$ 1,000,000 $ $ $ $
A	☑ UMBRELLA LIAB ☑ OCCUR EXCESS LIAB ☐ CLAIMS-MADE DED ☑ RETENTION $ 10,000	Y	Y	POLICY NUMBER	1/1/2011	Current	EACH OCCURRENCE AGGREGATE	$ 2,000,000 $ 2,000,000 $
A	WORKERS COMPENSATION AND EMPLOYERS' LIABILITY ANY PROPRIETOR/PARTNER/EXECUTIVE OFFICER/MEMBER EXCLUDED? Y/N N (Mandatory in NH) If yes, describe under DESCRIPTION OF OPERATIONS below	N/A	Y	POLICY NUMBER	1/1/2011	Current	☑ WC STATU-TORY LIMITS ☐ OTH-ER E.L. EACH ACCIDENT E.L. DISEASE - EA EMPLOYEE E.L. DISEASE - POLICY LIMIT	 $ 1,000,000 $ 1,000,000 $ 1,000,000
A	Leased/Rented/Equip. Owned Equipment Builders Risk/Installation Floater	N/A	Y	POLICY NUMBER	1/1/2011	Current	Limit; Deductible Limit; Deductible Limit; Deductible	

DESCRIPTION OF OPERATIONS / LOCATIONS / VEHICLES (Attach ACORD 101, Additional Remarks Schedule, if more space is required)

Project No. _____ [Title]. Certholder (City) and _____ (Design Professional) and any other entities named in 00800 SCs are named as primary, noncontributing Additional Insureds including products and completed operations, excluding workers compensation, employers liability and professional liability. Waiver of subrogation applies as allowed by law. [The policies required above shall contain no exclusions for work expressly within the subcontractors scope of work.]

CERTIFICATE HOLDER

City of Kansas City, Missouri

_____ [Department]

_____ [Address]

Kansas City, MO _____ [Zip]

CANCELLATION

SHOULD ANY OF THE ABOVE DESCRIBED POLICIES BE CANCELLED BEFORE THE EXPIRATION DATE THEREOF, NOTICE WILL BE DELIVERED IN ACCORDANCE WITH THE POLICY PROVISIONS.

AUTHORIZED REPRESENTATIVE

© 1988-2010 ACORD CORPORATION. All rights reserved.

The ACORD name and logo are registered marks of ACORD

FORM **RD-C1**
(12/20)

City of Kansas City, Missouri - Revenue Division

AUTHORIZATION TO RELEASE A REVENUE CLEARANCE LETTER

Phone: (816) 513-1120
Fax: (816) 513-1264

KANSAS CITY MISSOURI

I authorize the City of Kansas City, Missouri, Finance Department, Revenue Division, to release a Revenue Clearance Letter for:

Name of taxpayer: _____ FEIN or SSN: _____
(PRINT)
Address: _____

Check this box and complete this section to send the Clearance Letter to a contractor.

☐ **I authorize the City to provide a copy of the Taxpayer's Revenue Clearance Letter to the following:**

NAME (PRINT)		BUSINESS NAME	TITLE
ADDRESS		CITY, STATE, ZIP CODE	
PHONE NUMBER	FAX NUMBER	EMAIL ADDRESS	

☐ **I authorize the City to provide the Taxpayer's Revenue Clearance Letter to all City Departments to certify that the Taxpayer is in compliance with the tax ordinances administered by the Commissioner of Revenue.**

Please send my first Revenue Clearance Letter to: _____
(Print Name of City Department / Contact Person / Email / Fax Number)

This authorization shall expire one (1) year from the date on the bottom of this form.

The City, Commissioner of Revenue and the Revenue Division personnel (hereinafter "the City"), are hereby held harmless from any and all liability relating to unauthorized disclosure of confidential tax information resulting from release of information under all applicable confidentiality laws including federal, state, or local, including any damages sustained by wrongful transmission of confidential tax information to any other person.

UNDER PENALTIES OF PERJURY, I DECLARE THAT I HAVE EXAMINED THIS AUTHORIZATION, AND TO THE BEST OF MY KNOWLEDGE AND BELIEF, IT IS TRUE, CORRECT AND COMPLETE.

I hereby certify that I am the Taxpayer named herein or that I have the authority to execute this authorization on behalf of the Taxpayer and hold harmless agreement.

NAME (PRINT)	TITLE (IF APPLICABLE)	
SIGNATURE	PHONE NUMBER	DATE

A FACSIMILE OF THIS DOCUMENT SHALL CONSTITUTE AN ORIGINAL

Email completed form to business.license@kcmo.org or mail to:

City of Kansas City, Missouri, Business License Office, City Hall, 1st floor, 414 E. 12th St., Kansas City, MO 64106

KANSAS CITY
MISSOURI

Finance Department

Revenue Division

414 E 12th St. 1st Floor
Kansas City, MO 64106-2786

DO NOT MAIL
atL003

Phone: (816) 513-1120
Fax: (816) 513-1264
Email: revenue@kcmo.org
Website: kcmo.gov/tax

Letter Id: L0000143555
Date: 07-Feb-2024
Taxpayer Id: 0000161779

EXAMPLE TAXPAYER
414 E 12TH ST
KANSAS CITY MO 64106-2702

TAX CLEARANCE STATUS: APPROVED

As of this date, this notice is to inform you that EXAMPLE TAXPAYER is current with all taxes and license fees with the City of Kansas City, Mo., Finance Department/ Revenue Division.

Please note this could change if we perform a full review of your accounts in the future. We will let you know if we need to review your accounts. You will need to pay any amounts that are found due at that time.

Eric Davison
Commissioner of Revenue

Visit kcmo.gov/quicktax to view the status of your account and for online filing.

GENERAL CONDITIONS

TABLE OF CONTENTS

ARTICLE 1 DEFINITIONS AND TERMINOLOGY

1.01 Defined Terms
1.02 Terminology

ARTICLE 2 PRELIMINARY MATTERS

2.01 Delivery of Bonds
2.02 Evidence of Insurance
2.03 Copies of Documents
2.04 Commencement of Contract Times; Notice to Proceed
2.05 Starting the Work
2.06 Before Starting Construction
2.07 Initially Acceptable Schedules

ARTICLE 3 CONTRACT DOCUMENTS: INTENT, AMENDING, REUSE

3.01 Intent
3.02 Reference to Standards and Specifications of Technical Societies
3.03 Reporting and Resolving Discrepancies
3.04 Amending and Supplementing Contract Documents
3.05 Reuse of Documents

ARTICLE 4 AVAILABILITY OF LANDS; SUBSURFACE AND PHYSICAL CONDITIONS; REFERENCE POINTS

4.01 Availability of Lands
4.02 Subsurface and Physical Conditions
4.03 Differing Subsurface or Physical Conditions
4.04. Physical Conditions - Underground Facilities
4.05 Reference Points
4.06 Asbestos, Lead-Based Paint, PCBs, Petroleum, Hazardous Waste or Radioactive Material

ARTICLE 5 BONDS AND INSURANCE

5.01 Performance, Payment and Other Bonds
5.02 Licensed Sureties and Insurers
5.03 Certificates of Insurance
5.04 CONTRACTOR's Liability Insurance
5.05 CITY's Liability Insurance
5.06 Property Insurance
5.07 Waiver of Rights
5.08 Receipt and Application of Insurance Proceeds
5.09 Partial Utilization - Property Insurance

ARTICLE 6 CONTRACTOR'S RESPONSIBILITIES

6.01 Indemnification

6.02 Supervision and Superintendence
6.03 Services, Working Hours, Labor, Materials and Equipment
6.04 Progress Schedule
6.05 Recovery Schedules
6.06 Substitutes and “Or-Equal” Items
6.07 Concerning Subcontractors, Suppliers and Others
6.08 Patent Fees and Royalties
6.09 Permits
6.10 Laws or Regulations
6.11 Taxes
6.12 Use of Site and Other Areas
6.13 Record Documents
6.14 Safety and Protection
6.15 Safety Representative
6.16 Hazard Communication Programs
6.17 Emergencies
6.18 Shop Drawings and Samples
6.19 Continuing the Work
6.20 CONTRACTOR’s General Warranty and Guarantee

ARTICLE 7 OTHER WORK

7.01 Related Work at Site
7.02 Coordination

ARTICLE 8 CITY’s RESPONSIBILITIES

8.01 Communications to CONTRACTOR
8.02 Replacement of DESIGN PROFESSIONAL
8.03 Furnish Data and Prompt Payment
8.04 Lands and Easements; Reports and Tests
8.05 Insurance
8.06 Change Orders
8.07 Inspections, Tests and Approvals
8.08 Limitations on CITY’s Responsibilities
8.09 Undisclosed Hazardous Environmental Condition
8.10 Evidence of Financial Arrangements
8.11 CITY’s Representative
8.12 Visits to Site

ARTICLE 9 DESIGN PROFESSIONAL’s STATUS DURING CONSTRUCTION

9.01 General Scope of DESIGN PROFESSIONAL’s Duties
9.02 Resident Project Representative
9.03 Clarifications and Interpretations
9.04 Rejecting Defective Work
9.05 Shop Drawings, Change Orders and Payments
9.06 Determinations for Unit Prices
9.07 Decisions on Requirements of Contract Documents and Acceptability of Work
9.08 Limitations on DESIGN PROFESSIONAL’s Authority and Responsibilities

ARTICLE 10 CHANGES IN THE WORK

10.01 Authorized Changes in the Work
10.02 Unauthorized Changes in the Work
10.03 Execution of Change Orders
10.04 Notification to Surety

ARTICLE 11 CHANGE OF CONTRACT PRICE

11.01 Change of Contract Price
11.02 Cost of the Work
11.03 Cash Allowances
11.04 Unit Price Work
11.05 Dispute Resolution

ARTICLE 12 CONTRACT TIMES

12.01 Time of the Essence
12.02 Change of Contract Times
12.03 Proof Required To Justify An Extension of Time For Excusable and Compensable Delays
12.04 Delays Within CONTRACTOR's Control
12.05 Delays Beyond the CITY's and CONTRACTOR's Control
12.06 Delay Damages
12.07 Dispute Resolution

ARTICLE 13 TESTS AND INSPECTIONS; CORRECTION, REMOVAL OR ACCEPTANCE OF DEFECTIVE WORK

13.01 Access to Work
13.02 Tests and Inspections
13.03 Notice of Defects
13.04 Uncovering Work
13.05 CITY May Stop the Work
13.06 Correction or Removal of Defective Work
13.07 Correction Period
13.08 Acceptance of Defective Work
13.09 CITY May Correct Defective Work

ARTICLE 14 PAYMENTS TO CONTRACTOR AND COMPLETION

14.01 Schedule of Values
14.02 Application for Progress Payments
14.03 Contractor's Warranty of Title
14.04 Substantial Completion
14.05 Partial Utilization
14.06 Final Inspection
14.07 Final Payment
14.08 Final Completion Delayed
14.09 Waiver of Claims
14.10 Completion of Work by City

ARTICLE 15 SUSPENSION OF WORK AND TERMINATION

15.01 CITY May Suspend Work
15.02 CITY May Terminate for Default
15.03 CITY May Terminate for Convenience

ARTICLE 16 CLAIMS AND DISPUTES

16.01 Definition
16.02 Written Notice and Burden of Proof
16.03 Time Limits on Claims
16.04 Continuing Contract Performance
16.05 Injury or Damage to Person or Property
16.06 Initial Resolution of Claims and Disputes

16.07 Final Resolution of Claims and Disputes

ARTICLE 17 MISCELLANEOUS

17.01 Giving Notice
17.02 Computation of Times
17.03 Cumulative Remedies
17.04 Survival of Obligations
17.05 Controlling Law

ARTICLE 1 DEFINITIONS AND TERMINOLOGY

1.01 Defined Terms

A. Wherever used in these General Conditions or in the other Contract Documents, the following terms have the meanings indicated which are applicable to both the singular and plural thereof:

1. Addenda - Written or graphic instruments issued prior to the opening of Bids that clarify, correct or change the Bidding Requirements or the Contract Documents.

2. Agreement—The written Contract between CITY and CONTRACTOR governing the Work to be performed; other Contract Documents are attached to the Agreement and made a part thereof as provided therein.

3. Application for Payment—The form accepted by CITY's Representative which is to be used by CONTRACTOR in requesting progress or final payments and which is to be accompanied by such supporting documentation as is required by the Contract Documents.

4. Asbestos - Any material that contains more than one percent (1%) Asbestos and is friable or is releasing Asbestos fibers into the air above current action levels established by the United States Occupational Safety and Health Administration.

5. Bid- The offer or proposal of the Bidder submitted on the Bid Form/Contract setting forth the prices for the Work to be performed. A Bidder's Bid becomes a Contract with CITY if the CITY executes the Bid Form/Contract submitted by Bidder. If the CITY executes the Bid Form/Contract submitted by Bidder, the term "Bidder" shall mean CONTRACTOR.

6. Bidder- One who submits a Bid directly to CITY, as distinct from a sub-bidder who submits a bid to a Bidder. If the CITY executes the Bid Form/Contract submitted by Bidder, the term "Bidder" shall mean CONTRACTOR in both the Bidding Documents and Contract Documents unless the context clearly indicates otherwise.

7. Bidding Documents- The advertisement or Invitation to Bid, Instructions to Bidders, the Bid Form/Contract, and the proposed Contract Documents (including all Addenda issued prior to receipt of Bids).

8. Bidding Requirements- The advertisement or invitation to bid, Instructions to Bidders, Bid security, and the Bid Form/Contract with any supplements.

9. Bonds- Payment Bond and Performance and Maintenance Bond and other instruments of security.

10. Calendar Day- Any day shown on the calendar, including Saturdays, Sundays, and holidays.

11. Change Order- A written document issued by CITY that authorizes an addition, deletion or revision in the Work, or an adjustment in the Contract Price or the Contract Times, issued on or after the Effective Date of the Contract.

12. CITY/OWNER- Kansas City, Missouri, a constitutionally chartered municipal corporation, with which CONTRACTOR has entered into the Contract and for whom the Work is to be provided**.**

13. CITY's Representative- Person or agency designated to act for the Director as provided in these Contract Documents.

14. Consultant- Person, firm or corporation having a contract with CITY or DESIGN PROFESSIONAL to furnish services as an independent professional associate or Consultant with respect to the Project and who's identified as such in the Supplementary Conditions.

The Consultant(s) is identified and their seals affixed on the Certification Page(s). The certifications describe the respective responsibilities for the Drawings and Specifications prepared by the Consultant(s) and are incorporated into this Contract.

15. Contract- The entire and integrated written agreement between CITY and CONTRACTOR concerning the Work that incorporates all Contract Documents. The Bid Form/Contract submitted by Bidder is the Contract between CITY and CONTRACTOR upon execution by CITY. The Contract supersedes prior negotiations, representations, or agreements, whether written or oral.

16. Contract Documents- The Contract Documents establish the rights and obligations of the parties and include the Contract, Addenda (which pertain to the Contract Documents), CONTRACTOR's Bid Form/Contract (including documentation accompanying the Bid and any post Bid documentation submitted prior to the Notice of Intent to Contract), the Construction Project Instructions, the Contractor's Utilization Plan/Request for Waiver, the Notice to Proceed, the Bonds, these General Conditions, the Supplementary Conditions, the Specifications and the Drawings as the same are more specifically identified in the Project Manual and the certification page(s) of the DESIGN PROFESSIONAL and Consultant(s), together with approved project baseline schedule and amendments thereto and all Written Amendments, Change Orders, Work Change Directives, and DESIGN PROFESSIONAL's written interpretations and clarifications issued on or after the Effective Date of the Contract, and approved Shop Drawings. Reports and drawings of subsurface and physical conditions are not Contract Documents. Only printed or hard copies of the items listed in this Paragraph are Contract Documents. Files in electronic media format of text, data, graphics, and the like that may be furnished by CITY to CONTRACTOR are not Contract Documents, except project schedules submitted by CONTRACTOR and approved by CITY.

17. Contract Price- The money payable by CITY to CONTRACTOR for completion of the Work in accordance with the Contract Documents as stated in the Agreement.

18. Contract Times- The number of days or the dates stated in the Supplementary Conditions: (a) to achieve Substantial Completion, and (b) to complete the Work so that it is ready for final payment as evidenced by CITY's Representative's written recommendation of final payment.

19. CONTRACTOR- The person, firm, partnership, company, corporation or association licensed or otherwise authorized by law to do business in Missouri, with whom CITY has entered into the Agreement.

20. Day– Shall constitute a Calendar Day.

21. DESIGN PROFESSIONAL- Architect, Engineer or other licensed professional who is either employed by or has contracted with CITY to serve in a design capacity and whose Consultants, members, partners, employees or agents have prepared and sealed the Drawings and Specifications.

The DESIGN PROFESSIONAL(s) is identified and their seals affixed on the Certification Page(s). The certifications describe the respective responsibilities for the Drawings and Specifications prepared by the DESIGN PROFESSIONAL and are incorporated into this Contract.

22. DESIGN PROFESSIONAL's Project Representative- The authorized representative of DESIGN PROFESSIONAL who may be assigned to the Site or any part thereof.

23. Director- The term Director shall mean the duly appointed executive officer of a department of City who is empowered by the City Charter or by the City Council to enter into a contract on behalf of City, or to grant a permit for improvements to land owned by City. A Director is authorized to delegate this authority to a City employee so designated in writing.

24. Drawings- The drawings which graphically show the scope, extent and character of the Work to be furnished and performed by CONTRACTOR and which have been prepared by DESIGN PROFESSIONAL and are included in the Contract Documents. Shop Drawings are not Drawings as so defined.

25. Effective Date of the Contract- The date indicated in the Contract on which it becomes effective, but if no such date is indicated it means the date on which the Contract is fully executed by CITY.

26. General Requirements- Sections of Division 1 of the Specifications. The General Requirements pertain to all sections of the Specifications.

27. Hazardous Environmental Condition- The presence at the Site of Asbestos, Lead-Based Paint, PCBs, Petroleum, Hazardous Waste, or Radioactive Material in such quantities or circumstances that may present a substantial danger to persons or property exposed thereto in connection with the Work.

28. Hazardous Waste- The term Hazardous Waste shall have the meaning provided in Section 1004 of the Solid Waste Disposal Act (42 USC Section 6903) as amended from time to time.

29. Laws or Regulations- Any and all applicable laws, rules, regulations, ordinances, codes and orders of any and all governmental bodies, agencies, authorities and courts having jurisdiction.

30. Lead-Based Paint- Any paint, varnish, stain, or other applied coating that has one (1) mg or more of lead per square centimeter. The terms “leaded paint” and “lead-containing paint” are synonymous with Lead-Based Paint.

31. Liens- Liens, charges, security interests or encumbrances upon real property or personal property.

32. Milestone- A principal event specified in the Contract Documents relating to an intermediate completion date or time prior to Substantial Completion of all the Work.

33. Notice of Intent to Contract- The written notice by CITY to the apparent successful Bidder stating that upon compliance by that apparent successful Bidder with the conditions in the Bid Documents enumerated, within the time specified, and upon enactment of an appropriate ordinance or resolution, CITY will sign and deliver the Contract.

34. Notice to Proceed- A written notice given by CITY to CONTRACTOR fixing the date on which the Contract Times will commence to run and on which CONTRACTOR shall start to perform CONTRACTOR’s obligations under the Contract Documents.

35. Partial Utilization- Use by CITY of a substantially completed part of the Work for the purpose for which it is intended (or a related purpose) prior to Substantial Completion of all the Work.

36. PCBs- Polychlorinated biphenyls.

37. Petroleum- Petroleum, including crude oil or any fraction thereof which is liquid at standard conditions of temperature and pressure (60 degrees Fahrenheit and 14.7 pounds per square inch absolute), such as oil, petroleum, fuel oil, oil sludge, oil refuse, gasoline, kerosene, and oil mixed with other non-Hazardous Wastes and crude oils.

38. Project- The total construction of which the Work to be provided under the Contract Documents may be the whole, or a part as indicated elsewhere in the Contract Documents.

39. Project Manual- The documentary information prepared for bidding and constructing the Work. A listing of the contents of the Project Manual may be issued in one or more volumes and is contained in the table(s) of contents.

40. Radioactive Material- Source, special nuclear, or byproduct material as defined by the Atomic Energy Act of 1954 (42 USC Section 2011 et seq.) as amended from time to time.

41. Samples- Physical examples of materials, equipment, or workmanship that are representative of some portion of the Work and which establish the standards by which such portion of the Work will be judged.

42. Shop Drawings- All drawings, diagrams, illustrations, schedules and other data or information which are specifically prepared or assembled by or for CONTRACTOR and submitted by CONTRACTOR to illustrate some portion of the Work.

43. Site- Lands or areas indicated in the Contract Documents as being furnished by CITY upon which the Work is to be performed, including rights-of-way and easements for access thereto, and such other lands furnished by CITY which are designated for the use of CONTRACTOR.

44. Specifications- Those portions of the Contract Documents consisting of written technical descriptions of materials, equipment, construction systems, standards and workmanship as applied to the Work and certain administrative details applicable thereto.

45. Subcontractor- Any individual, firm, partnership, company, corporation or association licensed or otherwise authorized by law to do business in Missouri, to whom CONTRACTOR, with written notification to CITY, has entered into an agreement to perform a part of the Work.

46. Substantial Completion- When Work (or a specified part thereof) has progressed to the point where, in the opinion of DESIGN PROFESSIONAL as evidenced by DESIGN PROFESSIONAL's definitive certificate of Substantial Completion, it is sufficiently complete, in accordance with the Contract Documents, so that the Work (or specified part) can be utilized for the purposes for which it is intended. The terms "substantially complete" and "substantially completed" as applied to all or part of the Work refer to Substantial Completion thereof.

47. Supplementary Conditions- The part of the Contract Documents which amends and/or supplements these General Conditions.

48. Supplier- A manufacturer, fabricator, supplier, distributor, materialman or vendor having a direct contract with CONTRACTOR or with any Subcontractor to furnish materials or equipment to be incorporated into the Work by CONTRACTOR or any Subcontractor.

49. Underground Facilities- All pipelines, conduits, ducts, cables, wires, manholes, vaults, tanks, tunnels or other such facilities or attachments, and any encasements containing such facilities which have been installed underground to furnish any of the following services or materials: electricity, gases, steam, liquid petroleum products, telephone or other communications, cable television, water, wastewater, storm water, other liquids or chemicals, or traffic or other control systems.

50. Unit Price Work- Work to be paid for on the basis of unit prices.

51. Work- The entire completed construction or the various separately identifiable parts thereof required to be furnished under the Contract Documents. Work includes and is the result of performing or furnishing labor, and furnishing and incorporating material and equipment into the construction, and furnishing documents, all as required by the Contract Documents.

52. Work Change Directive- A written directive to CONTRACTOR, issued on or after the Effective Date of the Contract, signed by CITY and recommended by DESIGN PROFESSIONAL, ordering an addition, deletion or revision in the Work, or responding to differing or unforeseen subsurface or physical conditions under which the Work is to be performed, or to emergencies. A Work Change Directive will not change the Contract Price or the Contract Times, but is evidence that the parties expect that the change directed or

documented by a Work Change Directive will be incorporated in a subsequently issued Change Order following negotiations by the parties as to its effect, if any, on the Contract Price or Contract Times.

53. Work Day - Any day during which the CONTRACTOR is able to work a period of six (6) hours or more. Days that are not Work Days are days during which the CONTRACTOR is unable to work for a period of six (6) hours by reason of strikes, boycotts, labor disputes, embargoes, unusual delays in transportation or shortage of material, acts of God, acts of the public enemy, acts of superior governmental authority, weather conditions, riots, rebellion, sabotage, or any other circumstances for which CONTRACTOR is not responsible or which is not within its control. Saturdays, Sundays, and holidays on which the CONTRACTOR's forces engage in Work requiring the presence of an inspector, will be considered as Work Days.

54. Written Amendment- A written statement modifying the Contract Documents, signed by CITY and CONTRACTOR on or after the Effective Date of the Contract and normally dealing with the non-engineering or non-technical rather than strictly construction-related aspects of the Contract Documents.

1.02 Terminology

A. Intent of Certain Terms or Adjectives

1. Whenever in the Contract Documents the terms "as ordered," "as directed," "as required," "as allowed," "as approved," or terms of like effect or import are used, or the adjectives "reasonable," "suitable," "acceptable," "proper" or "satisfactory" or adjectives of like effect or import are used to describe a requirement, direction, review or judgment of DESIGN PROFESSIONAL as to the Work, it is intended that such requirement, direction, review or judgment will be solely to evaluate, in general, the completed Work for compliance with the requirements of and information in the Contract Documents and conformance with the design concept of the completed Project as a functioning whole as shown or indicated in the Contract Documents (unless there is a specific statement indicating otherwise). The use of any such term or adjective shall not be effective to assign to DESIGN PROFESSIONAL any duty or authority to supervise or direct the furnishing or performance of the Work or any duty or authority to undertake responsibility contrary to the provisions of Paragraph 9.08 or any other provision of the Contract Documents.

B. Defective

1. The word "defective," when modifying the word "Work," refers to Work that is unsatisfactory, faulty or deficient, in that it does not conform to the Contract Documents, or does not meet the requirements of any inspection, reference standard, test or approval referred to in the Contract Documents, or has been damaged prior to CITY 's Representative's recommendation of final payment (unless responsibility for the protection thereof has been assumed by CITY at Substantial Completion in accordance with Paragraph 14.04 or 14.05).

C. Furnish, Install, Perform, Provide

1. The word "furnish," when used in connection with services, materials, or equipment, shall mean to supply and deliver said services, materials, or equipment to the Site (or some other specified location) ready for use or installation and in usable or operable condition.

2. The word "install," when used in connection with services, materials, or equipment, shall mean to put into use or place in final position said services, materials, or equipment complete and ready for intended use.

3. The words "perform" or "provide," when used in connection with services, materials, or equipment, shall mean to furnish and install said services, materials, or equipment complete and ready for intended use.

4. When “furnish,” “install,” “perform,” or “provide” is not used in connection with services, materials, or equipment in a context clearly requiring an obligation of CONTRACTOR, “provide” is implied.

D. Unless stated otherwise in the Contract Documents, words and phrases which have a well-known technical or construction industry or trade meanings are used in the Contract Documents in accordance with such recognized meaning.

ARTICLE 2 PRELIMINARY MATTERS

2.01 Delivery of Bonds

A. CONTRACTOR shall deliver to CITY such Bonds as CONTRACTOR may be required to furnish.

2.02 Evidence of Insurance

A. CONTRACTOR shall deliver to CITY certificates of insurance or other evidence of insurance that CITY may request, which CONTRACTOR is required to purchase and maintain in accordance with Article 5 or any other applicable provision in the Contract Documents.

2.03 Copies of Documents

A. CITY shall furnish to CONTRACTOR one (1) copy of the Drawings and Specifications, including addenda.

2.04 Commencement of Contract Times; Notice to Proceed

A. The Contract Times will commence to run on the date indicated in the Notice to Proceed.

2.05 Starting the Work

A. CONTRACTOR shall start to perform the Work on the date when the Contract Times commence to run, but no Work shall be done at the Site prior to the date on which the Contract Times commence to run, unless otherwise indicated in the Notice to Proceed.

2.06 Before Starting Construction

A. CONTRACTOR's Review of Contract Documents: Before undertaking each part of the Work, CONTRACTOR shall carefully study and compare the Contract Documents and check and verify pertinent figures shown thereon and all applicable field measurements. CONTRACTOR shall promptly report in writing to DESIGN PROFESSIONAL any conflict, error, ambiguity or discrepancy which CONTRACTOR may discover and shall obtain a written interpretation or clarification from DESIGN PROFESSIONAL before proceeding with any Work affected thereby. CONTRACTOR shall not be liable to CITY or DESIGN PROFESSIONAL for failure to report any conflict, error, ambiguity or discrepancy in the Contract Documents, unless CONTRACTOR knew or reasonably should have known thereof.

B. Preliminary Schedules: Within ten (10) days after the Effective Date of the Contract, or on such later date as CITY's Representative shall provide in writing, CONTRACTOR shall submit to CITY's Representative for review:

1. Preliminary Project Schedule: CONTRACTOR shall submit a proposed project schedule for CITY’s acceptance. The proposed project schedule shall include a detailed and comprehensive construction schedule utilizing a critical path method diagram network that (a) shows all major procurement and construction elements and phases of the Project; (b) breaks down each element or phase by trade; (c) shows early and late starts so that all float time will be accurately identified; (d) all other activities necessary for the timely completion of the Project in accordance with the scheduled dates for Substantial and Final Completion; and (e) highlights the project’s critical path. CITY’s acceptance is expressly limited to CITY’s acknowledgement that, based upon CITY’s limited review, the dates of Substantial

Completion and Milestone dates are acceptable. After final acceptance of the preliminary project schedule by the CITY, it shall be considered the project baseline schedule pursuant to Paragraph 2.07(B).

2. Preliminary schedule of Shop Drawings and Sample submittals which will list each required submittal and the times for submitting, reviewing and processing such submittal; and

3. Preliminary 01290.02 Schedule of Values for all of the Work which will include quantities and prices of items which when added together equals the Contract Price and will subdivide the Work into component parts in sufficient detail to serve as the basis for progress payments during performance of the Work. Such prices will include an appropriate amount of overhead and profit applicable to each item of Work.

C. Preconstruction Conference: Before any Work at the Site may be started, a conference attended by CONTRACTOR, DESIGN PROFESSIONAL and others, as appropriate, will be scheduled by CITY's Representative to establish a working understanding among the parties as to the Work and to discuss the schedules referred to in Paragraph 2.06 B, procedures for handling Shop Drawings and other submittals, processing Applications for Payment, maintaining required records, Claims process, dispute resolution or any other applicable provisions of the Contract Documents.

2.07 Acceptable Schedules

A. Acceptable schedule: The Contractor shall update and submit to the CITY for review the preliminary schedule within seven (7) Calendar Days after the Notice to Proceed.

1. The CITY shall review and make any necessary comments and/or adjustments to the updated preliminary schedule. The Contractor shall incorporate the CITY's comments and resubmit the updated preliminary schedule within seven (7) Calendar Days from receipt of the CITY's comments.

B. Project Baseline Schedule: The accepted updated preliminary schedule shall be considered the project baseline schedule and shall be used by the CONTRACTOR for planning, scheduling, managing, and executing the Work. The project baseline schedule shall not be changed without the written consent of CITY. The project baseline schedule may be further modified by the Supplemental Conditions.

C. CONTRACTOR's schedule of values will be acceptable to CITY's Representative as to form and substance if it provides a reasonable allocation of the Contract Price to component parts of the Work.

ARTICLE 3 CONTRACT DOCUMENTS : INTENT, AMENDING, REUSE

3.01 Intent

A. The Contract Documents comprise the entire Contract between CITY and CONTRACTOR concerning the Work.

B. It is the intent of the Contract Documents to describe a functionally complete Project (or part thereof) to be constructed in accordance with the Contract Documents. Any Work, materials or equipment that may reasonably be inferred from the Contract Documents or from prevailing custom or trade usage as being required to produce the intended result will be furnished and performed whether or not specifically called for at no additional cost to CITY. Clarifications and interpretations of the Contract Documents shall be issued by DESIGN PROFESSIONAL as provided in Paragraph 9.03.

C. Correlation and intent of documents: The Drawings and Specifications are intended to supplement each other. Any Work shown on the Drawings and not mentioned in the Specifications (or vice versa) shall be as binding and shall be completed the same as if mentioned or shown on both. In the event of conflicts or discrepancies among the Contract Documents, interpretations will be based on the following priorities:

1. Change Orders and Written Amendments
2. Project Baseline Schedule Requirements
3. Approved Shop Drawings
4 Addenda, with those of later date having precedence over those of earlier date
5. The Supplementary Conditions
6. The General Conditions
7. Drawings and Specifications

D. In the case of an inconsistency between Drawings and Specifications, the requirements of the Specifications shall govern. If Drawings are in conflict, larger scale details shall govern over smaller or no-scale Drawings. If Specification sections are in conflict with each other, the conflict shall be resolved by DESIGN PROFESSIONAL in accordance with reasonable interpretation of such documents.

E. The general character of the detailed Work is shown on the Drawings, but minor modifications may be made in the full size or scale details. Where the word “similar” occurs on the Drawings, it shall be used in its general sense and not as meaning identical, and all details shall be worked out in relation to their location and their connection to the other parts of the Work. Where on any Drawings a portion of the Work is drawn out and the remainder is indicated in outline, the parts drawn out shall apply also to all other like portions of the Work. Where ornaments or other details are indicated by starting only, such details shall be continued throughout the courses or parts in which they occur and shall also apply to all other similar parts in the Work, unless otherwise indicated.

3.02 Reference to Standards and Specifications of Technical Societies

A. Reference to standards, specifications, manuals or codes of any technical society, organization or association, or to Laws or Regulations, whether such reference be specific or by implication, shall mean the latest standard, specification, manual, code or Laws or Regulations in effect at the time of opening of Bids (or on the date of CONTRACTOR’s proposal if there are no Bids), except as may be otherwise specifically stated in the Contract Documents.

1. No provision of any such standard, specification, manual, code or instruction of Supplier shall be effective to change the duties or responsibilities of CITY, CONTRACTOR or DESIGN PROFESSIONAL, or any of their Subcontractors, Consultants, agents, or employees from those set forth in the Contract Documents, nor shall it be effective to assign to CITY or DESIGN PROFESSIONAL or any of their Consultants, agents or employees any duty or authority to supervise or direct the furnishing or performance of the Work or any duty or authority to undertake responsibility inconsistent with the provisions of the Contract Documents.

3.03 Reporting and Resolving Discrepancies

A. Reporting Discrepancies: If, during the performance of the Work, CONTRACTOR discovers any conflict, error, ambiguity or discrepancy within the Contract Documents or between the Contract Documents and any provision of any Laws or Regulations applicable to the performance of the Work or of any standard, specification, manual, code or any instruction of any Supplier referred to in Paragraph 6.07, CONTRACTOR shall report it immediately to DESIGN PROFESSIONAL in writing. CONTRACTOR shall not proceed with the Work affected thereby (except in an emergency as authorized by Paragraph 6.17) until an amendment or supplement to the Contract Documents has been issued by one of the methods indicated in Paragraph 3.04; provided, however, that CONTRACTOR shall not be liable to CITY or DESIGN PROFESSIONAL for failure to report any such conflict, error, ambiguity or discrepancy unless CONTRACTOR knew or reasonably should have known thereof.

B. Resolving Discrepancies. The provisions of the Contract Documents shall take precedence in resolving any conflict, error, ambiguity or discrepancy between the provisions of the Contract Documents and:

1. the provisions of any standard, specification, manual, code or instruction (whether or not specifically incorporated by reference in the Contract Documents); or

2. the provisions of any Laws or Regulations applicable to the performance of the Work.

3.04 Amending and Supplementing Contract Documents

A. The Contract Documents may be amended to provide for additions, deletions and revisions in the Work or to modify the terms and conditions thereof in one or more of the following ways:

1. a Written Amendment or

2. a Change Order (pursuant to Article 10), whether pursuant to a Work Change Directive or otherwise.

B. The requirements of the Contract Documents may be supplemented and minor variations and deviations in the Work may be authorized, in one or more of the following ways

1. DESIGN PROFESSIONAL's approval of a Shop Drawing or Sample (pursuant to Paragraph 6.18), or

2. DESIGN PROFESSIONAL's written interpretation or clarification (pursuant to Paragraph 9.03).

3.05 Reuse of Documents

A. CONTRACTOR and any Subcontractor or Supplier or other person or organization performing or furnishing any of the Work under this Contract:

1. shall not have or acquire any title to or ownership rights in any of the Drawings, Specifications or other documents (or copies of any thereof) prepared by or bearing the seal of DESIGN PROFESSIONAL or Consultant, and

2. shall not reuse any of such Drawings, Specifications, other documents or copies thereof on extensions of the Project or any other project without written consent of CITY, and of DESIGN PROFESSIONAL or Consultant, as applicable, and specific written verification or adaptation by DESIGN PROFESSIONAL or Consultant.

This prohibition will survive final payment, completion, and acceptance of the Work, or termination or completion of the Contract. Nothing herein shall preclude CONTRACTOR from retaining copies of the Contract Documents for record purposes.

ARTICLE 4 AVAILABILITY OF LANDS; SUBSURFACE AND PHYSICAL CONDITIONS; REFERENCE POINTS

4.01 Availability of Lands

A. CITY shall furnish the Site. CITY shall identify any encumbrances or restrictions not of general application but specifically related to use of lands so furnished with which CONTRACTOR will have to comply in performing the Work. Easements for permanent structures or permanent changes in existing facilities will be obtained and paid for by CITY, unless otherwise provided in the Contract Documents. If CONTRACTOR and CITY are unable to agree on entitlement to or the amount or extent of any adjustments in the Contract Price or the Contract Times or both as a result of any delay in CITY's furnishing these lands, rights-of-way or easements, CONTRACTOR may make a Claim as provided in Article 16. CONTRACTOR shall provide for all additional lands and access thereto that may be required for temporary construction facilities or storage of materials and equipment.

4.02 Subsurface and Physical Conditions

A. Reports and Drawings: Reference is made to the Supplementary Conditions for identification of:

1. Subsurface Conditions: Those reports of explorations and tests of subsurface conditions at or contiguous to the Site that have been utilized by DESIGN PROFESSIONAL in preparing the Contract Documents; and

2. Physical Conditions: Those drawings of physical conditions in or relating to existing surface or subsurface structures at or contiguous to the Site (except Underground Facilities) that have been utilized by DESIGN PROFESSIONAL in preparing the Contract Documents.

B. Limited Reliance by CONTRACTOR on Technical Data Authorized: CONTRACTOR may rely upon the general accuracy of the technical data contained in reports and drawings of subsurface or physical conditions, but such reports and drawings are not Contract Documents. The technical data is identified in the Supplementary Conditions. Except for reliance on such technical data, CONTRACTOR may not rely upon or make any Claim against CITY, DESIGN PROFESSIONAL or any Consultant with respect to:

1. the completeness of such reports and drawings for CONTRACTOR's purposes, including, but not limited to, any aspects of the means, methods, techniques, sequences and procedures of construction to be employed by CONTRACTOR and safety precautions and programs incident thereto; or

2. other data, interpretations, opinions and information contained in such reports or shown or indicated in such drawings, or

3. any CONTRACTOR interpretation of or conclusion drawn from any technical data or any such other data, interpretations, opinions or information.

4.03 Differing Subsurface or Physical Conditions

A. Notice of Differing Subsurface or Physical Conditions. If CONTRACTOR believes that any subsurface or physical condition at or contiguous to the Site that is uncovered or revealed either:

1. is of such a nature as to establish that any technical data on which CONTRACTOR is entitled to rely as provided in Paragraphs 4.02 A and 4.02 B is materially inaccurate; or

2. is of such a nature as to require a change in the Contract Documents; or

3. differs materially from that shown or indicated in the Contract Documents; or

4. is of an unusual nature, and differs materially from conditions ordinarily encountered and generally recognized as inherent in work of the character provided for in the Contract Documents; then CONTRACTOR shall, promptly after becoming aware thereof and before further disturbing the subsurface or physical conditions or performing any Work in connection therewith (except in an emergency as required by Paragraph 6.17), notify CITY and DESIGN PROFESSIONAL in writing about such condition(s). CONTRACTOR shall not further disturb such conditions or perform any Work in connection therewith (except as aforesaid) until receipt of written order to do so.

B. DESIGN PROFESSIONAL's Review: After receipt of notice as required by Paragraph 4.03 A, DESIGN PROFESSIONAL will promptly review the pertinent conditions, determine the necessity for CITY to obtain additional exploration or tests with respect thereto and notify CITY in writing (with a copy to CONTRACTOR) of DESIGN PROFESSIONAL's findings and conclusions.

C. Possible Contract Documents Change: If CITY concludes that a change in the Contract Documents is required as a result of a condition that meets one or more of the categories in Paragraph 4.03 A, a Work Change Directive or a Change Order will be issued as provided in Article 10 to reflect and document the consequences of such change.

D. Possible Price or Times Adjustments: An equitable adjustment in the Contract Price or in the Contract Times, or both, will be allowed to the extent that the existence of a subsurface or physical condition causes an increase or decrease in CONTRACTOR's cost of, or time required for, performance of the Work; subject, however, to the following:

1. the condition must meet any one or more of the categories described in Paragraphs 4.03 A.1 through 4.03 A.4, inclusive;

2. a change in the Contract Documents pursuant to Paragraph 4.03 C will not be an automatic authorization of, nor a condition precedent to, entitlement to any such adjustments;

3. with respect to Work that is paid for on a unit price basis, any adjustment in Contract Price will be subject to the provisions of Paragraphs 9.06 and 11.04; and

4. CONTRACTOR shall not be entitled to any adjustment in the Contract Price or Contract Times if;

a. CONTRACTOR knew, or by the exercise of ordinary care could have known, of such conditions at the time CONTRACTOR made a final commitment to CITY with respect to Contract Price and Contract Times by the submission of a Bid; or

b. the existence of such condition could reasonably have been discovered or revealed as a result of any examination, investigation, exploration, test or study of the Site and contiguous areas required by the Bidding Requirements or Contract Documents to be conducted by or for CONTRACTOR prior to CONTRACTOR's making such final commitment; or

c. CONTRACTOR failed to give the written notice as required by Paragraph 4.03 A.

E. If CITY and CONTRACTOR are unable to agree on entitlement to, or magnitude of, an equitable adjustment in the Contract Price pursuant to Article 11 and/or Contract Times pursuant to Article 12, a Claim may be made therefore as provided in Article 16. However, CITY, DESIGN PROFESSIONAL and Consultants shall not be liable to CONTRACTOR for any costs, losses or damages (including but not limited to all fees and charges of engineers, architects, attorneys, and other professionals and all other dispute resolution costs) sustained by CONTRACTOR on or in connection with any other project or anticipated project.

4.04. Physical Conditions – Underground Facilities

A. Shown or Indicated: The information and data shown or indicated in the Contract Documents with respect to existing Underground Facilities at or contiguous to the Site is based on information and data furnished to CITY or DESIGN PROFESSIONAL by the owners of such Underground Facilities or by others.

1**.** CITY and DESIGN PROFESSIONAL shall not be responsible for the accuracy or completeness of any such information or data; and

2. The cost of all of the following will be included in the Contract Price and CONTRACTOR shall have full responsibility for:

a. reviewing and checking all such information and data,

b. locating all Underground Facilities shown or indicated in the Contract Documents,

c. coordination of the Work with the owners of such Underground Facilities during construction, and

d. the safety and protection of all such Underground Facilities as provided in Paragraph 6.14 and repairing any damage thereto resulting from the Work.

B. Not Shown or Indicated: If an Underground Facility is uncovered or revealed at or contiguous to the Site, and was not shown or indicated in the Contract Documents, or was

shown or indicated incorrectly in the Contract Documents, CONTRACTOR shall, promptly after becoming aware thereof and before further disturbing conditions affected thereby or performing any Work in connection therewith (except in an emergency as required by Paragraph 6.17), identify the owner of such Underground Facility and give written notice to that owner and to CITY and DESIGN PROFESSIONAL.

C. DESIGN PROFESSIONAL's Review: After receipt of notice as required by Paragraph 4.04 B, DESIGN PROFESSIONAL will promptly review the consequences of the existence of the Underground Facility and notify CITY in writing (with a copy to CONTRACTOR) of DESIGN PROFESSIONAL's findings and conclusions.

D. Possible Contract Documents Change: If CITY concludes that a change in the Contract Documents is required as a result of the existence of an Underground Facility that either was not shown, or was shown incorrectly, in the Contract Documents, a Work Change Directive or Change Order will be issued as provided in Article 10 to reflect and document the consequences of such change.

E. Possible Price or Times Adjustments: An equitable adjustment in the Contract Price or in the Contract Times, or both, will be allowed to the extent that the existence of the Underground Facility causes an increase or decrease in CONTRACTOR's cost of, or time required for, performance of the Work; subject, however, to the following:

1. a change in the Contract documents pursuant to Paragraph 4.04 D will not be an automatic authorization of, nor a condition precedent to, entitlement to any such adjustments;

2. with respect to Work that is paid for on a unit price basis, any adjustment in Contract Price will be subject to the provisions of Paragraphs 9.06 and 11.04; and

3. CONTRACTOR shall not be entitled to any adjustment in the Contract Price or Contract Times if;

a. CONTRACTOR knew, or by the exercise of ordinary care could have known, of the existence of the Underground Facility at the time CONTRACTOR made a final commitment to CITY with respect to Contract Price and Contract Times by the submission of a Bid; or

b. the existence of the Underground Facility could reasonably have been discovered or revealed as a result of any examination, investigation, exploration, test or study of the Site and contiguous areas required by the Bidding Requirements or Contract Documents to be conducted by or for CONTRACTOR prior to CONTRACTOR's making such final commitment; or

c. CONTRACTOR failed to give the written notice as required by Paragraph 4.04 B.

F. If CITY and CONTRACTOR are unable to agree on entitlement to, or magnitude of, an equitable adjustment in the Contract Price pursuant to Article 11 and/or Contract Times pursuant Article 12, a Claim may be made therefore as provided in Article 16. However, CITY, DESIGN PROFESSIONAL and Consultants shall not be liable to CONTRACTOR for any costs, losses or damages (including but not limited to all fees and charges of engineers, architects, attorneys, and other professionals and all other dispute resolution costs) sustained by CONTRACTOR on or in connection with any other project or anticipated project.

4.05 Reference Points

A. CITY shall provide engineering surveys to establish reference points for construction that in DESIGN PROFESSIONAL's judgment are necessary to enable CONTRACTOR to proceed with the Work. CONTRACTOR shall be responsible for laying out the Work, shall protect and preserve the established reference points and property monuments, and shall make no changes or relocations without the prior written approval of CITY. CONTRACTOR shall report to DESIGN PROFESSIONAL whenever any reference point or property monument is lost or destroyed or requires relocation because of necessary changes in grades or locations, and shall be

responsible for the accurate replacement or relocation of such reference points or property monuments by professionally qualified personnel.

4.06 Asbestos, Lead-Based Paint, PCBs, Petroleum, Hazardous Waste or Radioactive Material

A. Reports and Drawings: Reference is made to the Supplementary Conditions for the identification of those reports and drawings relating to a Hazardous Environmental Condition identified at the Site, if any, that have been utilized by the DESIGN PROFESSIONAL in the preparation of the Contract Documents.

B. Limited Reliance by CONTRACTOR on Technical Data Authorized: CONTRACTOR may rely upon the general accuracy of the technical data contained in reports and drawings relating to a Hazardous Environmental Condition at the Site, but such reports and drawings are not Contract Documents. Such technical data is identified in the Supplementary Conditions. Except for such reliance on such technical data, CONTRACTOR may not rely upon or make any Claim against CITY, DESIGN PROFESSIONAL or any Consultant with respect to:

1. the completeness of such reports and drawings for CONTRACTOR's purposes, including, but not limited to, any aspects of the means, methods, techniques, sequences and procedures of construction to be employed by CONTRACTOR and safety precautions and programs incident thereto; or

2. other data, interpretations, opinions and information contained in such reports or shown or indicated in such drawings; or

3. any CONTRACTOR interpretation of or conclusion drawn from any technical data or any such other data, interpretations, opinions or information.

C. CONTRACTOR shall not be responsible for any Hazardous Environmental Condition uncovered or revealed at the Site which was not shown or indicated in Drawings or Specifications or identified in the Contract Documents to be within the scope of the Work. CONTRACTOR shall be responsible for all Hazardous Environmental Conditions created with any materials brought to the Site by CONTRACTOR, Subcontractors, Suppliers, or anyone else for whom CONTRACTOR is responsible. CONTRACTOR shall not be entitled to an extension of the Contract Times or an increase in the Contract Price if CONTRACTOR, Subcontractor, Supplier or anyone for whom CONTRACTOR is responsible created any Hazardous Environmental Condition at the Site or in connection with the Work.

D. If CONTRACTOR encounters a Hazardous Environmental Condition at the Site or if CONTRACTOR or anyone for whom CONTRACTOR is responsible creates a Hazardous Environmental Condition at the Site, CONTRACTOR shall immediately:

1. secure or otherwise isolate such condition;

2. stop all Work in connection with such condition and in any area affected thereby (except in an emergency as required by Paragraph 6. 15); and

3. notify CITY and DESIGN PROFESSIONAL (and promptly thereafter confirm such notice in writing). CITY shall promptly consult with DESIGN PROFESSIONAL concerning the necessity for CITY to retain a qualified expert to evaluate such condition or take corrective action, if any.

E. CONTRACTOR shall neither resume Work nor be required to resume Work in connection with such condition or in any affected area until after CITY has obtained any required permits related thereto and delivered to CONTRACTOR written notice:

1. specifying that such condition and any affected area is or has been rendered safe for the resumption of Work; or

2. specifying any special conditions under which such Work may be resumed safely. If CITY and CONTRACTOR cannot agree as to entitlement to or on the amount or extent, if any, of any adjustment in Contract Price pursuant to Article 11and/or Contract Times to

pursuant to Article 12 as a result of such Work stoppage or such special conditions under which Work is agreed to be resumed by CONTRACTOR, a Claim may be made therefore as provided in Article 16.

F. If after receipt of written notice as required in Paragraph 4.06 E, CONTRACTOR does not agree to resume Work based on a reasonable belief it is unsafe, or does not agree to resume such Work under special conditions specified in the notice, then CITY may order the portion of the Work that is in the area affected by such condition to be deleted from the Work. If CITY and CONTRACTOR cannot agree as to entitlement to or magnitude of an equitable adjustment in Contract Price pursuant to Article 11and/or Contract Times pursuant to Article 12 as a result of deleting such portion of the Work, then a Claim may be made therefore as provided in Article 16. CITY may have such deleted portion of the Work performed by CITY's own forces or others in accordance with Article 7.

G. The provisions of Paragraphs 4.02, 4.03, and 4.04 are not intended to apply to a Hazardous Environmental Condition uncovered or revealed at the Site.

H. All materials used, whether new or salvaged, shall be asbestos-free materials. CONTRACTOR shall immediately call to the attention of the CITY's Representative any specified material or product which the CONTRACTOR knows or suspects to contain asbestos, whether new or salvaged.

ARTICLE 5 BONDS AND INSURANCE

5.01 Performance, Payment and Other Bonds

A. CONTRACTOR shall furnish Performance and Maintenance and Payment Bonds, each in an amount at least equal to the Contract Price, as set out in the Contract Documents, as security for the faithful performance and payment of all CONTRACTOR's obligations under the Contract Documents. These Bonds shall remain in effect at least until one (1) year after the date when final payment of the Contract becomes due, except as provided otherwise by Laws or Regulations or by the Contract Documents. CONTRACTOR shall also furnish such other Bonds as are required by the Supplementary Conditions.

B. All Bonds shall be in the form prescribed by the Contract Documents except as provided otherwise by Laws or Regulations. A certified copy of the agent's authority to act must accompany all Bonds signed by an agent.

C. If the surety on any Bond furnished by CONTRACTOR is declared bankrupt or becomes insolvent, or its right to do business is terminated in any state where any part of the Project is located or it ceases to meet the requirement of Paragraph 5.01 B, CONTRACTOR shall within twenty (20) days thereafter substitute another Bond and surety, both of which must be acceptable to CITY.

5.02 Licensed Sureties and Insurers

A. All Bonds and insurance required by the Contract Documents to be purchased and maintained by CITY or CONTRACTOR shall be obtained from surety or insurance companies that are duly licensed in the State of Missouri and in the jurisdiction in which the Project is located, if not in Missouri, to issue Bonds or insurance policies for the limits and coverages so required. All surety and insurance companies shall hold an A.M. Best rating of A-, V, or better.

5.03 Certificates of Insurance

A. CONTRACTOR shall deliver to CITY and DESIGN PROFESSIONAL, prior to the start of any Work at the Project Site, properly completed certificates of insurance or other evidence that the required insurance is in full force and effect, in a form acceptable to CITY. The receipt or acceptance of a certificate of insurance that does not incorporate the required terms and coverage shall not constitute a waiver by the City of the insurance requirements contained in the Contract Documents.

B. All policies of insurance (and the certificates or other evidence thereof) required to be purchased and maintained by CONTRACTOR in accordance with Paragraphs 5.04 and 5.06 will contain waiver provisions in accordance with Paragraph 5.07 A. The certificates of insurance will contain a provision stating that should any of the policies described in the certificate be cancelled before the expiration date thereof, notice will be delivered in accordance with the policy provisions.

C. If the coverage afforded is cancelled or changed or its renewal is refused, CONTRACTOR shall give at least thirty (30) days prior written notice to CITY and to each other additional insured to whom a certificate of insurance has been issued.

5.04 CONTRACTOR's Liability Insurance

A. CONTRACTOR shall purchase and maintain such liability and other insurance as is appropriate for the Work being performed and furnished, and will provide protection from claims set forth below which may arise out of or result from CONTRACTOR's performance and furnishing of the Work and CONTRACTOR's other obligations under the Contract Documents, whether it is to be performed or furnished by CONTRACTOR, any Subcontractor or Supplier, or by anyone directly or indirectly employed by any of them to perform or furnish any of the Work, or by anyone for whose acts any of them may be liable:

1. claims under workers' compensation, disability benefits and other similar employee benefit acts;

2. claims for damages because of bodily injury, occupational sickness or disease, or death of CONTRACTOR's employees;

3. claims for damages because of bodily injury, sickness or disease, or death of any person other than CONTRACTOR's employees;

4. claims for damages insured by customary personal injury liability coverage;

5. claims for damages, other than to the Work itself, because of injury to or destruction of tangible property wherever located, including loss of use resulting therefore; and

6. claims for damages because of bodily injury or death of any person or property damage arising out of the ownership, maintenance or use of any motor vehicle.

B. The policies of insurance so required by Paragraph 5.04 A, to be purchased and maintained shall:

1. with respect to insurance required by Paragraphs 5.04 A.3 through 5.04 A.5 inclusive, include as additional insureds (subject to any customary exclusion for professional liability) CITY, DESIGN PROFESSIONAL, Consultants and any other individuals or entities identified in the Supplementary Conditions to be listed as additional insureds, and include coverage for the respective officers, directors, partners, employees, agents, and other consultants and subcontractors of each and any of all such additional insureds, and the insurance afforded to these additional insureds shall provide primary coverage for all claims covered thereby;

2. include at least the specific coverages and be written for not less than the limits of liability provided in Paragraph 5.04 C or required by Laws or Regulations, whichever is greater;

3. include completed operations insurance;

4. include contractual liability insurance covering CONTRACTOR's indemnity obligations;

5. remain in effect at least until final payment and at all times thereafter when CONTRACTOR may be correcting, removing or replacing defective Work in accordance with Paragraphs 13.06 and 13.07;

6. with respect to completed operations insurance, and any insurance coverage written on a claims-made basis, remain in effect for at least two (2) years after final payment (and CONTRACTOR shall furnish CITY and each other additional insured identified in the Supplementary Conditions to whom a certificate of insurance has been issued evidence satisfactory to CITY and any such additional insured of continuation of such insurance);

7. contain a cross-liability or severability of interest clause or endorsement. Insurance covering the specified additional insureds shall be primary insurance, and all other insurance carried by the additional insureds shall be excess insurance;

8. with respect to commercial automobile liability, commercial general liability, and umbrella liability insurance, CONTRACTOR shall require its insurance carrier(s) to waive all rights of subrogation against CITY, and CITY's officers, directors, partners, employees and agents; and

9. contain a provision or endorsement that the costs of providing the insureds a defense and appeal, including attorneys' fees, as insureds, shall be supplementary and shall not be included as part of the policy limits but shall remain the insurer's responsibility.

C. Specific policies of insurance required by this Paragraph 5.04 shall include:

1. Workers' Compensation and Employers' Liability Insurance. This insurance shall protect CONTRACTOR against all claims under applicable state workers''' compensation laws, including coverage as necessary for the benefits provided under the United States Longshoremen's and Harbor Workers' Act and the Jones Act. CONTRACTOR shall also be protected against claims for injury, disease, or death of employees which, for any reason, may not fall within the provisions of workers' compensation laws. This policy shall include an "all states" or "other states" endorsement. The liability limits shall be not less than:

Workers' Compensation: Statutory

Employers' liability: $1,000,000 each occurrence

2. Commercial Automobile Liability Insurance. This insurance shall be occurrence type written in comprehensive form and shall protect CONTRACTOR, and CITY, DESIGN PROFESSIONAL and Consultants against all claims for injuries to members of the public and damage to property of others arising from the use of motor vehicles, either on or off the Project Site, whether they are owned, non-owned, or hired.

The liability limits shall be not less than: $2,000,000

3. Commercial General Liability Insurance. This insurance shall be occurrence type written in comprehensive form acceptable to CITY. This insurance shall protect CONTRACTOR, and CITY, DESIGN PROFESSIONAL and Consultants as additional insureds, against claims arising from injuries, sickness, disease, or death of any person or damage to property arising out of performance of the Work. The policy shall also include coverage for personal injury liability; contractual liability; completed operations and products liability; and for blasting, explosion, and collapse of buildings; and damage to underground property. The liability limits for bodily injury and property damage shall be not less than:

$2,000,000 combined single limit for each occurrence

$2,000,000 general aggregate.

4. The insurer's costs of providing the insureds a defense and appeal as additional insureds, including attorney's fees, shall be supplementary and shall not be included as part of the policy limits but shall remain the insurer's separate responsibility.

5.05 CITY's Liability Insurance

A. In addition to the insurance required to be provided by CONTRACTOR under Paragraph 5.04, CITY, at CITY's option, may purchase and maintain at CITY's expense liability insurance

that will protect CITY against claims which may arise from operations under the Contract Documents.

5.06 Property Insurance

A. Unless otherwise provided in the Supplementary Conditions, CONTRACTOR shall purchase and maintain property insurance on the Work at the Site in the amount of the full replacement cost thereof (subject to such deductible amounts as may be provided in the Supplementary Conditions or required by Laws or Regulations). This insurance shall:

1. include the interests of CITY, CONTRACTOR, Subcontractors, and any other persons or entities identified in the Supplementary Conditions, each of whom is deemed to have an insurable interest and shall be listed as an insured or additional insured;

2. be written on a Builder's Risk "all-risk" or open peril or special causes of loss policy form that shall at least include insurance for physical loss or damage to the Work, temporary buildings, falsework and materials and equipment in transit, and shall insure against at least the following perils or causes of loss: fire, lightning, extended coverage, theft, vandalism and malicious mischief, earthquake, tornado, collapse, debris removal, demolition occasioned by enforcement of Laws or Regulations, water damage, damage caused by frost and freezing, and acts of God;

3. be maintained in effect until final payment is made unless otherwise agreed to in writing by CITY with thirty (30) days written notice to each other additional insured to whom a certificate of insurance has been issued.

B. CITY shall not be responsible for purchasing and maintaining any property insurance to protect the interests of CONTRACTOR, Subcontractors or others involved in the Work to the extent of any deductible amounts. The risk of loss within the deductible amounts will be borne by CONTRACTOR, Subcontractor or others suffering any such loss and if any of them wishes property insurance coverage within the limits of such amounts, each may purchase and maintain it at the purchaser's own expense.

5.07 Waiver of Rights

A. CITY and CONTRACTOR intend that all policies purchased in accordance with Paragraphs 5.04 and 5.06 will protect CITY, CONTRACTOR, DESIGN PROFESSIONAL Consultants, Subcontractors, and all other persons or entities identified in the Supplementary Conditions to be listed as insureds or additional insureds in such policies and will provide primary coverage for all losses and damages caused by the perils covered thereby. All such policies shall contain provisions to the effect that in the event of payment of any loss or damage the insurers will have no rights of recovery against any of the insureds or additional insureds thereunder. CITY and CONTRACTOR waive all rights against each other and their respective officers, directors, partners, employees and agents for all losses and damages caused by, arising out of or resulting from any of the perils covered by such policies and any other property insurance applicable to the Work, but only to the extent of insurance coverage; and, in addition, waive all such rights against DESIGN PROFESSIONAL, Consultants, Subcontractors, and all other persons or entities identified in the Supplementary Conditions to be listed as insureds or additional insureds (and the officers, directors, partners, employees, agents, and other consultants and subcontractors of any and each of them) under such policies for losses and damages so caused and covered by insurance. None of the above waivers shall extend to the rights that any party making such waiver may have to the proceeds of insurance held by CITY as trustee or otherwise payable under any policy so issued. None of the above waivers shall apply if specifically in conflict with Laws and Regulations.

5.08 Receipt and Application of Insurance Proceeds

A. Any insured loss under the property insurance will be adjusted with CITY and made payable to CITY as fiduciary for the insureds, as their interests may appear, subject to the requirements of any indentures of indebtedness entered into by CITY.

B. CITY as fiduciary shall have power to adjust and settle any loss with the insurers unless one of the parties in interest shall object to CITY's exercise of this power in writing within fifteen (15) days after the occurrence of loss. If such objection is made, CITY as fiduciary shall make settlement with the insurers in accordance with such agreement as the parties in interest may reach. If no such agreement among the parties in interest is reached, CITY as fiduciary shall adjust and settle the loss with the insurers.

5.09 Partial Utilization – Property Insurance

A. If CITY finds it necessary to occupy or use a portion or portions of the Work prior to Substantial Completion of all the Work, such use or occupancy may be accomplished in accordance with Paragraph 14.05; provided that no such use or occupancy shall commence before the insurers providing the property insurance have acknowledged notice thereof and in writing effected any changes in coverage necessitated thereby. The insurers providing the property insurance shall consent by endorsement on the policy or policies, but the property insurance shall not be canceled or permitted to lapse on account of any such partial use or occupancy.

ARTICLE 6 CONTRACTOR'S RESPONSIBILITIES

6.01 Indemnification

A. For purposes of this Paragraph 6.01 only, the following terms shall have the meanings listed:

1. Claims means all claims, damages, liability, losses, costs and expenses, including court costs and reasonable attorneys''' fees, including attorney's fees incurred by the City in the enforcement of this indemnity obligation.

2. CONTRACTOR'S Agents means CONTRACTOR's officers, employees, sub-consultants, subcontractors, successors, assigns, invitees, and other agents.

3. CITY means CITY, its Program Manager/Construction Advisor and any of their agents, officials, officers, employees and program managers or construction advisors.

B. CONTRACTOR's obligations under this Paragraph with respect to indemnification for acts or omissions, including negligence, of CITY, shall be limited to the coverage and limits of insurance that CONTRACTOR is required to procure and maintain under this Contract. CONTRACTOR affirms that it has had the opportunity to recover the costs of the liability insurance required in this Contract in its contract price.

C. CONTRACTOR shall defend, indemnify and hold harmless CITY from and against all Claims arising out of or resulting from all acts or omissions in connection with this Contract caused in whole or in part by CONTRACTOR or CONTRACTOR's Agents, regardless of whether or not caused in part by any act or omission, including negligence, of OWNER.

D. In any and all Claims against CITY, DESIGN PROFESSIONAL, CONSULTANT, or any of their respective agents, officers, directors or employees by any employee (or the survivor or personal representative of such employee) of CONTRACTOR, any Subcontractor, any Supplier, any person or organization directly or indirectly employed by any of them to perform or furnish any of the Work, or anyone for whose acts any of them may be liable, the indemnification obligation under Paragraph 6.01 C shall not be limited in any way by any limitation on the amount or type of damages, compensation or benefits payable by or for CONTRACTOR or any such Subcontractor, Supplier or other person or organization under workers' compensation acts, disability benefit acts or other employee benefit acts.

E. The indemnification obligations of CONTRACTOR under Paragraph 6.01 C shall not extend to liability arising out of, resulting from, or caused by the professional negligence, errors or omissions of DESIGN PROFESSIONAL, CONSULTANT, or any of their respective agents, officers, directors or employees.

6.02 Supervision and Superintendence

A. CONTRACTOR shall supervise, inspect and direct the Work competently and efficiently, devoting such attention thereto and applying such skills and expertise as may be necessary to perform the Work in accordance with the Contract Documents. CONTRACTOR shall be solely responsible for the means, methods, techniques, sequences and procedures of construction, but CONTRACTOR shall not be responsible for the negligence of others in the design or specification of a specific means, method, technique, sequence or procedure of construction which is shown or indicated in and expressly required by the Contract Documents. CONTRACTOR shall be responsible to see that the completed Work complies accurately with the Contract Documents.

B. At all times during the progress of the Work, CONTRACTOR shall assign a competent resident superintendent of the Work, who shall not be replaced without written request to and approval by CITY except under extraordinary circumstances. The superintendent will be CONTRACTOR's representative at the Site and shall have authority to act on behalf of CONTRACTOR. All communications given to or received from the superintendent shall be binding on CONTRACTOR.

C. If it is determined to be in the best interest of the Work, CONTRACTOR shall replace the project manager, resident superintendent or any other employee of the CONTRACTOR, Subcontractors, Suppliers or other persons or organizations performing or furnishing any of the Work on the project upon written request by the CITY.

6.03 Services, Working Hours, Labor, Materials and Equipment

A. CONTRACTOR shall provide competent, suitably qualified personnel to survey, lay out and construct or perform the Work as required by the Contract Documents. CONTRACTOR shall at all times maintain good discipline and order at the Site. Except as otherwise required for the safety or protection of persons or the Work or property at the Site or adjacent thereto, and except as otherwise indicated in the Contract Documents, all Work at the Site shall be performed during regular working hours. CONTRACTOR shall not permit overtime work or the performance of Work on Saturday, Sunday or any legal holiday without CITY's written consent given after prior written notice to DESIGN PROFESSIONAL.

B. Unless otherwise specified in Division 1, General Requirements, CONTRACTOR shall furnish and assume full responsibility for all services, materials, equipment, labor, transportation, construction equipment and machinery, tools, appliances, fuel, power, light, heat, telephone, water, sanitary facilities, temporary facilities and all other facilities and incidentals necessary for the furnishing, performance, testing, start-up and completion of the Work.

C. All materials and equipment shall be of good quality and new, except as otherwise provided in the Contract Documents. All warranties and guarantees specifically called for by the Specifications shall expressly run to the benefit of CITY. If required by DESIGN PROFESSIONAL, CONTRACTOR shall furnish satisfactory evidence (including reports of required tests) as to the source, kind, and quality of materials and equipment. All materials and equipment shall be stored, applied, installed, connected, erected, used, cleaned and conditioned in accordance with instructions of the applicable Supplier, except as otherwise provided in the Contract Documents.

D. It is the policy of the CITY that any manufactured goods or commodities used or supplied in the performance of this Contract and any subcontract hereto shall be manufactured or produced in the United States whenever possible.

6.04 Progress Schedule

A. CONTRACTOR shall adhere to the progress schedule established in accordance with Article 2 as it may be adjusted from time to time as provided below:

1. CONTRACTOR shall provide, at least once every thirty (30) calendar days, updated information on the project schedule, including thirty (30) day look ahead schedules, projected variances per event category and per Subcontractor, identification of all variances and calculation of the number of Days difference between the as-built critical path and the project schedule critical path

2. CONTRACTOR shall, with each application for payment, provide completed monthly updated status report for the previous month on the project schedule and updated information indicating as-built and as-planned conditions. The updated information on the project schedule shall not modify any Milestone dates in the project schedule that CITY has previously approved. The updated information required is a condition precedent to payment pursuant to paragraph 14.02 and shall include at a minimum:

a. a concise statement of the outlook for meeting project schedule dates and the reasons for any change in outlook from the previous report;

b. a review of any significant technical problems encountered during the month;

c. an explanation of any corrective action taken or proposed; and

d. a summary of any Claims anticipated by CONTRACTOR with respect to the Work, including the anticipated costs and schedule impacts of any such Claims.

6.05 Recovery Schedules

A. If the CONTRACTOR should:

1. fail, refuse or neglect to supply a sufficient number of workers or to deliver the materials or equipment with such promptness as to prevent the delay in the progress of the Work;

2. fail in any respect to commence and diligently prosecute the Work in accordance with the approved baseline project schedule in order to achieve substantial completion;

3. fail to commence, prosecute, finish, deliver or install the different portions of the Work on time as specified in the approved baseline project schedule; or

4. fail in the performance of any of the material covenants of the Contract Documents;

CITY shall have the right to direct the CONTRACTOR, upon seven (7) calendar days notice, to prepare a written recovery plan, for CITY's approval, to accelerate the Work in order to conform to the approved baseline project schedule, including, without limitation, providing additional labor or expediting delivery of materials, performing overtime or re-sequencing the Work without adjustments to the Contract value. Upon CITY's approval of the recovery plan, CONTRACTOR shall accelerate the Work in accordance with the plan.

B. Proposed recovery schedules shall be submitted to the CITY as a separate project plan for review and approval by CITY prior to incorporation into the approved baseline schedule. The recovery schedule shall be submitted in a format compatible with the baseline schedule format. Each proposed revision shall be submitted as a separate schedule, with the following minimum requirements:

1. A critical path method diagram showing revised and affected activities or Milestones.

2. An activity report for all revised and affected activities or Milestones.

C. Upon acceptance of the recovery schedule by CITY, data shall be added or revised for all new or revised activities and incorporated into the approved baseline project schedule.

6.06 Substitutes and "Or-Equal" Items

A. Materials or equipment: Whenever an item of material or equipment is specified or described in the Contract Documents by using the name of a proprietary item or the name of a particular Supplier, the specification or description is intended to establish the type, function, appearance and quality required. Unless the specification or description contains, or is followed by, words reading that no like, equivalent or "or-equal" item or no substitution is permitted, other items of material or equipment or material or equipment of other Suppliers may be submitted to CITY for review by CITY's Representative under the following circumstances:

1. "Or-Equal": If, prior to receipt of Bids, Bidder proposes an item of material or equipment as functionally equal to that named and sufficiently similar so that no change in related Work will be required, CITY's Representative may request DESIGN PROFESSIONAL to consider it as an "or-equal" item. DESIGN PROFESSIONAL will review and recommend the acceptance, or rejection, of the proposed item to the CITY's Representative. For the purposes of this Paragraph, a proposed item of material or equipment will be considered functionally equal to an item so named if:

a. in the exercise of reasonable judgment DESIGN PROFESSIONAL determines that:

(1) it is at least equal in quality, durability, appearance, strength, and design characteristics; and

(2) it will reliably perform at least equally well the function imposed by the design concept of the completed Project as a functioning whole; and

b. Bidder certifies that:

(1) there is no increase in cost to the CITY; and

(2) it will conform substantially, even with deviations, to the detailed requirements of the item named in the Contract Documents.

If the CITY's Representative approves the proposed item, it may be accepted by CITY.

2. Substitute Items: If CONTRACTOR proposes an item of material or equipment as a substitute item, then CONTRACTOR shall submit sufficient information as provided below to allow CITY's Representative to determine that the item of material or equipment proposed is essentially equivalent to that named and an acceptable substitute therefore. The procedure for review by the CITY's Representative will include the following as supplemented in the General Requirements and as CITY's Representative may determine is appropriate under the circumstances:

a. Requests for review of proposed substitute items of material or equipment will not be accepted by CITY's Representative from anyone other than CONTRACTOR.

b. If CONTRACTOR wishes to furnish or use a substitute item of material or equipment, CONTRACTOR shall first make written application to CITY's Representative for acceptance thereof.

c. In the application, CONTRACTOR shall certify that the proposed substitute will perform adequately the functions and achieve the results called for by the general design, be similar in substance to that specified and be suited to the same use as that specified. The application will state the extent, if any, to which the evaluation and acceptance of the proposed substitute will impact CONTRACTOR's achievement of Substantial Completion, whether or not acceptance of the substitute for use in the Work will require a change in any of the Contract Documents (or in the provisions of any other direct contract with CITY for work on the Project) to adapt the design to the proposed substitute and whether or not incorporation or use of the substitute in connection with the Work is subject to payment of any license fee or royalty.

d. All variations of the proposed substitute from that specified will be identified in the application and available maintenance, repair and replacement service will be indicated. The application will also contain an itemized estimate of all costs or credits that will result directly or indirectly from acceptance of such substitute, including costs of redesign and claims of other contractors affected by the resulting change, all of which will be considered by CITY's Representative in evaluating the proposed substitute. CITY's Representative may require CONTRACTOR to furnish additional data about the proposed substitute.

If the CITY's Representative approves the proposed item, CITY may accept it.

B. Substitute Construction Methods or Procedures: If a specific means, method, technique, sequence or procedure of construction is shown or indicated in and expressly required by the Contract Documents, CONTRACTOR may furnish or utilize a substitute means, method, technique, sequence or procedure of construction acceptable to DESIGN PROFESSIONAL. CONTRACTOR shall notify CITY and submit sufficient information to allow DESIGN PROFESSIONAL, in DESIGN PROFESSIONAL's sole discretion, to determine that the substitute proposed is equivalent to that expressly called for by the Contract Documents.

C. Expenses: Bidder shall provide all data in support of any "or equal" at Bidder's expense, and CONTRACTOR shall provide all data in support of any proposed substitute at CONTRACTOR's expense.

D. Evaluation: DESIGN PROFESSIONAL and CITY's Representative will be allowed a reasonable time within which to evaluate each proposal or submittal made pursuant to Paragraphs 6.06 A, and 6.06 B. CITY will be the sole judge of acceptability. No "or-equal" or substitute will be ordered, installed or utilized without CITY's prior written acceptance which will be evidenced by either a Change Order or an approved Shop Drawing. CITY may require CONTRACTOR to furnish at CONTRACTOR's expense, a special performance guarantee or other surety with respect to any "or-equal' substitute. DESIGN PROFESSIONAL will record time required by DESIGN PROFESSIONAL and Consultants in evaluating substitutes proposed or submitted by CONTRACTOR pursuant to Paragraphs 6.06 A and 6.06 B and in making changes in the Contract Documents (or in the provisions of any other direct contract with CITY for work on the Project) occasioned thereby. Whether or not CITY accepts a substitute so proposed or submitted by CONTRACTOR, CONTRACTOR shall reimburse CITY for the reasonable charges of DESIGN PROFESSIONAL and Consultants for evaluating each such proposed substitute.

6.07 Concerning Subcontractors, Suppliers and Others

A. CONTRACTOR shall not employ or retain any Subcontractor, Supplier or other person or organization (including those acceptable to CITY as indicated in Paragraph 6.07 B), whether initially or as a substitute, against whom CITY has a reasonable objection, including but not limited to debarment by City or another governmental entity or decertification of the Subcontractor from the City's Minority and Women's Business Enterprise Program as a result of the Subcontractor's failure to comply with any of the requirements of the provisions of Chapter 3 of the City's Code as determined by the Director of the Civil Rights and Equal Opportunity Department. Contractor shall insert this provision in any subcontractor agreement associated with this Contract. CONTRACTOR shall not be required to employ any Subcontractor, Supplier or other person or organization to furnish or perform any of the Work against whom CONTRACTOR has reasonable objection. CONTRACTOR shall submit required information for all Subcontractors on Form 01290.09 - Subcontractor and Major Material Suppliers List, provided in these Contract Documents, prior to Subcontractor beginning Work at the Site.

B. The Supplementary Conditions require the identity of certain Subcontractors, Suppliers or other persons or organizations (including those who are to furnish the principal items of materials or equipment) to be submitted to CITY on or before the date specified in the Supplementary Conditions, for acceptance by CITY. If CONTRACTOR has submitted a list

thereof in accordance with the Supplementary Conditions, CITY may accept (either in writing or by failing to make written objection thereto by the date indicated for acceptance or objection in the Contract Documents) any such Subcontractor, Supplier or other person or organization so identified, or may reject same on the basis of reasonable objection after due investigation, in which case CONTRACTOR shall submit an acceptable replacement for the rejected Subcontractor, Supplier or other person or organization. The Contract Price will be adjusted by the difference in the cost occasioned by such substitution, and an appropriate Change Order will be issued or Written Amendment signed. No acceptance by CITY of any such Subcontractor, Supplier or other person or organization shall constitute a waiver of any right of CITY or DESIGN PROFESSIONAL to reject defective Work.

C. CONTRACTOR shall be fully responsible to CITY for all acts and omissions of the Subcontractors, Suppliers and other persons and organizations performing or furnishing any of the Work under a direct or indirect contract with CONTRACTOR just as CONTRACTOR is responsible for CONTRACTOR's own acts and omissions. Nothing in the Contract Documents shall create for the benefit of any such Subcontractor, Supplier or other person or organization any contractual relationship between CITY or DESIGN PROFESSIONAL and any such Subcontractor, Supplier or other person or organization, nor shall it create any obligation on the part of CITY or DESIGN PROFESSIONAL to pay or to see to the payment of any moneys due any such Subcontractor, Supplier or other person or organization except as may otherwise be required by Laws or Regulations.

D. CONTRACTOR shall be solely responsible for scheduling and coordinating the Work of Subcontractors, Suppliers and other persons and organizations performing or furnishing any of the Work under a direct or indirect contract with CONTRACTOR.

E. CONTRACTOR shall contractually require all Subcontractors, Suppliers and such other persons and organizations performing or furnishing any of the Work to communicate with CITY and DESIGN PROFESSIONAL through CONTRACTOR.

F. The divisions and sections of the Specifications and the identifications of any Drawings shall not control CONTRACTOR in dividing the Work among Subcontractors or Suppliers or delineating the Work to be performed by any specific trade.

G. All Work performed for CONTRACTOR by a Subcontractor or Supplier shall be pursuant to an appropriate written agreement between CONTRACTOR and the Subcontractor or Supplier that specifically binds the Subcontractor or Supplier to the applicable terms and conditions of the Contract Documents for the benefit of CITY. Whenever any such agreement is with a Subcontractor or Supplier who is listed as an additional insured on the property insurance provided in Paragraph 5.06, the agreement between the CONTRACTOR and the Subcontractor or Supplier will contain provisions whereby the Subcontractor or Supplier waives all rights against CITY, CONTRACTOR, DESIGN PROFESSIONAL, Consultants and all other additional insureds for all losses and damages caused by, arising out of or resulting from any perils, to the extent covered by such policies and any other property insurance applicable to the Work. If the insurers on any such policies require separate waiver forms to be signed by any Subcontractor or Supplier, CONTRACTOR will obtain the same.

H. Except as otherwise provided in this subsection H and in accordance with the provisions of subsection C hereof, the agreement between CONTRACTOR and the Subcontractor or Supplier referred to in subsection G, shall provide that the CONTRACTOR and the Subcontractor or Supplier agree not to request CITY or CITY's Representative to intervene in or facilitate the resolution of claims or contract disputes arising out of or related to the agreement between CONTRACTOR and the Subcontractor or Supplier. Furthermore, the Contracts between CONTRACTOR and Subcontractors or Suppliers shall provide that all unresolved claims and disputes between CONTRACTOR and the Subcontractor or Supplier that remain unresolved after thirty (30) calendar days from the notice of claim, shall be subject to mediation as a condition precedent to the institution of legal proceedings by either party. Any such mediation shall be conducted in accordance with the CITY's Code Section 3-467.

I. CONTRACTOR shall not insert any provision in any subcontractor agreement associated with this Contract that explicitly states or implies that the subcontractor shall only be paid for work performed if or when the general CONTRACTOR is paid by the CITY . Contractor's compliance with this provision is a material term of this Contract.

J. CONTRACTORS shall not deny any Subcontractor subcontracting opportunities solely because the Subcontractor is not a signatory to collective bargaining agreements with organized labor.

6.08 Patent Fees and Royalties

A. CONTRACTOR shall pay all license fees and royalties and assume all costs incident to the use in the performance of the Work or the incorporation into the Work of any invention, design, process, product or device which is the subject of patent rights or copyrights held by others. If a particular invention, design, process, product or device is specified in the Contract Documents for use in the performance of the Work, and if to the actual knowledge of CITY or DESIGN PROFESSIONAL its use is subject to patent rights or copyrights calling for the payment of any license fee or royalty to others, the existence of such rights shall be disclosed by CITY in the Contract Documents. To the fullest extent permitted by Laws or Regulations, CONTRACTOR shall defend, indemnify and hold harmless CITY, DESIGN PROFESSIONAL, Consultants and the officers, directors, employees, agents and other consultants of each and any of them from and against all claims, costs, losses and damages (including but not limited to all fees and charges of engineers, architects, attorneys, and other professionals and all court or arbitration or other dispute resolution costs) arising out of or resulting from any infringement of patent rights or copyrights incident to the use in the performance of the Work or resulting from the incorporation into the Work of any invention, design, process, product or device not specified in the Contract Documents.

6.09 Permits

A. Unless otherwise provided in the Supplementary Conditions, CONTRACTOR shall obtain and pay for all construction permits and licenses. CITY shall assist CONTRACTOR, when necessary, in obtaining such permits and licenses. CONTRACTOR shall pay all governmental charges and inspection fees necessary for the prosecution of the Work, which are applicable at the time of opening of Bids, or, if there are no Bids, on the Effective Date of the Contract. CONTRACTOR shall pay all charges of utility owners for connections to the Work.

B. CONTRACTOR, at its own expense, shall comply with all Federal, State and local laws and regulations, including, but not limited to the Missouri Clean Water Law (Chapter 644 RSMo) together with any accompanying regulation(s) contained in the Missouri Code of State Regulations (CSR Title 10), as well as any implementing permits, together with any CITY Provisions during the life of this Contract including but not limited to:

1. Approvals and permits as required for construction or land disturbance activities.

2. Compliance with the State of Missouri – Department of Natural Resources ("MDNR") Missouri State Operating Permit ("Land Disturbance Permit"), MO-R100006 for all construction or land disturbance activity.

3. Development and implementation of a Storm Water Pollution Prevention Plan (SWPPP).

(a) Contractor shall not commence land disturbance activity until the initial SWPPP has been finalized.

(b) Preparation and submittal of all applications, documentation and exhibits required to obtain MDNR approvals for uninterrupted Work at the Site.

(c) Amending/Updating SWPPP.

(d) Site Inspections and submittal of Inspection Reports

(e) Proper Operation and Maintenance to achieve compliance with the terms of the Permit.

(f) Maintenance of required records in accordance with MDNR requirements and requirements included in Article 6 of these Contract Documents.

4. In addition to requirements of Article 6, Contractor shall also provide record access to Missouri Department of Natural Resources (MDNR).

5. Failure to control erosion and water pollution is a permit violation. CONTRACTOR shall have 24 hours after receiving notice of the violation to correct the problem. If the CONTRACTOR fails to correct the problem after the time prescribed, the City will hire a remediation expert to fix the problem. In such an event, the CONTRACTOR shall be liable to the City for the remediation costs plus a 10% mark-up of the total contract price. If the CONTRACTOR receives three (3) notices of violation of the erosion control plan and the City's MS4 permit, the Director may issue a stop work order and delay any payment until control measures are properly functioning and stream damage has been mitigated. In such an event, any delay to the project schedule will result in liquidated damages assessed against the CONTRACTOR.

6.10 Compliance with Laws and Regulations

A. CONTRACTOR shall comply with all federal, state and local laws, ordinances and regulations applicable to the work and this Contract. CONTRACTOR shall give all notices and comply with all Laws or Regulations applicable to furnishing and performing the Work. Except where otherwise expressly required by applicable Laws or Regulations, neither CITY nor DESIGN PROFESSIONAL shall be responsible for monitoring CONTRACTOR's compliance with any Laws or Regulations. The Laws or Regulations included in this Paragraph shall include, but not be limited to, those set forth in the Supplementary Conditions.

B. **Failure to Comply**. If CONTRACTOR performs any Work in violation of applicable Laws or Regulations, CONTRACTOR shall bear all claims, costs, losses and damages (including but not limited to all fees and charges of engineers, architects, attorneys, and other professionals and all court or arbitration or other dispute resolution costs) caused by, arising out of or resulting therefrom; however, it shall not be CONTRACTOR's primary responsibility to make certain that the Specifications and Drawings are in accordance with Laws or Regulations, but this shall not relieve CONTRACTOR of CONTRACTOR's obligations under Paragraph 3.03.

C. **Conflicts of Interest**. The provisions of City's Code Sections 2-2001 and 3-301, prohibiting City officers and employees from having a financial or personal interest in any contract with City, and Code Sections 3-307, and 3-309, imposing sanctions for violations, shall apply to this Contract. CONTRACTOR certifies that no officer or employee of City has, or will have, a direct or indirect financial or personal interest in this Contract, and that no officer or employee of City, or member of such officer's or employee's immediate family, either has negotiated, or has or will have an arrangement concerning employment to perform services on behalf of CONTRACTOR on this Contract.

D. **Licenses and Permits**. CONTRACTOR, at its own expense, shall secure or cause to be secured all licenses and permits from public or private sources necessary for the fulfillment of its obligations under this Contract. All references in this Contract to the "Code" shall mean City's Code of Ordinances, including any amendments thereto or re-codification thereof unless the context clearly indicates otherwise. CONTRACTOR shall obtain copies of all necessary licenses and permits from Subcontractors required for the Work before Subcontractors begin Work at the Site. CONTRACTOR shall retain such evidence in its files and make available to CITY within ten (10) days after CITY's written request.

E. Americans with Disabilities Act. CONTRACTOR agrees to comply, during the course of this Contract, with all provisions of Title II of the 2010 ADA Standards for Accessible Design as amended from time to time.

F. Affirmative Action. If the Contract Price exceeds $300,000.00 and CONTRACTOR employs fifty (50) or more people, CONTRACTOR shall comply with City's Affirmative Action requirements in accordance with the provisions of Chapter 3 of City's Code, the rules and regulations relating to those sections, and any additions or amendments thereto. CONTRACTOR shall not discriminate against any employee or applicant for employment because of race, color, sex, religion, national origin or ancestry, disability, sexual orientation, gender identity or age in a manner prohibited by Chapter 3 of City's Code.

CONTRACTOR shall:

1. Submit, in print or electronic format, a copy of CONTRACTOR'S current certificate of compliance to the City's Civil Rights and Equal Opportunity Department (CREO) prior to receiving the first payment under the contract, unless a copy has already been submitted to CREO at any point within the previous two calendar years. If, and only if, CONTRACTOR does not possess a current certification of compliance, CONTRACTOR shall submit, in print or electronic format, a copy of its affirmative action program to CREO prior to receiving the first payment under the contract, unless a copy has already been submitted to CREO at any point within the previous two calendar years.

2. Require any Subcontractor awarded a subcontract exceeding $300,000.00 to affirm that Subcontractor has an affirmative action program in place and will maintain the affirmative action program in place for the duration of the subcontract.

3. Obtain from any Subcontractor awarded a subcontract exceeding $300,000.00 a copy of the Subcontractor's current certificate of compliance and tender a copy of the same, in print or electronic format, to CREO within thirty (30) days from the date the subcontract is executed. If, and only if, Subcontractor does not possess a current certificate of compliance, CONTRACTOR shall obtain a copy of the Subcontractor's affirmative action program and tender a copy of the same, in print or electronic format, to CREO within thirty (30) days from the date the subcontract is executed.

City has the right to take action as directed by City's Civil Rights and Equal Opportunity Department to enforce this provision. If CONTRACTOR fails, refuses or neglects to comply with the provisions of Chapter 3 of City's Code, then such failure shall be deemed a total breach of this Contract and this Contract may be terminated, canceled or suspended, in whole or in part, and CONTRACTOR may be declared ineligible for any further contracts funded by City for a period of one (1) year. This is a material term of this Contract.

G. **Minority and Women Business Enterprises and Workforce**. City is committed to ensuring that minorities and women participate to the maximum extent possible in the performance of City's construction contracts. If minority and women business enterprise (M/WBE) goals have been set for this Contract, CONTRACTOR agrees to comply with all requirements of City's Minority and Women's Business Enterprise Program as enacted in City's Code, Sections 3-421 through 3-469 and as hereinafter amended. CONTRACTOR shall meet or exceed both the MBE and WBE goals set forth in its Contractor Utilization Plan/Request for Waiver. If workforce utilization goals are applicable to this Contract, CONTRACTOR agrees to comply with all requirements of City's Construction Employment Program as enacted in City's Code, Sections 3-501 through 3-527 and as hereinafter amended. CONTRACTOR shall meet or exceed the construction employment goals unless the same shall have been waived in the manner provided by law. CONTRACTOR's compliance with this provision is a material part of this Contract.

H. **Records.**

1. For purposes of this section:

(a) "City" shall mean the City Auditor, the City's Internal Auditor, the City's Director of Civil Rights and Equal Opportunity, the City Manager, the City department administering this Contract and their delegates and agents.

(b) “Record” shall mean any document, book, paper, photograph, map, sound recordings or other material, regardless of physical form or characteristics, made or received in connection with this Contract and all Contract amendments and renewals.

2. CONTRACTOR shall maintain and retain all Records for a term of five (5) years that shall begin after the expiration or termination of this Contract and all Contract amendments. City shall have a right to examine or audit all Records and CONTRACTOR shall provide access to City of all records upon ten (10) days written notice from the City.

I. Prevailing Wage.

1. CONTRACTOR shall comply and require its Subcontractors to comply with;

a. sections 290.210 to 290.340, RSMO the State of Missouri Prevailing Wage Law (the “Law”); and

b. 8 CSR 30-3.010 to 8 CSR 30-3.060, the Prevailing Wage Law Rules (the “Rules”); and

c. the Annual Wage Order (Wage Order) issued by the State of Missouri’s Department of Labor and Industrial Relations; and

d. any applicable Annual Incremental Wage Increase (Wage Increase) to the Annual Wage Order.

2. The Law, Rules, Annual Wage Order and any Wage Increase are incorporated into and made part hereof this Contract and shall be collectively referred to in this Section as the “Prevailing Wage Requirements.”

3. CONTRACTOR shall pay and require its Subcontractors to pay to all workers performing work under this Contract not less than the prevailing hourly rate of wages for the class or type of work performed by the worker in accordance with the Law, Rules, Wage Order and any applicable Wage Increase. CONTRACTOR shall take whatever steps are necessary to insure that the prevailing hourly wage rates are paid and that all workers for CONTRACTOR and each of its Subcontractors are paid for the class or type of work performed by the worker in accordance with the Prevailing Wage Requirements. If CONTRACTOR shall fail to start to perform CONTRACTOR’s obligations under the Contract Documents within sixty (60) days from the Effective Date of the Contract, CONTRACTOR and each of its subcontractors shall be obligated to pay all workers in accordance with any new Wage Order, as subsequently amended by any applicable Wage Increase, issued by the Department of Labor and Industrial Relations within the aforementioned sixty (60) day period. The new Wage Order and any applicable Wage Increase shall govern notwithstanding the fact that the Wage Order being replaced might be physically attached or incorporated in the Contract Documents.

4. Prior to each of its Subcontractors beginning Work on the Site, CONTRACTOR shall require each Subcontractor to complete CITY’s Form 00490 entitled “Pre-contract Certification” that sets forth the Subcontractor’s prevailing wage and tax compliance history for the two (2) years prior to the bid. CONTRACTOR shall retain one (1) year and make the Pre-contract Certifications available to CITY within five (5) days after written request.

5. CONTRACTOR shall:

a. Keep and require each of its Subcontractors engaged in the construction of public works in performance of the Contract to keep full and accurate records on City’s “Daily Labor Force Report” Form indicating the worker’s name, occupational title or classification group & skill and the workers’ hours. City shall furnish blank copies of the Daily Labor Force Report Form to Contractor for its use and for distribution to Subcontractors. Contractor shall submit its and its Subcontractors Daily Labor Force Reports to City each day; and

b. Submit, and require each of its Subcontractors engaged in the construction of public works in performance of the Contract to submit electronically, in a format prescribed by the City, Certified Payroll Report Information indicating the worker's name, address, social security number, occupation(s), craft(s) of every worker employed in connection with the public work together with the number of hours worked by each worker and the actual wages paid in connection with the Project and other pertinent information as requested by the City; and

c. Submit, and require each of its Subcontractors engaged in the construction of public works in performance of the Contract to submit, electronically, in format prescribed by the City, a Payroll Certification. The Payroll Certification must be signed by the employee or agent who pays or supervises the payment of the workers employed under the Contract for the Contractor and each Subcontractor; and

d. The Daily Labor Force Report, documents used to compile information for the Certified Payroll Report, and Payroll Certification are collectively referred to in this Section as the "Records."

6. CONTRACTOR shall submit its and its Subcontractors Daily Labor Force Reports to CITY each day. CONTRACTOR shall make all of CONTRACTOR's and Subcontractors' Records open to inspection by any authorized representatives of OWNER and the Missouri Department of Labor and Industrial Relations at any reasonable time and as often as they may be necessary and such Records shall not be destroyed or removed from the State of Missouri for a period of one (1) year following the completion of the public work in connection with which the Records are made. CONTRACTOR shall have its and its Subcontractors Certified Payroll Reports and Payroll Certifications available at the CONTRACTOR's office and shall provide the Records to the City electronically at City's sole discretion. In addition, all Records shall be considered a public record and CONTRACTOR shall provide the Records to the CITY in the format required by the CITY within three (3) working days of any request by CITY at the CONTRACTOR's cost. CITY, in its sole discretion, may require CONTRACTOR to send any of the Records directly to the person who requested the Record at CONTRACTOR's expense.

7. CONTRACTOR shall post and keep posted a clearly legible statement of all prevailing hourly wage rates to be paid to all workers employed by CONTRACTOR and each of its Subcontractors in the performance of this Contract in a prominent and easily accessible place at the Site of the Work by all workers.

8. If the Contract Price exceeds $250,000.00, CONTRACTOR shall and shall require each Subcontractor engaged in any construction of public works to have its name, acceptable abbreviation or recognizable logo and the name of the city and state of the mailing address of the principal office of the company, on each motor vehicle and motorized self-propelled piece of equipment which is used in connection with the Project during the time the CONTRACTOR or Subcontractor is engaged on the project. The sign shall be legible from a distance of twenty (20') feet, but the size of the lettering need not be larger than two (2") inches. In cases where equipment is leased or where affixing a legible sign to the equipment is impractical, the CONTRACTOR may place a temporary stationary sign, with the information required pursuant to this section, at the main entrance of the Project in place of affixing the required information on the equipment so long as such sign is not in violation of any state or federal statute, rule or regulation. Motor vehicles which are required to have similar information affixed thereto pursuant to requirements of a regulatory agency of the state or federal government are exempt from the provisions of this subsection.

9. CONTRACTOR must correct any errors in CONTRACTOR's or any Subcontractors' Records, or CONTRACTOR's or any Subcontractors' violations of the Law, Rules, Annual Wage Order and any Wage Increase within fourteen (14) calendar days after notice from CITY.

10. CONTRACTOR shall and shall require its Subcontractors to cooperate with the CITY and the Department of Labor and Industrial Relations in the enforcement of this Section, the Law, Rules, Annual Wage Order and any Wage Increase. Contractor shall and shall require its Subcontractors to permit CITY and the Department of Labor and Industrial Relations to interview any and all workers during working hours on the Project at CONTRACTOR's sole cost and expense.

11. CONTRACTOR shall file with CITY, upon completion of the Project and prior to final payment therefore, affidavits from CONTRACTOR and each of its Subcontractors, stating that each has fully complied with the provisions and requirements of the Missouri Prevailing Wage Law. CITY shall not make final payment until the affidavits, in proper form and order, from CONTRACTOR and each of its Subcontractors, are filed by CONTRACTOR.

12. CONTRACTOR shall forfeit as a statutory penalty to the CITY one hundred dollars ($100.00) for each worker employed, for each calendar day, or portion thereof, such worker is paid less than the prevailing hourly rates for any work done under this Contract, by CONTRACTOR or by any of CONTRACTOR's Subcontractors. If CONTRACTOR or any of its Subcontractors have violated any section(s) of 290.210 to 290.340, RSMo, in the course of the execution of the Contract, CITY shall when making payments to the CONTRACTOR becoming due under this Contract, withhold and retain therefrom all sums and amounts due and owing as a result of any violation of sections 290.210 to 290.340, RSMo.

J. **Prevailing Wage Damages**. CONTRACTOR acknowledges and agrees that, based on the experience of CITY, violations of the Missouri Prevailing Wage Act, whether by CONTRACTOR or its Subcontractors, commonly result in additional costs to CITY. CONTRACTOR agrees that additional costs to CITY for any particular violation are difficult to establish and include but are not limited to: costs of construction delays, additional work for CITY, additional interest expenses, investigations, and the cost of establishing and maintaining a special division working under the City Manager to monitor prevailing wage compliance.

1. In the event of the failure by CONTRACTOR or any of its Subcontractors to pay wages as provided in the Missouri Prevailing Wage Act, CITY shall be entitled to deduct from the Contract Price, and shall retain as liquidated damages, one hundred dollars ($100.00) per day, per worker who is paid less than the prevailing hourly rate of wages, to approximate the additional costs. The sum shall be deducted, paid or owed whether or not the Contract Times have expired.

2. CITY shall give written notice to CONTRACTOR setting forth the workers, who have been underpaid, the amount of the statutory penalty and the amount of the liquidated damages as provided for in this Subparagraph J**.** CONTRACTOR shall have fourteen (14) calendar days to respond, which time may be extended by CITY upon written request. If CONTRACTOR fails to respond within the specified time, the CITY's original notice shall be deemed final. If CONTRACTOR responds to CITY's notice, CITY will furnish CONTRACTOR a final decision in writing within five (5) days of completing any investigation.

K. **Missouri Secretary of State Business Entity Registration**. CONTRACTOR shall obtain from all Subcontractors for the Project, a copy of their current certificate of good standing or fictitious name registration from the Missouri Secretary of State before they begin work on the Site. CONTRACTOR shall retain such documents in its files and make available to CITY within ten (10) days after written request.

L. **Tropical Hardwoods**. The provisions of Code Section 2-1872, restricting the use of tropical hardwoods, shall apply to this Contract.

M. **Preference for Missouri Products**. Pursuant to Section 71.140 RSMo., preference shall be given to materials, products, supplies and all other articles produced, manufactured, made or grown within the State of Missouri.

N. **Guidelines for Open Excavations**.

1. CONTRACTOR shall restore required excavations to the level of the adjacent surfaces as soon as practicable. Unsupervised open excavations on public properties are discouraged at all times. If CONTRACTOR, in performance of the Work, makes or causes to be made any excavation in, upon, under, through or adjoining any street, sidewalk, alley, park, boulevard, parkway or any other public properties, and shall leave any part or portion thereof open, CONTRACTOR shall provide effective protection to the public.

2. CONTRACTOR shall protect and secure all excavations in roadways in compliance with existing federal, state and local codes and standards, including, but not limited to the most current edition of the Manual of Uniform Traffic Control Devices. CONTRACTOR shall protect and secure all unsupervised excavations not within roadways, either by covering or fencing.

a. Covering. A protective cover that can sustain the weight of persons or of objects that are placed upon it may be installed over an unsupervised excavation. The cover shall be secured to the ground to prevent movement. Protective covers shall have no opening(s) or protuberance(s) of sufficient size to cause a fall and/or injury. Advance warning devices shall be installed as necessary.

b. Fencing. Fencing to prevent entry may be installed surrounding an unsupervised excavation not protectively covered in its entirety. The fencing shall be a minimum of 42" in height. The fencing shall be constructed in such a manner that it is adequately secured and will remain upright at all times under normal Site conditions. All protective coverings and fences over and around excavations shall be inspected at least daily to assure integrity. Protective coverings and/or fences in heavily trafficked areas shall be inspected more often as necessary.

O. **Notification of Utilities**. CONTRACTOR shall adhere to the provisions of Sections 319.010 et seq., RSMo., which requires that a person or firm making an excavation in any public street, road or alley, right of way dedicated to public use, utility easement of record, or within any private street or private property do so only after giving notice to, and obtaining information from, owners of Underground Facilities. The 24-hour, toll-free accident prevention hotline number in Missouri is 1-800-344-7483 (1-800-Digrite).

P. Employee Eligibility Verification. CONTRACTOR shall adhere to the provisions of Sections 285.525 et seq., RSMo., which requires that for any contract exceeding five thousand dollars ($5,000.00), CONTRACTOR shall execute and submit an affidavit, in a form prescribed by CITY, affirming that CONTRACTOR does not knowingly employ any person in connection with the contracted services who does not have the legal right or authorization under federal law to work in the United States as defined in 8 U.S.C.§ 1324a(h)(3). CONTRACTOR shall attach to the affidavit documentation sufficient to establish CONTRACTOR'S enrollment and participation in an electronic verification of work program operated by the United States Department of Homeland Security (E-Verify) or an equivalent federal work authorization program operated by the United States Department of Homeland Security to verify information of newly hired employees, under the Immigration Reform and Control Act of 1986. CONTRACTOR may obtain additional information about E-Verify and enroll at https://e-verify.uscis.gov/enroll/StartPage.aspx?JS=YES. For those Contractors enrolled in E-Verify, the first and last pages of the E-Verify Memorandum of Understanding that CONTRACTOR will obtain upon successfully enrolling in the program shall constitute sufficient documentation for purposes of complying with this Section. CONTRACTOR shall submit the affidavit and attachments to CITY prior to execution of the Contract, or at any point during the term of the Contract if requested by City.

Q. **OSHA 10-Hour Training Requirement**. CONTRACTOR and any subcontractor working under this Contract shall require every employee on the Site to complete a ten-hour construction safety program which meets the requirements of Section 292.675, RSMo, except for those employees who shall have previously completed the required program and hold documentation to that effect. CONTRACTOR shall remove or require the removal of any

person from the Site who is subject to this requirement and who does not complete or is unable to produce documentation of their successful completion of the required program within the time limitations prescribed by Section 292.675, RSMo. CONTRACTOR shall forfeit the sum of two thousand five hundred dollars ($2,500.00), in addition to one hundred dollars ($100.00) per employee each calendar day, or portion thereof, the employee(s) shall continue to be employed without having completed the required program within the time limitations prescribed by Section 292.675, RSMo. CITY shall be entitled to withhold and retain any amounts due and owing hereunder when making payment to CONTRACTOR.

R. Clean Air Act and Clean Water Act. CONTRACTOR shall comply with requirements of the Clean Air Act (42 U.S.C. 7401 *et seq*.); Clean Water Act (33 U.S.C. 1251 *et seq*.), Missouri Clean Water Law (Chapter 644 RSMo), Code of Federal regulations (Title 40: Protection of Environment, Title 33: Navigation and Navigable Waters) and the rules of the Missouri Code of State Regulations (CSR Title 10).

S. Contract information Management System. If applicable, CONTRACTOR shall comply with CITY's Contract Information Management System requirements. CONTRACTOR shall use CITY's Internet web based Contract Information Management System/Project Management Communications Tool provided by CITY and protocols included in that software during the term of this Contract. CONTRACTOR shall maintain user applications to CITY's provided system for all personnel, subcontractors or suppliers as applicable and shall require subcontractors/subconsultants to maintain same.

T. Anti-Discrimination Against Israel. If this Contract exceeds $100,000.00 and CONTRACTOR employs at least ten employees, pursuant to Section 34.600, RSMo., by executing this Contract, CONTRACTOR certifies it is not currently engaged in and shall not, for the duration of this contract, engage in a boycott of goods or services from the State of Israel; companies doing business in or with Israel or authorized by, licensed by, or organized under the laws of the State of Israel; or persons or entities doing business in the State of Israel.

U. Ban the Box in Hiring and Promotion

a. Pursuant to Section 38-104, City Code Ordinances, CONTRACTOR shall not base a hiring or promotional decision on an applicant's criminal history or sentence related thereto, unless the employer can demonstrate that the employment-related decision was based on all information available including consideration of the frequency, recentness and severity of a criminal record and that the record was reasonably related to the duties and responsibilities of the position.

b. Notwithstanding subsection (a), CONTRACTOR may inquire about an applicant's criminal history after it has been determined that the individual is otherwise qualified for the position, and only after the applicant has been interviewed for the position. Any such inquiry may be made of all applicants who are within the final selection pool of candidates from which a job will be filled.

c. This provision shall not apply to positions where employers are required to exclude applicants with certain criminal convictions from employment due to local, state or federal law or regulation.

V. Title VI of the Civil Rights Act of 1964

a. Title VI of the Civil Rights Act of 1964 requires that no person in the United States shall, on the grounds of race, color, or national or origin (including limited English proficient individuals), be excluded from participation in, be denied the benefits of, or be subjected to discrimination under any program or activity receiving federal financial assistance. The City of Kansas City, Missouri requires compliance with the requirements of Title VI in all of its programs and activities regardless of the funding source.

b. CONTRACTOR shall not discriminate on the grounds of race, color, or national or origin (including limited English proficient individuals).

W. Non-discrimination in Employment

CONTRACTOR shall not discriminate against any employee or candidate for employment on the basis of an individual's race, hair texture or hair style associated with an individual's race, color, sex, religion, national origin, or ancestry, disability, sexual orientation, gender identity or age in a manner prohibited by Chapter 38 of the City Code. CONTRACTOR shall not engage in any discrimination as prohibited by Chapter 3 of the City Code.

X. Quality Services Assurance Act

If this Contract exceeds $160,000.00, CONTRACTOR certifies that CONTRACTOR will pay all employees who will work on this Contract in the city limits of Kansas City, Missouri at least $15.00 per hour in compliance with the City's Quality Services Assurance Act, Section 3-66, Code of Ordinances unless City has granted CONTRACTOR an exemption pursuant to the Quality Services Assurance Act.

6.11 Taxes

A. CONTRACTOR shall pay all sales, consumer, use and other similar taxes required to be paid by CONTRACTOR in accordance with the Laws or Regulations of the place of the Project which are applicable during the performance of the Work.

B. **Tax Compliance**.

1. As a condition precedent to CITY making its first payment to CONTRACTOR under this Contract, CONTRACTOR shall furnish to CITY sufficient proof from City's Commissioner of Revenue, dated not more than one (1) year prior to the date provided to CITY, verifying that CONTRACTOR is in compliance with the license and tax ordinances administered by City's Revenue Division of the Finance Department.

2. As a condition precedent to Subcontractors performing any Work under this Contract, CONTRACTOR shall obtain from Subcontractor sufficient proof from City's Commissioner of Revenue, dated not more than one (1) year before the date Subcontractor begins Work, verifying that the Subcontractor is in compliance with the license and tax ordinances administered by City's Revenue Division of the Finance Department. CONTRACTOR shall retain such documentation in its files and make available to CITY within ten (10) days after a written request.

3. As a condition precedent to CITY making final payment under this Contract, if this Contract is longer than one (1) year and exceeds the dollar threshold established by ordinance and included in the Supplementary Conditions, CONTRACTOR shall furnish to CITY sufficient proof from City's Commissioner of Revenue, dated not more than one (1) year before the filing of a final Application for Payment, verifying that CONTRACTOR is in compliance with the license and tax ordinances administered by City's Revenue Division of the Finance Department.

4. If this Contract is longer than one (1) year and exceeds the dollar threshold established by ordinance and included in the Supplementary Conditions, CONTRACTOR shall obtain from Subcontractors sufficient proof from City's Commissioner of Revenue, dated not more than one (1) year before the date of CONTRACTOR's final payment to the Subcontractor, that the Subcontractor was or is in compliance with the license and tax ordinances administered by City's Revenue Division of the Finance Department. CONTRACTOR shall retain such documentation in its files and make available to CITY within ten (10) days after written request.

5. If, at the time of final payment to CONTRACTOR, CONTRACTOR is unable to obtain from all its Subcontractors, if any, and furnish to CITY sufficient proof from City's Commissioner of Revenue that all its Subcontractors are in compliance with the license and tax ordinances administered by City's Revenue Division of the Finance Department, CITY may approve final payment to CONTRACTOR if CITY determines that CONTRACTOR has made a good faith effort to furnish evidence or that there are other extenuating circumstances which make it impossible for CONTRACTOR to furnish sufficient proof.

C. **Missouri Sales Tax Exemption**. Pursuant to Section 144.062, RSMo, CITY is a Missouri exempt entity and tangible personal property to be incorporated or consumed in the construction of this Project may be purchased without sales tax. CITY shall furnish CONTRACTOR a Missouri Project Exemption Certificate for Sales Tax at the time of issuance of the Notice to Proceed.

6.12 Use of Site and Other Areas

A. CONTRACTOR shall confine construction equipment, the storage of materials and equipment, and the operations of workers to the Site and other areas identified in and permitted by the Contract Documents and other areas permitted by Laws or Regulations. CONTRACTOR shall not unreasonably encumber the Site and the other areas with construction equipment or other materials or equipment. CONTRACTOR shall assume full responsibility for any damage to the Site or the other areas, or to the owner or occupant thereof, or of any adjacent land or areas, resulting from the performance of the Work.

B. Should any claim be made by any such owner or occupant because of the performance of the Work, CONTRACTOR shall promptly settle with such other party by negotiation or otherwise resolve the claim by arbitration or other dispute resolution proceeding or at law. In case of a failure on the part of the CONTRACTOR to restore such property or to make good such damage or injuries, the CITY may, upon forty-eight (48) hours written notice to the CONTRACTOR, repair, rebuild or otherwise restore such property as the CITY may deem necessary, and the cost thereof will be deducted from any moneys due or which may become due the CONTRACTOR under this Contract.

C. CONTRACTOR shall, to the fullest extent permitted by Laws or Regulations, defend, indemnify and hold harmless CITY, DESIGN PROFESSIONAL, Consultants and the officers, directors, employees, agents and other consultants of each and any of them from and against all claims, costs, losses and damages (including but not limited to all fees and charges of engineers, architects, attorneys, and other professionals and all court or arbitration or other dispute resolution costs) arising out of or resulting from any claim or action, legal or equitable, brought by any such owner or occupant against CITY, DESIGN PROFESSIONAL or any other party indemnified hereunder to the extent caused by or based upon CONTRACTOR's performance of the Work.

D. During the progress of the Work, CONTRACTOR shall keep the Site and the other areas free from accumulations of waste materials, rubbish and other debris resulting from the Work. At the completion of the Work CONTRACTOR shall remove all waste materials, rubbish and debris from Site and other areas as well as all tools, appliances, construction equipment and machinery and surplus materials. CONTRACTOR shall leave the Site clean and ready for utilization or occupancy by CITY at Substantial Completion of the Work. CONTRACTOR shall restore to all property not designated for alteration by the Contract Documents to its pre-Work condition.

E. CONTRACTOR shall not load nor permit any part of any structure to be loaded in any manner that will endanger the structure, nor shall CONTRACTOR subject any part of the Work or adjacent property to stresses or pressures that will endanger it.

6.13 Record Documents

A. CONTRACTOR shall maintain in a safe place at the Site one record copy of all Drawings, Specifications, Addenda, the Contract, Written Amendments, Change Orders, Work

Change Directives, and written interpretations and clarifications in good order and annotated to show all changes made during construction. These record documents, together with all approved Samples and a counterpart of all approved Shop Drawings, will be available to CITY and DESIGN PROFESSIONAL for reference. Upon completion of the Work, these record documents, Samples and Shop Drawings will be delivered to DESIGN PROFESSIONAL for CITY.

6.14 Safety and Protection

A. CONTRACTOR shall be solely responsible for initiating, maintaining and supervising all safety precautions and programs in connection with the Work. CONTRACTOR shall comply with all applicable Laws or Regulations relating to the safety of persons or property to protect them from damage, injury or loss; and shall erect and maintain all necessary safeguards for safety and protection. CONTRACTOR shall deliver to CITY a copy of CONTRACTOR'S Health and Safety Plan as provided in the Notice of Intent to Contract.

B. CONTRACTOR shall notify owners of adjacent property and of Underground Facilities and other utility owners when prosecution of the Work may affect them, and shall cooperate with them in the protection, removal, relocation and replacement of their property. All damage, injury or loss to any property referred to in Paragraph 6.14 B.2 or 6.14 B.3 caused, directly or indirectly, in whole or in part, by CONTRACTOR, any Subcontractor, Supplier or any other person or organization directly or indirectly employed by any of them to perform or furnish any of the Work or anyone for whose acts any of them may be liable, shall be remedied by CONTRACTOR (except damage or loss attributable to the fault of Drawings or Specifications or to the acts or omissions of CITY, DESIGN PROFESSIONAL, Consultant, or anyone employed by any of them or anyone for whose acts any of them may be liable, and not attributable, directly or indirectly, in whole or in part, to the fault or negligence of CONTRACTOR, Subcontractor, Supplier or other person or organization directly or indirectly employed by any of them). CONTRACTOR's duties and responsibilities for safety and for protection of the Work shall continue until such time as all the Work is completed and DESIGN PROFESSIONAL has issued a notice to CONTRACTOR in accordance with Paragraph 14.07 that the Work is acceptable (except as otherwise expressly provided in connection with Substantial Completion). CONTRACTOR shall take all necessary precautions for the safety of, and shall provide the necessary protection to prevent damage, injury or loss to:

1. all persons on the Site or who may be affected by the Work;

2. all the Work and materials and equipment to be incorporated therein, whether in storage on or off the Site; and

3. other property at the Site or adjacent thereto, including trees, shrubs, lawns, walks, pavements, roadways, structures, utilities and Underground Facilities not designated for removal, relocation or replacement in the course of the Work.

6.15 Safety Representative

A. In accordance with OSHA standards, CONTRACTOR shall designate a qualified and experienced safety representative whose duties and responsibilities shall be the prevention of accidents and the maintaining and supervising of safety precautions and programs. CONTRACTOR's safety representative shall remain at the Site whenever there is Work in progress and shall immediately notify CITY of any emergencies or accidents occurring at the Site

6.16 Hazard Communication Programs

A. CONTRACTOR shall be responsible for coordinating any exchange of material safety data sheets or other hazard communication information required to be made available to or exchanged between or among employers at the Site in accordance with Laws or Regulations.

6.17 Emergencies

A. In emergencies affecting the safety or protection of persons or the Work or property at the Site or adjacent thereto, CONTRACTOR, without special instruction or authorization from CITY or DESIGN PROFESSIONAL, is obligated to act to prevent threatened damage, injury or loss. CONTRACTOR shall give CITY and DESIGN PROFESSIONAL prompt written notice if CONTRACTOR believes that any significant changes in the Work or variations from the Contract Documents have been caused thereby or are required as a result thereof. If CITY determines that a change in the Contract Documents is required because of the action taken by CONTRACTOR in response to an emergency, a Work Change Directive or Change Order will be issued.

B. A change in the Contract Documents pursuant to Paragraph 6.15 A will not be an automatic authorization of, nor a condition precedent to, entitlement to adjustment in the Contract Price or Contract Times. If CITY and CONTRACTOR are unable to agree on entitlement to, or magnitude of, an equitable adjustment in the Contract Price or Contract Times, a Claim may be made therefore as provided in Article 16. However, OWNER, DESIGN PROFESSIONAL and Consultants shall not be liable to CONTRACTOR for any costs, losses or damages (including but not limited to all fees and charges of engineers, architects, attorneys, and other professionals and all other dispute resolution costs) sustained by CONTRACTOR on or in connection with any other project or anticipated project.

6.18 Shop Drawings and Samples

A. CONTRACTOR shall submit Shop Drawings to DESIGN PROFESSIONAL for review and approval in accordance with the accepted schedule of Shop Drawings and Sample submittals (see Paragraph 2.07). All submittals shall be identified as DESIGN PROFESSIONAL may require and in the number of copies specified in the General Requirements. The data shown on the Shop Drawings shall be complete with respect to quantities, dimensions, specified performance and design criteria, materials and similar data to show DESIGN PROFESSIONAL the services, materials and equipment CONTRACTOR proposes to provide and to enable DESIGN PROFESSIONAL to review the information for the limited purposes required by Paragraph 6.18 D.

B. CONTRACTOR shall also submit Samples to DESIGN PROFESSIONAL for review and approval in accordance with said accepted schedule of Shop Drawings and Sample submittals. Each Sample shall be identified clearly as to material, Supplier, pertinent data such as catalog numbers and the use for which intended and otherwise as DESIGN PROFESSIONAL may require to enable DESIGN PROFESSIONAL to review the submittal for the limited purposes required by Paragraph 6.18 D. The numbers of each Sample to be submitted will be as specified in the Specifications.

C. **Submittal Procedures**:

1. Before submitting each Shop Drawing or Sample, CONTRACTOR shall have determined and verified:

a. all field measurements, quantities, dimensions, specified performance criteria, installation requirements, materials, catalog numbers and similar information with respect thereto;

b. all materials with respect to intended use, fabrication, shipping, handling, storage, assembly and installation pertaining to the performance of the Work;

c. all information relative to means, methods, techniques, sequences and procedures of construction and safety precautions and programs incident thereto; and

d. CONTRACTOR shall also have reviewed and coordinated each Shop Drawing or Sample with other Shop Drawings and Samples and with the requirements of the Work and the Contract Documents.

2. Each submittal shall bear a stamp or specific written indication that CONTRACTOR has satisfied CONTRACTOR's obligations under the Contract Documents with respect to CONTRACTOR's review and approval of that submittal.

3. At the time of each submission, CONTRACTOR shall give DESIGN PROFESSIONAL specific written notice of such variations, if any, that the Shop Drawing or Sample submitted may have from the requirements of the Contract Documents, the notice to be in a written communication separate from the submittal, and, in addition, shall cause a specific notation to be made on each Shop Drawing and Sample submitted to DESIGN PROFESSIONAL for review and approval of each such variation.

D. **DESIGN PROFESSIONAL's Review**:

1. DESIGN PROFESSIONAL will review and approve Shop Drawings and Samples in accordance with the schedule of Shop Drawings and Sample submittals accepted by DESIGN PROFESSIONAL as required by Paragraph 2.06. DESIGN PROFESSIONAL's review and approval will be only to determine if the items covered by the submittals will, after installation or incorporation into the Work, conform to the information given in the Contract Documents and be compatible with the design concept of the completed Project as a functioning whole as indicated by the Contract Documents.

2. DESIGN PROFESSIONAL's review and approval will not extend to means, methods, techniques, sequences or procedures of construction (except where a particular means, method, technique, sequence or procedure of construction is specifically and expressly called for by the Contract Documents) or to safety precautions or programs incident thereto. The review and approval of a separate item as such will not indicate approval of the assembly in which the item functions.

3. DESIGN PROFESSIONAL's review and approval of Shop Drawings or Samples shall not relieve CONTRACTOR from responsibility for any variation from the requirements of the Contract Documents unless CONTRACTOR has in writing called DESIGN PROFESSIONAL's attention to each such variation at the time of submission as required by Paragraph 6.18 C.3, and DESIGN PROFESSIONAL has given written approval of each such variation by specific written notation thereof incorporated into or accompanying the Shop Drawing or Sample approval; nor will any approval by DESIGN PROFESSIONAL relieve CONTRACTOR from responsibility for complying with the requirements of Paragraph 6.18 C.1.

E. Where a Shop Drawing or Sample is required by the Contract Documents or the schedule of Shop Drawings and Sample submissions accepted by DESIGN PROFESSIONAL as required by Paragraph 2.06, any related Work performed prior to DESIGN PROFESSIONAL's review and approval of the pertinent submittal will be at the sole expense and responsibility of CONTRACTOR.

F. CONTRACTOR shall make corrections required by DESIGN PROFESSIONAL and shall return the required number of corrected copies of Shop Drawings and submit as required new Samples for review and approval. CONTRACTOR shall direct specific attention in writing to revisions other than the corrections called for by DESIGN PROFESSIONAL on previous submittals.

6.19 Continuing the Work

A. CONTRACTOR shall carry on the Work and adhere to the progress schedule during all disputes or disagreements with CITY No Work shall be delayed or postponed pending resolution of any disputes or disagreements, except as permitted by Paragraph 15.04 or as CITY and CONTRACTOR may otherwise agree in writing.

6.20 CONTRACTOR's General Warranty and Guarantee

A. CONTRACTOR warrants and guarantees to CITY, DESIGN PROFESSIONAL and Consultants that all Work will be in accordance with the Contract Documents and will not be

defective. CONTRACTOR's warranty and guarantee hereunder excludes defects or damage caused by:

1. abuse, modification or improper maintenance or operation by persons other than CONTRACTOR, Subcontractors, Suppliers or any other individual or entity for whom CONTRACTOR is responsible; or

2. normal wear and tear under normal usage.

B. CONTRACTOR's obligation to perform and complete the Work in accordance with the Contract Documents shall be absolute. None of the following will constitute an acceptance of Work that is not in accordance with the Contract Documents or a release of CONTRACTOR's obligation to perform the Work in accordance with the Contract Documents:

1. observations by DESIGN PROFESSIONAL;

2. recommendation of any progress or final payment by DESIGN PROFESSIONAL;

3. the issuance of a certificate of Substantial Completion or any payment related thereto by CITY to CONTRACTOR;

4. use or occupancy of the Work or any part thereof by OWNER;

5. any review and approval of a Shop Drawing or Sample submittal or the issuance of a notice of acceptability by DESIGN PROFESSIONAL;

6. any inspection, test or approval by others; or

7. any correction of defective Work by CITY.

C. Nonconforming Work is rejected unless expressly accepted in writing by the CITY's Representative.

ARTICLE 7 OTHER WORK

7.01 Related Work at Site

A. CITY may perform other work related to the Project at the Site by CITY's own forces, or let other direct contracts therefore, or have other work performed by utility owners. If such other work is to be performed and such fact was not noted in the Contract Documents, then:

1. Written notice thereof will be given to CONTRACTOR prior to starting any such other work, and

2. CONTRACTOR may make a Claim therefore as provided in Article 16 if CONTRACTOR believes that such performance involves additional expense to CONTRACTOR or requires additional time and the parties are unable to agree as to the amount or extent thereof.

B. CONTRACTOR shall afford each other contractor who is a party to such a direct contract, and each utility owner (and CITY, if CITY is performing the additional work with CITY's employees) proper and safe access to the Site and a reasonable opportunity for the introduction and storage of materials and equipment and the execution of such other work and shall properly connect and coordinate the Work with theirs. Unless otherwise provided in the Contract Documents, CONTRACTOR shall do all cutting, fitting and patching of the Work that may be required to properly connect or otherwise make its several parts come together and properly integrate with such other work. CONTRACTOR shall not endanger any work of others by cutting, excavating or otherwise altering their work and will only cut or alter their work with the written consent of CITY and the others whose work will be affected. The duties and responsibilities of CONTRACTOR under this Paragraph are for the benefit of such utility owners and other contractors to the extent that there are comparable provisions for the benefit of CONTRACTOR in said direct contracts between CITY and such utility owners and other contractors.

C. If the proper execution or results of any part of CONTRACTOR's Work depends upon work performed by others under this Article 7, CONTRACTOR shall inspect such other work and promptly report to CITY and DESIGN PROFESSIONAL in writing any delays, defects or deficiencies in such other work that render it unavailable or unsuitable for the proper execution or results of CONTRACTOR's Work. CONTRACTOR's failure to report same will constitute an acceptance of such other work as fit and proper for integration with CONTRACTOR's Work, except for latent or non-apparent defects and deficiencies in such other work.

7.02 Coordination

A. If CITY contracts with others for the performance of other work on the Project at the Site, the following will be set forth in Supplementary Conditions:

1. the person, firm or corporation who will have authority and responsibility for coordination of the activities among the various prime contractors will be identified;
2. the specific matters to be covered by such authority and responsibility will be itemized; and
3. the extent of such authority and responsibilities will be provided.

B. Unless otherwise provided in the Supplementary Conditions, CITY shall have sole authority and responsibility in respect of such coordination.

ARTICLE 8 CITY'S RESPONSIBILITIES

8.01 Communications to CONTRACTOR

A. Except as otherwise provided in these General Conditions, CITY shall issue all communications to CONTRACTOR.

8.02 Replacement of DESIGN PROFESSIONAL

A. In case of termination of the employment of DESIGN PROFESSIONAL, CITY shall appoint a DESIGN PROFESSIONAL whose status under the Contract Documents shall be that of the former DESIGN PROFESSIONAL.

8.03 Furnish Data and Prompt Payment

A. CITY shall promptly furnish the data required of OWNER under the Contract Documents and shall make payments to CONTRACTOR when they are due.

8.04 Lands and Easements; Reports and Tests

A. CITY's duties in respect of providing lands and easements and providing engineering surveys to establish reference points are set forth in Paragraphs 4.01 and 4.05. Paragraph 4.02 refers to CITY's duty to identify and make available to CONTRACTOR copies of reports of explorations and tests of subsurface conditions at the Site and drawings of physical conditions in existing structures at or contiguous to the Site that have been utilized by DESIGN PROFESSIONAL in preparing the Contract Documents.

8.05 Insurance

A. CITY's responsibilities, if any, for purchasing and maintaining liability and property insurance are set forth in Article 5 and the Supplementary Conditions.

8.06 Change Orders

A. CITY is obligated to execute Change Orders as indicated in Paragraph 10.03.

8.07 Inspections, Tests and Approvals

A. CITY's responsibility for certain inspections, tests and approvals is set forth in Paragraph 13.02 F.

8.08 Limitations on CITY's Responsibilities

A. The CITY shall not supervise, direct or have control or authority over, nor be responsible for, CONTRACTOR's means, methods, techniques, sequences or procedures of construction, or the safety precautions and programs incident thereto, or for any failure of CONTRACTOR to comply with Laws or Regulations applicable to the furnishing or performance of the Work. CITY will not be responsible for CONTRACTOR's failure to perform or furnish the Work in accordance with the Contract Documents.

8.09 Undisclosed Hazardous Environmental Condition

A. CITY's responsibility for an undisclosed Hazardous Environmental Condition uncovered or revealed at the Site is set forth in Paragraph 4.06.

8.10 Evidence of Financial Arrangements

A. CITY will furnish CONTRACTOR reasonable evidence that financial arrangements have been made to satisfy OWNER's obligations under the Contract.

8.11 CITY's Representative

A. CITY will provide a representative during the construction period. The duties, responsibilities and the limitations of authority of the CITY '"s Representative during construction are set forth in the Contract Documents.

8.12 Visits to Site

A. CITY's Representative will make visits to the Site at intervals appropriate to the various stages of construction as CITY's Representative deems necessary in order to observe the progress that has been made and the quality of the various aspects of CONTRACTOR's executed Work. Based on information obtained during such visits and observations, CITY's Representative will endeavor to determine, in general, if the Work is proceeding in accordance with the Contract Documents. CITY's Representative will not be required to make exhaustive or continuous on-Site inspections to check the quality or quantity of the Work.

ARTICLE 9 DESIGN PROFESSIONAL's STATUS DURING CONSTRUCTION

9.01 General Scope of DESIGN PROFESSIONAL's Duties

A. DESIGN PROFESSIONAL's efforts will be directed toward providing for CITY a greater degree of confidence that the completed Work will conform generally to the Contract Documents. On the basis of visits to the Site and on-Site observations, DESIGN PROFESSIONAL will keep CITY informed of the progress of the Work and will endeavor to guard CITY against defective Work. DESIGN PROFESSIONAL's visits to the Site and on-Site observations are subject to all the limitations on DESIGN PROFESSIONAL's authority and responsibility set forth in Paragraph 9.08.

9.02 Resident Project Representative

A. If CITY and DESIGN PROFESSIONAL agree, DESIGN PROFESSIONAL will furnish a resident Project representative to assist DESIGN PROFESSIONAL in providing more extensive observation of the Work. The responsibilities, authority and limitations thereon of any such resident Project representative and assistants will be as provided in Paragraph 9.08 and in the Supplementary Conditions.

9.03 Clarifications and Interpretations

A. DESIGN PROFESSIONAL will issue with reasonable promptness written clarifications or interpretations (which may be in the form of Drawings) of the requirements of the Drawings and Specifications prepared by the DESIGN PROFESSIONAL as DESIGN PROFESSIONAL may determine necessary, which shall be consistent with the intent of and reasonably inferable from the Contract Documents. Such written clarifications and interpretations will be binding on CITY and CONTRACTOR. If CITY or CONTRACTOR believes that a written clarification or

interpretation justifies an adjustment in the Contract Price pursuant to Article 11 and/ or the Contract Times pursuant to Article 12 and the parties are unable to agree to the amount or extent thereof, if any, a Claim may be made therefore as provided in Article 16.

9.04 Rejecting Defective Work

A. DESIGN PROFESSIONAL will have authority to disapprove or reject Work which DESIGN PROFESSIONAL believes to be defective, that DESIGN PROFESSIONAL believes will not produce a completed Project that conforms to the Contract Documents, or that will prejudice the integrity of the design concept of the completed Project as a functioning whole as indicated by the Contract Documents. DESIGN PROFESSIONAL will also have authority to require special inspection or testing of the Work as provided in Paragraph 13.04 B, whether or not the Work is fabricated, installed or completed.

9.05 Shop Drawings, Change Orders and Payments

A. In connection with DESIGN PROFESSIONAL's authority as to Shop Drawings and Samples, see Paragraph 6.18.

B. In connection with DESIGN PROFESSIONAL's authority as to Change Orders, see Article 10.

C. In connection with DESIGN PROFESSIONAL's authority as to Applications for Payment, see Article 14.

9.06 Determinations for Unit Prices

A. DESIGN PROFESSIONAL will initially determine the actual quantities and classifications of Unit Price Work performed by CONTRACTOR. DESIGN PROFESSIONAL will review with CONTRACTOR the DESIGN PROFESSIONAL's preliminary determinations on such matters before rendering a written opinion thereon (by recommendation of an Application for Payment or otherwise to the CITY). CITY reserves the right to make a final determination of the actual quantities and classifications of Unit Price Work in reviewing an Application for Payment. Within ten (10) days after the date of receipt of any such decision, CONTRACTOR may deliver to CITY and to DESIGN PROFESSIONAL written notice of intention to appeal CITY's decision pursuant to Article 16.

9.07 Decisions on Requirements of Contract Documents and Acceptability of Work

A. DESIGN PROFESSIONAL will be the initial interpreter of the requirements of the Drawings and Specifications prepared by DESIGN PROFESSIONAL and judge of the acceptability of the Work thereunder.

B. When functioning as interpreter and judge under this Paragraph 9.07, DESIGN PROFESSIONAL will not show partiality to OWNER or CONTRACTOR.

C. Claims, disputes and other matters relating to the acceptability of the Work, quantities and classifications of Unit Price Work, or the interpretation of the requirements of the Contract Documents pertaining to the performance and furnishing of the Work will be referred initially to CITY's Representative in writing with a request for a formal decision in accordance with Article 16.

9.08 Limitations on DESIGN PROFESSIONAL's Authority and Responsibilities

A. Neither DESIGN PROFESSIONAL's authority or responsibility under this Article 9 or under any other provision of the Contract Documents nor any decision made by DESIGN PROFESSIONAL in good faith either to exercise or not exercise such authority or responsibility or the undertaking, exercise or performance of any authority or responsibility by DESIGN PROFESSIONAL shall create, impose or give rise to any duty owed by DESIGN PROFESSIONAL to CONTRACTOR, any Subcontractor, any Supplier, any other person or organization, or to any surety for or employee or agent of any of them.

B. DESIGN PROFESSIONAL will not supervise, direct, control or have authority over or be responsible for CONTRACTOR's means, methods, techniques, sequences or procedures of construction, or the safety precautions and programs incident thereto, or for any failure of CONTRACTOR to comply with Laws or Regulations applicable to the furnishing or performance of the Work. DESIGN PROFESSIONAL will not be responsible for CONTRACTOR's failure to perform or furnish the Work in accordance with the Contract Documents.

C. DESIGN PROFESSIONAL will not be responsible for the acts or omissions of CONTRACTOR or of any Subcontractor, any Supplier, or of any other person or organization performing or furnishing any of the Work.

D. DESIGN PROFESSIONAL's review of the final Application for Payment and accompanying documentation, and all maintenance and operating instructions, schedules, guarantees, Bonds and certificates of inspection, tests and approvals and other documentation required to be delivered by Paragraph 14.07 will only be to determine generally that their content complies with the requirements of, and in the case of certificates of inspections, tests and approvals, that the results certified indicate compliance with, the Contract Documents.

E. The limitations upon authority and responsibility set forth in this Paragraph 9.08 shall also apply to DESIGN PROFESSIONAL's Consultants, resident Project representative and assistants as identified in the Supplementary Conditions.

ARTICLE 10 CHANGES IN THE WORK

10.01 Authorized Changes in the Work

A. Without invalidating the Contract and without notice to any surety, CITY may, at any time or from time to time, order additions, deletions or revisions in the Work. Such additions, deletions or revisions will be authorized by a Written Amendment, a Change Order, or a Work Change Directive. Upon receipt of any such document, CONTRACTOR shall promptly proceed with the Work involved that will be performed under the applicable conditions of the Contract Documents (except as otherwise specifically provided).

B. If CITY and CONTRACTOR are unable to agree on entitlement to, or on the amount or extent, if any, of an adjustment in the Contract Price pursuant to Article 11 or an adjustment of the Contract Times pursuant to Article 12 or both that should be allowed as a result of a Work Change Directive, a Claim may be made therefore as provided in Article 16.

10.02 Unauthorized Changes in the Work

A. CONTRACTOR shall not be entitled to an increase in the Contract Price or an extension of the Contract Times with respect to any work performed that is not required by the Contract Documents as amended, modified or supplemented as provided in Paragraph 3.04, except in the case of an emergency as provided in Paragraph 6.17 or in the case of uncovering Work as provided in Paragraph 13.04.

10.03 Signing of Change Orders

A. CITY and CONTRACTOR, and DESIGN PROFESSIONAL shall sign appropriate Change Orders covering:

1. changes in the Work which are:

   a. ordered by CITY pursuant to Paragraph 10.01 A; or

   b. required because of acceptance of defective Work under Paragraph 13.08 or correcting defective Work under Paragraph 13.09; or

   c. agreed to by the parties;

2. changes in the Contract Price or Contract Times or both which are agreed to by the parties, including any undisputed sum or amount of time for Work actually performed in accordance with a Work Change Directive; and

3. changes in the Contract Price or Contract Times or both which embody the substance of any written decision recommended by DESIGN PROFESSIONAL and approved by CITY pursuant to Paragraph 9.06, provided that, in lieu of signing any such Change Order, an appeal may be taken from any such decision in accordance with the provisions of the Contract Documents and applicable Laws or Regulations, but during any such appeal, CONTRACTOR shall carry on the Work and adhere to the progress schedule as provided in Paragraph 6.19.

10.04 Notification to Surety

A. If notice of any change affecting the general scope of the Work or the provisions of the Contract Documents (including, but not limited to, Contract Price or Contract Times or both) is required by the provisions of any Bond to be given to a surety, the giving of any such notice will be CONTRACTOR's responsibility, and the amount of each applicable Bond will be adjusted accordingly.

ARTICLE 11 CHANGE OF CONTRACT PRICE

11.01 Change of Contract Price

A. The Contract Price constitutes the total compensation (subject to authorized adjustments) payable to CONTRACTOR for performing the Work. All duties, responsibilities and obligations assigned to or undertaken by CONTRACTOR shall be at CONTRACTOR's expense without change in the Contract Price.

B. The Contract Price may only be changed by a Change Order. Any request for an adjustment in the Contract Price shall be based on written notice delivered within fourteen (14) calendar days after occurrence of the event giving rise to the request or within fourteen (14) calendar days after first recognition of the conditions giving rise to the request. Prior notice is not required for requests or claims relating to an emergency endangering life or property as described in Paragraph 6.16. Thereafter, the CONTRACTOR shall submit written documentation of its request, including appropriate supporting documentation, within ten (10) calendar days after giving notice, unless the CITY grants an extension based on good cause shown by the CONTRACTOR that such additional time is warranted.

C. The value of any Work covered by a Change Order or of any request for an adjustment in the Contract Price will be determined as follows:

1. where the Work involved is covered by Unit Prices contained in the Contract Documents, by application of such Unit Prices to the quantities of the items involved (subject to the provisions of Paragraph 11.04); or

2. where the Work involved is not covered by Unit Prices contained in the Contract Documents, by a mutually agreed lump sum; or

3. where the Work involved is not covered by Unit Prices contained in the Contract Documents and agreement to a lump sum is not reached under Paragraph 11.01 C.2, on the basis of the Cost of the Work (determined as provided in Paragraphs 11.02 A and B) plus a CONTRACTOR's fee for overhead and profit (determined as provided in Paragraph 11.01 D).

D. The CONTRACTOR's fee allowed to CONTRACTOR for overhead and profit shall be determined as follows:

1. a mutually acceptable fixed fee; or

2. if a fixed fee is not agreed upon, then a fee based on the following percentages of the various portions of the Cost of the Work:

a. for costs incurred under Paragraphs 11.02 A.1 and 11.02 A.2, the CONTRACTOR's fee shall be ten percent (10%);

b. for costs incurred under Paragraph 11.02 A.3, the CONTRACTOR's fee shall be five percent (5%);

c. where one or more tiers of subcontracts are on the basis of the Cost of the Work plus a fee and no fixed fee is agreed upon, the intent of Paragraphs 11.01 D.2 and 11.02 A.1 through A.3 is that the Subcontractor who actually performs or furnishes the Work, at whatever tier, will be a paid a fee of ten percent (10%) of the costs incurred by such Subcontractor under Paragraphs 11.02 A.1 and 11.02 A.2 and that any higher tier Subcontractor and CONTRACTOR will each be paid a fee of five percent (5%) of the amount paid to the next lower tier Subcontractor;

d. no fee shall be payable on the basis of costs itemized under Paragraphs 11.02 A.4, 11.02 A.5 and 11.02 B;

e. the amount of credit to be allowed by CONTRACTOR to CITY for any change which results in a net decrease in cost will be the amount of the actual net decrease in costs plus a deduction in CONTRACTOR's fee by an amount equal to five percent (5%) of such net decrease; and

f. when both additions and credits are involved in any one change, the adjustment in CONTRACTOR's fee shall be computed on the basis of the net change in accordance with Paragraphs 11.01 D.2.a through 11.01 D.2.e, inclusive.

E. Whenever the Cost of the Work is to be determined pursuant to Paragraphs 11.02 A and B, CONTRACTOR shall establish and maintain records thereof in accordance with generally accepted accounting practices and submit in form acceptable to CITY an itemized cost breakdown together with supporting data.

11.02 Cost of the Work

A. The term "Cost of the Work" means the sum of all costs necessarily incurred and paid by CONTRACTOR in the proper performance of the Work. When the value of any Work covered by a Change Order or when a request for an adjustment in Contract Price is determined on the basis of Cost of the Work, the costs to be reimbursed to CONTRACTOR will be only those additional or incremental costs required because of the change in the Work or because of the event giving rise to the request. Except as otherwise agreed to in writing by CITY, costs covered by Change Orders or requests shall be in amounts no higher than those prevailing in the locality of the Project, shall include only the following items and shall not include any costs itemized in 11.02 B:

1. Payroll costs for employees in the direct employ of CONTRACTOR in the performance of the Work, using occupational titles and job classifications agreed upon by CITY and CONTRACTOR. Such employees shall include, without limitation, job Site superintendents, foremen and other personnel employed full time at the Site. Payroll costs for employees not employed full time on the Work shall be apportioned on the basis of their time spent on the Work. Payroll costs shall include, but not be limited to, salaries and wages plus the cost of fringe benefits which shall include social security contributions, unemployment, excise and payroll taxes, workers'" compensation, health and retirement benefits, bonuses, sick leave, vacation and holiday pay applicable thereto. The expenses of performing the Work after regular working hours, on Saturdays, Sundays or legal holidays, shall be included in the above to the extent authorized by OWNER.

2. Cost of all materials and equipment furnished and incorporated into the Work, including costs of transportation and storage thereof, and Suppliers' field services required in connection therewith. All cash discounts shall accrue to CONTRACTOR unless CITY deposits funds with CONTRACTOR with which to make payments, in which case the cash discounts shall accrue to CITY. All trade discounts, rebates and refunds and returns from sale of surplus materials and equipment shall accrue to CITY, and CONTRACTOR shall make provisions so that they may be obtained.

3. Payments made by CONTRACTOR to Subcontractors for Work performed or furnished by Subcontractors. If required by CITY, CONTRACTOR shall obtain competitive bids from Subcontractors acceptable to OWNER and CONTRACTOR and shall deliver such bids to CITY who will then determine, with the advice of DESIGN PROFESSIONAL, which bids, if any, will be accepted. If any subcontract provides that the Subcontractor is to be paid on the basis of the Cost of the Work plus a fee, the Subcontractor's Cost of the Work and fee shall be determined in the same manner as CONTRACTOR's Cost of the Work and fee as provided in Paragraphs 11.01 D and E and 11.02 A and B. All subcontracts shall be subject to the other provisions of the Contract Documents insofar as applicable.

4. Costs of special consultants (including but not limited to engineers, architects, testing laboratories, surveyors, attorneys and accountants) employed for services specifically related to the Work when such services are approved in advance by CITY in writing.

5. Other costs including the following:

a. The proportion of necessary transportation, travel and subsistence expenses of CONTRACTOR's employees incurred in discharge of duties connected with the Work.

b. Cost, including transportation and maintenance, of all materials, supplies, equipment, machinery, appliances, office and temporary facilities at the Site and hand tools not owned by the workers, which are consumed in the performance of the Work, and cost, less market value of such items used but not consumed which remain the property of CONTRACTOR.

c. Rentals of all construction equipment and machinery and the parts thereof whether rented from CONTRACTOR or others in accordance with rental agreements approved by CITY with the advice of DESIGN PROFESSIONAL, and the costs of transportation, loading, unloading, installation, assembly, dismantling and removal thereof, all in accordance with the terms of said rental agreements. The rental of any such equipment, machinery or parts shall cease when the use thereof is no longer necessary for the Work.

d. Applicable sales, consumer, use or similar taxes related to the Work**,** and for which CONTRACTOR is liable, imposed by Laws or Regulations.

e. Deposits lost for causes other than negligence of CONTRACTOR, any Subcontractor or anyone directly or indirectly employed by any of them or for whose acts any of them may be liable, and royalty payments and fees for permits and licenses required to perform the Work.

f. Losses and damages (and related expenses) caused by damage to the Work**,** not compensated by insurance or otherwise, sustained by CONTRACTOR in connection with the performance and furnishing of the Work (except losses and damages within the deductible amounts of property insurance established by CITY in accordance with Article 5), provided they have resulted from causes other than the negligence of CONTRACTOR, any Subcontractor, or anyone directly or indirectly employed by any of them or for whose acts any of them may be liable. Such losses shall include settlements made with the written consent and approval of CITY. No such losses, damages and expenses shall be included in the Cost of the Work for the purpose of determining CONTRACTOR's fee. If, however, any such loss or damage requires reconstruction and CONTRACTOR is placed in charge thereof, CONTRACTOR shall be paid for those services a fee proportionate to that stated in Paragraph 11.01 D.2.

g. The cost of utilities, fuel and sanitary facilities at the Site.

h. Minor expenses such as telegrams, long distance telephone calls, telephone service at the Site, expressage and similar petty cash items in connection with the Work.

i. Cost of premiums for additional or increased Bonds, or for insurance required because of approved changes in the Work.

B. Costs excluded: The term “Cost of the Work” shall not include any of the following:

1. Payroll costs and other compensation of CONTRACTOR’s officers, executives, principals (of partnership and sole proprietorships), general managers, engineers, architects, estimators, attorneys, auditors, accountants, purchasing and contracting agents, expediters, timekeepers, clerks and other personnel employed by CONTRACTOR whether at the Site or in CONTRACTOR’s principal or a branch office for general administration of the Work (if not specifically included in the agreed upon occupational titles and job classifications referred to in Paragraph 11.02 A.1 or specifically covered by Paragraph 11.02 A.4), all of which are to be considered administrative costs covered by the CONTRACTOR’s fee.

2. Expenses of CONTRACTOR’s principal and branch offices other than CONTRACTOR’s office at the Site.

3. Any part of CONTRACTOR’s capital expenses, including interest on CONTRACTOR’s capital employed for the Work and charges against CONTRACTOR for delinquent payments.

4. Costs due to the negligence of CONTRACTOR, any Subcontractor, or anyone directly or indirectly employed by any of them or for whose acts any of them may be liable, including but not limited to, the correction of defective Work, disposal of materials, or equipment wrongly supplied, and making good any damage to property.

5. Other overhead or general expense costs of any kind and the costs of any item not specifically and expressly included in Paragraph 11.02 A.

11.03 Cash Allowances

A. It is understood that CONTRACTOR has included in the Contract Price all allowances so named in the Contract Documents and shall cause the Work so covered to be furnished and performed for such sums as may be acceptable to CITY. CONTRACTOR agrees that:

1. the allowances include the cost to CONTRACTOR (less any applicable trade discounts) of materials and equipment required by the allowances to be delivered at the Site, and all applicable taxes; and

2. CONTRACTOR’s costs for unloading and handling on the Site, labor, installation costs, overhead, profit and other expenses contemplated for the allowances have been included in the Contract Price and not in the allowances, and no demand for additional payment on account of any of the foregoing will be valid.

B. Prior to final payment, an appropriate Change Order will be issued by CITY to reflect actual amounts due CONTRACTOR on account of Work covered by allowances, and the Contract Price shall be correspondingly adjusted.

11.04 Unit Price Work

A. Where the Contract Documents provide that all or part of the Work is to be Unit Price Work, initially the Contract Price will be deemed to include for all Unit Price Work an amount equal to the sum of the established unit price for each separately identified item of Unit Price Work times the estimated quantity of each item as indicated in the Contract. The estimated quantities of items of Unit Price Work are not guaranteed and are solely for the purpose of comparison of Bids and determining an initial Contract Price. Determinations of the actual quantities and classifications of Unit Price Work performed by CONTRACTOR will be made in accordance with Paragraph 9.06.

B. Each unit price will be deemed to include an amount considered by CONTRACTOR to be adequate to cover CONTRACTOR’s overhead and profit for each separately identified item.

C. CITY or CONTRACTOR may negotiate an adjustment of the price per unit of Unit Price Work stated in the Contract if:

1. the quantity of any item of Unit Price Work performed by CONTRACTOR differs by twenty percent (20%) or more from the estimated quantity of such item indicated in the Contract; and

2. there is no corresponding adjustment with respect to any other item of Work; and

3. CONTRACTOR believes that CONTRACTOR is entitled to an increase in Contract Price as a result of having incurred additional expense or CITY believes that CITY is entitled to a decrease in Contract Price.

11.05 Dispute Resolution

A. If CITY and CONTRACTOR are unable to agree on entitlement to, or magnitude of, an equitable adjustment in the Contract Price in accordance with Article 11 within fourteen (14) calendar days from the receipt of supporting documentation of the request pursuant to 11.01.B., unless the CITY grants an extension based on good cause shown by the CONTRACTOR that such additional time is warranted, then a Claim for such adjustment may be made pursuant to Article 16.

ARTICLE 12 CONTRACT TIMES

12.01 Time of the Essence

A. All times stated in the Contract Documents are of the essence of the Contract.

12.02 Change of Contract Times

A. The Contract Times (or Milestones) may only be changed by a Change Order. Any request for an adjustment in the Contract Times shall be based on written notice delivered within fourteen (14) calendar days after occurrence of the event giving rise to the request or within fourteen (14) calendar days after first recognition of the conditions giving rise to the request. Thereafter, the CONTRACTOR shall submit written documentation of its requests, including appropriate supporting documentation, within ten (10) days after giving notice, unless the CITY grants an extension based on good cause shown by the CONTRACTOR that such additional time is warranted.

12.03 Proof Required To Justify an Extension of Time For Excusable and Compensable Delays

A. In support of any request for an extension of the Contract Times pursuant to this Article, CONTRACTOR must demonstrate to the reasonable satisfaction of the CITY that the critical path of the approved baseline project schedule was delayed. CONTRACTOR shall be entitled to an increase in contract time for the number of days that the critical path was delayed solely as a result of the compensable or excusable event. A compensable or excusable event includes, but is not limited to:

1. unreasonable delay of issuance of Notice to Proceed by CITY;
2. CITY's unreasonable delay of delivery furnished materials, equipment, or work;
3. unreasonable delay responding to shop drawings and submittals;
4. CITY's unreasonable delay in issuing a Change Order;
5. an order by the CITY to stop the Work where the CONTRACTOR was not at fault; and
6. other reasonable grounds as determined by the City in its sole discretion.

B. CONTRACTOR shall compare the critical path of the approved baseline project schedule to the actual critical path of the Work, identifying the specific impact of the compensable or excusable event.

C. CONTRACTOR shall submit to the CITY a written time impact analysis illustrating the influence of each compensable or excusable event on the date of Substantial Completion. The

time impact analysis shall demonstrate the time impact based on the date of the delay in time and the event time computations or all affected activities.

D. If the critical path of the Work is delayed by "Force Majeure", the CONTRACTOR shall be entitled only to an extension of the Contract Times for the number of days of delay to the critical path. For purposes of this paragraph, "Force Majeure" shall mean fire, tornado, flood, earthquake, war, act of terrorism, civil disturbance, or labor strikes away from the project site.

E. Extensions of contract time pursuant to the this section will be granted only to the extent that the time adjustments exceed the total float time available when the event causing the delay occurred.

12.04 Delays Within CONTRACTOR's Control

A. The Contract Times (or Milestones) will not be extended due to delays within the control of CONTRACTOR. Delays attributable to and within the control of a Subcontractor or Supplier shall be deemed to be delays within the control of CONTRACTOR.

12.05 Delays Beyond the CITY's and CONTRACTOR's Control

A. Where CONTRACTOR is prevented from completing any part of the Work within the Contract Times (or Milestones) due to delay beyond the control of both CITY and CONTRACTOR, an extension of the Contract Times (or Milestones) in an amount equal to the time lost due to such delay shall be CONTRACTOR's sole and exclusive remedy for such delay.

12.06 Delay Damages

A. In no event shall CITY be liable to CONTRACTOR, any Subcontractor, any Supplier, any other person or organization, or to any surety for or employee or agent of any of them, for damages arising out of or resulting from:

1. delays caused by or within the control of CONTRACTOR, or

2. delays beyond the control of CITY or CONTRACTOR including but not limited to fires, floods, epidemics, abnormal weather conditions, acts of God or acts or neglect by utility owners or other contractors performing other work as contemplated by Article 7.

B. Nothing in this Paragraph 12.06 bars a change in Contract Price pursuant to this Article 12 to compensate CONTRACTOR due to delay, interference, or disruption directly attributable to actions or inaction of CITY, DESIGN PROFESSIONAL, Consultant or anyone for whom CITY, DESIGN PROFESSIONAL or Consultant is responsible.

12.07 Dispute Resolution

A. If CITY and CONTRACTOR are unable to agree on entitlement to, or magnitude of, an equitable adjustment in the Contract Time in accordance with Article 12 within fourteen (14) calendar days from the receipt of supporting documentation of the request pursuant to 12.02, unless the CITY grants an extension based on good cause shown by the CONTRACTOR that such additional time is warranted, then a Claim for such adjustment may be made pursuant to Article 16.

ARTICLE 13 TESTS AND INSPECTIONS; CORRECTION, REMOVAL OR ACCEPTANCE OF DEFECTIVE WORK

13.01 Access to Work

A. CITY, DESIGN PROFESSIONAL, Consultants, other representatives and personnel of CITY, independent testing laboratories and governmental agencies with jurisdictional interests will have access to the Site and Work at reasonable times for their observation, inspecting and testing. CONTRACTOR shall provide them proper and safe conditions for such access and advise them of CONTRACTOR's Site safety procedures and programs so that they may comply therewith as applicable.

13.02 Tests and Inspections

A. CONTRACTOR shall give DESIGN PROFESSIONAL and CITY's Representative timely notice of readiness of the Work for all required inspections, tests or approvals, and shall cooperate with inspection and testing personnel to facilitate required inspections or tests.

B. If any Work (or the work of others at the Site) that is to be inspected, tested or approved is covered by CONTRACTOR without written approval required by Paragraphs 13.02 D or 13.02 E, it must, if requested by CITY's Representative, be uncovered for observation.

C. Uncovering Work as provided in Paragraph 13.02 B, shall be at CONTRACTOR's expense unless CONTRACTOR has given DESIGN PROFESSIONAL and CITY's Representative timely notice of CONTRACTOR's intention to cover the same and DESIGN PROFESSIONAL and CITY's Representative have not acted with reasonable promptness in response to such notice.

D. If Laws or Regulations of any public body (including City) having jurisdiction require any Work (or part thereof) specifically to be inspected, tested or approved by an employee or other representative of such public body, CONTRACTOR shall assume full responsibility for arranging and obtaining such inspections, tests or approvals, pay all costs in connection therewith, and furnish DESIGN PROFESSIONAL and CITY's Representative the required certificates of inspection or approval.

E. CONTRACTOR shall be responsible for arranging and obtaining and shall pay all costs in connection with any inspections, tests or approvals required for CITY's and DESIGN PROFESSIONAL's acceptance of materials or equipment to be incorporated into the Work, or acceptance of materials, mix designs, or equipment submitted for approval prior to CONTRACTOR's purchase thereof for incorporation into the Work. Such inspections, tests, or approvals shall be performed by organizations acceptable to CITY and DESIGN PROFESSIONAL.

F. CITY shall employ and pay for the services of an independent testing laboratory to perform all inspections, tests, or approvals required by the Contract Documents except:

1. for inspections, tests or approvals covered by Paragraph 13.02 D and E;

2. that costs incurred in connection with tests or inspections conducted pursuant to Paragraph 13.04 B shall be paid as provided in said Paragraph 13.04 B; and

3. as otherwise specifically provided in the Contract Documents.

13.03 Notice of Defects

A. Prompt notice of all defective Work of which either CITY or DESIGN PROFESSIONAL has actual knowledge will be given to CONTRACTOR. Defective Work may be rejected, corrected or accepted as provided in this Article 13.

13.04 Uncovering Work

A. If any Work (or the work of others at the Site) is covered contrary to the written request of DESIGN PROFESSIONAL or CITY's Representative, it must, if requested by CITY's Representative, be uncovered for DESIGN PROFESSIONAL's or CITY's Representative's observation and replaced at CONTRACTOR's expense.

B. If CITY considers it necessary or advisable that covered Work be observed by DESIGN PROFESSIONAL or CITY's Representative or be inspected or tested by others, CONTRACTOR, at CITY's request, shall uncover, expose or otherwise make available for observation, inspection or testing as may be required, that portion of the Work in question, furnishing all necessary labor, material and equipment. If it is found that such Work is defective, CONTRACTOR shall pay all costs, losses and damages (including but not limited to all fees and charges of engineers, architects, attorneys, and other professionals and all court or arbitration or other dispute resolution costs) caused by, arising out of or resulting from such uncovering, exposure, observation, inspection and testing and of satisfactory replacement or reconstruction

(including but not limited to all costs of repair or replacement of work of others); and CITY shall be entitled to an appropriate decrease in the Contract Price. If the parties are unable to agree as to the amount thereof, CITY may make a Claim therefore as provided in Article 16. If, however, such Work is not found to be defective, CONTRACTOR shall be allowed an increase in the Contract Price or an extension of the Contract Times (or Milestones), or both, directly attributable to such uncovering, exposure, observation, inspection, testing, replacement and reconstruction. If the parties are unable to agree as to the amount or extent thereof, CONTRACTOR may make a Claim therefore as provided in Article 16.

13.05 CITY May Stop the Work

A. If the Work is defective, or CONTRACTOR fails to supply sufficient skilled workers or suitable materials or equipment, or fails to furnish or perform the Work in such a way that the completed Work will conform to the Contract Documents, CITY may order CONTRACTOR to stop the Work, or any portion thereof, until the cause for such order has been eliminated; however, this right of CITY to stop the Work shall not give rise to any duty on the part of CITY to exercise this right for the benefit of CONTRACTOR, any Subcontractor, Supplier, other individual or entity or any surety or employee or agent of any of them.

13.06 Correction or Removal of Defective Work

A. If required by CITY, CONTRACTOR shall promptly, as directed, either correct all defective Work, whether or not fabricated, installed or completed, or, if the Work has been rejected by either DESIGN PROFESSIONAL or CITY's Representative, remove it and replace it with Work that is not defective. CONTRACTOR shall pay all costs, losses and damages (including but not limited to all fees and charges of engineers, architects, attorneys, and other professionals and all court or arbitration or other dispute resolution costs) caused by or resulting from such correction or removal (including but not limited to all costs of repair or replacement of work of others).

13.07 Correction Period

A. If within one (1) year after the date of Substantial Completion, or such longer period of time as may be prescribed by Laws or Regulations, by the terms of any applicable special guarantee required by the Contract Documents, or by any specific provision of the Contract Documents, any Work is found to be defective, or if the repair of any damages to the land or areas made available for CONTRACTOR's use by CITY or permitted by Laws and Regulations as contemplated in Paragraph 6.10 is found to be defective, CONTRACTOR shall promptly, without cost to CITY and in accordance with CITY's written instructions:

1. correct the repair of damages to such land or areas; or

2. correct such defective Work, or if it has been rejected by CITY, remove it from the Site and replace it with Work that is not defective; and

3. satisfactorily correct or remove and replace any damage to other Work or to the work of others or damage to other lands or areas resulting therefrom. If CONTRACTOR does not promptly comply with the terms of such instructions, or in the event of an emergency where delay by CONTRACTOR would cause serious risk of loss or damage, CITY may have the defective Work corrected or the rejected Work removed and replaced, and all costs, losses and damages (including but not limited to all fees and charges of engineers, architects, attorneys, and other professionals and all court or arbitration or other dispute resolution costs) caused by or resulting from such removal and replacement (including but not limited to all costs of repair or replacement of work of others) will be paid by CONTRACTOR.

B. In special circumstances where a particular item of equipment is placed in continuous service before Substantial Completion of all the Work, the correction period for that item may start to run from an earlier date if so provided in the Specifications or by Written Amendment.

C. Where defective Work (and damage to other Work resulting therefrom) has been corrected or removed and replaced under this Paragraph 13.07, the correction period hereunder

with respect to such Work will be extended for an additional period of one (1) year, or such longer period of time as may be prescribed within Paragraph 13.07 A, after such correction or removal and replacement has been satisfactorily completed.

D. CONTRACTOR's obligations under this Paragraph 13.07 are in addition to any other obligation or warranty. The provisions of this Paragraph 13.07 shall not be construed as a substitute for or waiver of the provisions of any applicable statute of limitation or repose.

13.08 Acceptance of Defective Work

A. If, instead of requiring correction or removal and replacement of defective Work, CITY prefers to accept it, CITY may do so. CONTRACTOR shall pay all costs, losses and damages (including but not limited to all fees and charges of engineers, architects, attorneys, and other professionals and all court or arbitration or other dispute resolution costs) attributable to CITY's evaluation of and determination to accept such defective Work and shall pay OWNER for the diminished value of the Work. If any such acceptance occurs prior to DESIGN PROFESSIONAL's recommendation of final payment, a Change Order will be issued incorporating the necessary revisions into the Contract Documents with respect to the Work and, due to the diminished value of the Work, CITY shall be entitled to an appropriate decrease in the Contract Price. If the parties are unable to agree as to the amount thereof, CITY may make a Claim therefore as provided in Article 16. If the acceptance of defective Work occurs after such recommendation, an appropriate amount shall be paid by CONTRACTOR to CITY.

13.09 CITY May Correct Defective Work

A. If CONTRACTOR fails within a reasonable time after written notice from DESIGN PROFESSIONAL or CITY's Representative to correct defective Work or to remove and replace rejected Work as required by CITY in accordance with Paragraph 13.06, or if CONTRACTOR fails to perform the Work in accordance with the Contract Documents, or if CONTRACTOR fails to comply with any other provision of the Contract Documents, CITY may, after seven (7) days written notice to CONTRACTOR, correct and remedy any such deficiency.

B. CITY shall proceed expeditiously when exercising the rights and remedies under this Paragraph 13.09. In connection with such corrective and remedial action, CITY may exclude CONTRACTOR from all or part of the Site; take possession of all or part of the Work and suspend CONTRACTOR's services related thereto; take possession of CONTRACTOR's tools, appliances, construction equipment and machinery at the Site; and incorporate into the Work all materials and equipment stored at the Site or for which CITY has paid CONTRACTOR but which are stored elsewhere. CONTRACTOR shall allow CITY, CITY's Representative, agents and employees, CITY's other contractors, DESIGN PROFESSIONAL and Consultants access to the Site to enable CITY to exercise the rights and remedies under this Paragraph 13.09.

C. All costs, losses and damages (including but not limited to all fees and charges of engineers, architects, attorneys, and other professionals and all court or arbitration or other dispute resolution costs) incurred or sustained by CITY in exercising such rights and remedies will be charged against CONTRACTOR and a Change Order will be issued incorporating the necessary revisions into the Contract Documents with respect to the Work; and CITY shall be entitled to an appropriate decrease in the Contract Price. If CITY and CONTRACTOR are unable to agree as to the amount thereof, CITY may make a Claim therefore as provided in Article 16. Such Claims for costs, losses and damages will include but not be limited to all costs of repair or replacement of work of others destroyed or damaged by correction, removal and replacement of CONTRACTOR's defective or rejected Work.

D. CONTRACTOR shall not be allowed an extension of the Contract Times (or Milestones) because of any delay in the performance of the Work attributable to the exercise by CITY of CITY's rights and remedies under Paragraphs 13.06 and 13.09.

ARTICLE 14 PAYMENTS TO CONTRACTOR AND COMPLETION

14.01 Schedule of Values

A. 01290.02 Schedule of Values established as provided in Article 2 will serve as the basis for progress payments and will be incorporated into form 01290.01 Application for Payment acceptable to DESIGN PROFESSIONAL and CITY. Progress payments for Unit Price Work will be based on the number of units completed.

14.02 Application for Progress Payments

A. Application for Payment

1. At least twenty (20) days before the date stipulated in the Supplementary Conditions for each progress payment (but not more often than once a month), CONTRACTOR shall submit to DESIGN PROFESSIONAL for review an Application for Payment filled out and signed by CONTRACTOR covering the Work completed as of the date of the Application and accompanied by such supporting documentation as is required by the Contract Documents. If payment is requested on the basis of materials and equipment not incorporated into the Work but delivered and suitably stored at the Site or at another location agreed to in writing, the Application for Payment shall also be accompanied by a bill of sale, paid invoice or other documentation warranting that CITY has received the materials and equipment free and clear of all Liens and evidence that the materials and equipment are covered by appropriate property insurance and other arrangements to protect CITY'''s interest therein, all of which will be subject to CITY's approval.

2. Beginning with the second Application for Payment, each Application shall include:

a. an affidavit of CONTRACTOR stating that all previous progress payments received for the Work have been applied to discharge CONTRACTOR's legitimate obligations associated with prior Applications for Payment, and

b. a copy of the most recent 00485.01 M/WBE Monthly Utilization Report CONTRACTOR has submitted to the CITY's Civil Rights and Equal Opportunity Department.

c. a copy of the most recent 00485.02 Project Workforce Monthly Report and 00485.03 Company-Wide Workforce Monthly Report CONTRACTOR has submitted to the OWNER's Civil Rights and Equal Opportunity Department.

d. an update to the approved schedule pursuant to paragraphs 6.04 and 6.05.

3. The amount of retainage with respect to progress payments will be stated in the Supplementary Conditions.

B. Review of Applications

1. DESIGN PROFESSIONAL will, within ten (10) days after receipt of each Application for Payment, either indicate in writing a recommendation of payment and present the Application to CITY, or return the Application to CONTRACTOR indicating in writing DESIGN PROFESSIONAL's reasons for refusing to recommend payment. In the latter case, CONTRACTOR shall make the necessary corrections and resubmit the Application.

a. After presentation of the Application for Payment to CITY, and if CITY's Representative agrees with DESIGN PROFESSIONAL's recommendation, the amount recommended will (subject to the provisions of Paragraph 14.02 B.4) become due and will be paid by CITY to CONTRACTOR, subject to the provisions of Laws or Regulations.

b. No payment shall be approved until the CONTRACTOR has submitted with the Application accompanying documentation as required by the Contract Documents, including, but not limited to, the documentation required by paragraphs 6.04 and 6.05.

2. DESIGN PROFESSIONAL's recommendation of any payment requested in an Application for Payment will constitute a representation by DESIGN PROFESSIONAL to CITY, based on DESIGN PROFESSIONAL's observations of the executed Work as an experienced and qualified DESIGN PROFESSIONAL and on DESIGN PROFESSIONAL's

review of the Application for Payment and the accompanying data and schedules, that to the best of DESIGN PROFESSIONAL's knowledge, information and belief:

a. the Work has progressed to the point indicated;

b. the quality of the Work is generally in accordance with the Contract Documents (subject to an evaluation of the Work as a functioning whole prior to or upon Substantial Completion, to the results of any subsequent tests called for in the Contract Documents, to a final determination of quantities and classifications for Unit Price Work under Paragraph 9.06, and to any other qualifications stated in the recommendation); and

c. the conditions precedent to CONTRACTOR being entitled to such payment appear to have been fulfilled in so far as it is DESIGN PROFESSIONAL's responsibility to observe the Work.

3. DESIGN PROFESSIONAL's recommendation of any payment, including final payment, shall not mean that DESIGN PROFESSIONAL is responsible for CONTRACTOR's means, methods, techniques, sequence or procedures of construction, safety precautions and programs incident thereto, or any failure of CONTRACTOR to comply with Laws or Regulations applicable to the furnishing or performance of Work.

4. DESIGN PROFESSIONAL may refuse to recommend the whole or any part of any payment if, in DESIGN PROFESSIONAL's opinion, it would be incorrect to make the representations to CITY referred to in Paragraph 14.02 B.2. DESIGN PROFESSIONAL may also refuse to recommend any such payment or, because of subsequently discovered evidence or the results of subsequent inspections or tests, nullify any such payment previously recommended, to such extent as may be necessary in DESIGN PROFESSIONAL's opinion to protect CITY from loss because:

a. the Work is defective, or completed Work has been damaged requiring correction or replacement;

b. the Contract Price has been reduced by Written Amendment or Change Orders;

c. CITY has been required to correct defective Work or complete Work in accordance with Paragraph 13.09; or

d. DESIGN PROFESSIONAL has actual knowledge of the occurrence of any of the events enumerated in Paragraph 15.02.

C. Reduction in Payment

1. CITY may refuse to make payment of the full amount recommended by DESIGN PROFESSIONAL because:

a. Claims have been made by third parties against CITY on account of CONTRACTOR's performance or furnishing of the Work; or

b. Claims have been made by CITY against CONTRACTOR in connection with the Work, except where CONTRACTOR has delivered a specific Bond satisfactory to CITY to secure the satisfaction and discharge of such Claims;

c. there are other items entitling CITY to a set-off against the amount recommended; or

d. CITY has actual knowledge of the occurrence of any of the events enumerated in Paragraphs 14.02 B.4.a through c or 15.02 A.1 through 4; but CITY must give CONTRACTOR written notice (with a copy to DESIGN PROFESSIONAL) stating the reasons for such action and promptly pay CONTRACTOR the amount so withheld, or any adjustment thereto agreed to by CITY and CONTRACTOR, when CONTRACTOR corrects to CITY's satisfaction the reasons for such action; or

e. CITY has made a different determination of the actual quantities and classifications of Unit Price Work.

14.03 CONTRACTOR's Warranty of Title

A. CONTRACTOR warrants and guarantees that title to all Work, materials and equipment covered by any Application for Payment, whether incorporated into the Project or not, will pass to CITY no later than the time of payment, free and clear of all Liens.

14.04 Substantial Completion

A. When CONTRACTOR considers the entire Work ready for its intended use CONTRACTOR shall notify CITY and DESIGN PROFESSIONAL in writing that the entire Work is substantially complete (except for items specifically listed by CONTRACTOR as incomplete) and request that CITY issue a certificate of Substantial Completion. Within a reasonable time thereafter, CITY, together with CONTRACTOR and DESIGN PROFESSIONAL, shall make an inspection of the Work to determine the status of completion. If DESIGN PROFESSIONAL does not consider the Work substantially complete, DESIGN PROFESSIONAL will notify CONTRACTOR and CITY in writing giving the reasons therefore. If DESIGN PROFESSIONAL considers the Work substantially complete, DESIGN PROFESSIONAL will prepare and deliver to CITY a recommended certificate of Substantial Completion that shall establish the date of Substantial Completion. There shall be attached to the certificate a tentative list of items to be completed or corrected before final payment. CITY shall have seven (7) days after receipt of the recommended certificate during which to make written objection to DESIGN PROFESSIONAL as to any provisions of the certificate or attached list. At the time of delivery of the recommended certificate of Substantial Completion, DESIGN PROFESSIONAL will deliver to CITY and CONTRACTOR a written recommendation as to division of responsibilities pending final payment between CITY and CONTRACTOR with respect to security, operation, safety, protection of the Work, maintenance, heat, utilities, insurance and warranties and guarantees.

B. CITY shall have the right to exclude CONTRACTOR from the Site after the date of Substantial Completion, but CITY shall allow CONTRACTOR reasonable access to complete or correct items on the tentative list.

14.05 Partial Utilization

A. Use by CITY at CITY's option of any substantially completed part of the Work which has specifically been identified in the Contract Documents, or which CITY, DESIGN PROFESSIONAL and CONTRACTOR agree constitutes a separately functioning and usable part of the Work that can be used by CITY for its intended purpose without significant interference with CONTRACTOR's performance of the remainder of the Work, may be accomplished prior to Substantial Completion of all the Work subject to the following:

1. CITY at any time may request CONTRACTOR in writing to permit CITY to use any such part of the Work which CITY believes to be ready for its intended use and substantially complete. If CONTRACTOR agrees that such part of the Work is substantially complete, CONTRACTOR will certify to CITY and DESIGN PROFESSIONAL that such part of the Work is substantially complete and request CITY to issue a certificate of Substantial Completion for that part of the Work. CONTRACTOR at any time may notify CITY and DESIGN PROFESSIONAL in writing that CONTRACTOR considers any such part of the Work ready for its intended use and substantially complete and request CITY to issue a certificate of Substantial Completion for that part of the Work. Within a reasonable time after either such request, CITY, together with CONTRACTOR and DESIGN PROFESSIONAL, shall make an inspection of that part of the Work to determine its status of completion. If DESIGN PROFESSIONAL does not consider that part of the Work to be substantially complete, DESIGN PROFESSIONAL will notify CITY and CONTRACTOR in writing, giving the reasons therefore. If DESIGN PROFESSIONAL considers that part of the Work to be substantially complete, the provisions of Paragraph 14.04 will apply with respect to certification of Substantial Completion of that part of the Work and the division of responsibility in respect thereof and access thereto.

2. No occupancy or separate operation of part of the Work will be accomplished prior to compliance with the requirements of Paragraph 5.09 with respect to property insurance.

14.06 Final Inspection

A. Upon written notice from CONTRACTOR that the entire Work or an agreed portion thereof is complete, DESIGN PROFESSIONAL will make a final inspection with CITY and CONTRACTOR and will notify CONTRACTOR in writing of all particulars in which this inspection reveals that the Work is incomplete or defective. CONTRACTOR shall immediately take such measures as are necessary to complete such Work or remedy such deficiencies.

14.07 Final Payment

A. Application for Payment

1. After CONTRACTOR has completed all corrections required by Paragraph 14.06 to the satisfaction of DESIGN PROFESSIONAL and CITY's Representative and delivered in accordance with the Contract Documents all maintenance and operating instructions, schedules, guarantees, Bonds, certificates or other evidence of insurance required by Paragraph 5.04, certificates of inspection, marked-up record documents (as provided in Paragraph 6.13) and other documents, CONTRACTOR may make application for final payment following the procedure for progress payments.

2. The final Application for Payment shall be accompanied (except as previously delivered) by:

a. all documentation required by the Contract Documents, including but not limited to the evidence of insurance required by Subparagraph 5.04 B.7; and

b. 01290.14 "Contractor Affidavit for Final Payment" from CONTRACTOR and 01290.15 "Subcontractor Affidavit for Final Payment" from all Subcontractors, regardless of tier.

B. Review of Application and Acceptance

1. If, on the basis of DESIGN PROFESSIONAL's and CITY's Representative's observation of the Work during construction and final inspection, and DESIGN PROFESSIONAL's and CITY's Representative's review of the final Application for Payment and accompanying documentation as required by the Contract Documents, DESIGN PROFESSIONAL and CITY's Representative are satisfied that the Work has been completed and CONTRACTOR's other obligations under the Contract Documents have been fulfilled, DESIGN PROFESSIONAL will, within ten (10) days after receipt of the final Application for Payment, indicate in writing DESIGN PROFESSIONAL's and CITY's Representative's recommendation of payment and present the Application to CITY for payment. At the same time DESIGN PROFESSIONAL will also give written notice to CITY and CONTRACTOR that the Work is acceptable subject to the provisions of Paragraph 14.09.

2. Otherwise, DESIGN PROFESSIONAL will return the Application to CONTRACTOR, indicating in writing the reasons for refusing to recommend final payment, in which case CONTRACTOR shall make the necessary corrections and resubmit the Application to DESIGN PROFESSIONAL. After the presentation to CITY of the Application and accompanying documentation, in appropriate form and substance, including applicable federal and state prevailing wage provisions, and with DESIGN PROFESSIONAL's recommendation and notice of acceptability, the amount recommended by DESIGN PROFESSIONAL will become due and will be paid by CITY to CONTRACTOR in accordance with Laws and Regulations.

14.08 Final Completion Delayed

A. If, through no fault of CONTRACTOR, final completion of the Work is significantly delayed and if DESIGN PROFESSIONAL so recommends and CITY concurs, CITY shall, upon

receipt of CONTRACTOR's final Application for Payment and recommendation of DESIGN PROFESSIONAL, and without terminating the Contract, make payment of the balance due for that portion of the Work fully completed and accepted. If the remaining balance to be held by CITY for Work not fully completed or corrected is less than the retainage stipulated in the Supplementary Conditions, and if Bonds have been furnished as required in Paragraph 5.01, the written consent of the surety to the payment of the balance due for that portion of the Work fully completed and accepted shall be submitted by CONTRACTOR to DESIGN PROFESSIONAL with the Application for Payment. Payment shall be made under the terms and conditions governing final payment, except that it shall not constitute a waiver of Claims.

14.09 Waiver of Claims

A. The making and acceptance of final payment will constitute:

1. a waiver of all claims by CITY against CONTRACTOR, except claims previously made in writing and still unsettled, or claims arising from defective Work appearing after final inspection pursuant to Paragraph 14.06, from failure to comply with the Contract Documents or the terms of any special guarantees specified therein, or from CONTRACTOR's continuing obligations under the Contract Documents; and

2. a waiver of all Claims by CONTRACTOR against CITY other than those previously made in writing pursuant to Paragraphs 16.02 and 16.03 and still unsettled.

14.10 Completion of Work by CITY

A. If CITY must complete the Work, all costs and charges incurred by CITY, together with the cost of completing the Work under the Contract, will be deducted from any monies due or which may become due CONTRACTOR. If such expense exceeds the sum which would have been payable under the Contract, then CONTRACTOR and the surety shall be liable and shall pay to CITY the amount of such excess.

ARTICLE 15 SUSPENSION OF WORK AND TERMINATION

15.01 CITY May Suspend Work

A. Notwithstanding any other provision of this Contract, at any time and without cause, and at is sole and absolute discretion, CITY, may suspend the Work or any portion of the Work by written notice to CONTRACTOR, which will initially fix the date on which Work will be resumed. CONTRACTOR shall resume the Work on the date so fixed in the notice unless the date is changed by a subsequent written notice from CITY. CONTRACTOR may be allowed an adjustment in the Contract Price or an extension of the Contract Times, or both, directly attributable to any suspension if CONTRACTOR makes a Claim therefore in accordance with Article 16.

B. CONTRACTOR will not be allowed an adjustment in the Contract Price or an extension of the Contract Times if CITY suspends the Work because CONTRACTOR's acts or omissions create or cause an emergency that CITY believes affects the safety or protection of persons, the Work, or property at the Site or adjacent thereto. CITY may order CONTRACTOR to stop the Work, or any portion thereof, until the cause for such order has been adequately addressed by CONTRACTOR; however, this right of CITY to stop the Work shall not give rise to any duty on the part of CITY to exercise this right for the benefit of CONTRACTOR, any Subcontractor, Supplier, other individual or entity or any surety or employee or agent of any of them.

15.02 CITY May Terminate for Default

A. CONTRACTOR may be deemed in default and CITY may terminate the services of CONTRACTOR upon the occurrence of any one or more of the following events:

1. CONTRACTOR fails to perform the Work in accordance with the Contract Documents (including, but not limited to, failure to supply sufficient skilled workers or suitable materials or equipment or failure to adhere to the progress schedule established under Paragraph 2.06 and 2.07 as adjusted from time to time pursuant to Paragraphs 6.04, 6.05, 12.02 and 12.03);

2. CONTRACTOR abandons the Work or declares its intention to abandon the Work;

3. CONTRACTOR assigns or attempts to assign its rights or obligations under this Contract or any part thereof to any third party without the prior written consent of CITY;

4. CONTRACTOR fails to make prompt payment duly owing to any subcontractor for Work completed in accordance to the Contract Documents or material supplier for materials delivered for incorporation into the Work within thirty (30) calendar days after payment was due;

5. CONTRACTOR fails to achieve the required dates of substantial and final completion;

6. CONTRACTOR disregards Laws or Regulations of any public body having jurisdiction;

7. CONTRACTOR disregards the authority of DESIGN PROFESSIONAL or OWNER; or

8. CONTRACTOR otherwise violates in any substantial way any provisions of the Contract Documents.

B. CITY may, after giving CONTRACTOR (and the surety) seven (7) days written notice and to the extent permitted by Laws or Regulations, terminate the services of CONTRACTOR, exclude CONTRACTOR from the Site and take possession of the Work and of all CONTRACTOR's tools, appliances, construction equipment and machinery at the Site and use the same to the full extent they could be used by CONTRACTOR (without liability to CONTRACTOR for trespass or conversion), incorporate into the Work all materials and equipment stored at the Site or for which CITY has paid CONTRACTOR but which are stored elsewhere, and finish the Work as CITY may deem expedient. In such case, CONTRACTOR shall not be entitled to receive any further payment until the Work is finished. If the unpaid balance of the Contract Price exceeds all costs, losses and damages (including but not limited to all fees and charges of engineers, architects, attorneys, and other professionals and all court or arbitration or other dispute resolution costs) sustained by CITY arising out of or resulting from completing the Work, such excess may be paid to CONTRACTOR. If such costs, losses and damages exceed such unpaid balance, CONTRACTOR shall pay the difference to CITY within fourteen (14) calendar days of CITY'S demand for payment. When exercising any rights or remedies under this Paragraph CITY shall not be required to competitively bid this work unless required by law.

C. Where CONTRACTOR's services have been so terminated by CITY, the termination will not affect any rights or remedies of CITY against CONTRACTOR then existing or which may thereafter accrue. Any retention or payment of moneys due CONTRACTOR by CITY will not release CONTRACTOR from liability.

D. If, after a default termination, it is determined that the CONTRACTOR was not in default, the rights and obligations of the parties shall be the same as if the termination had been issued for the convenience of the CITY. The CITY shall then be liable to CONTRACTOR for only those costs enumerated in paragraph 15.03.

15.03 CITY May Terminate for Convenience

A. Notwithstanding any other provision of this Contract, upon seven (7) calendar days written notice to CONTRACTOR, CITY may, at its sole and absolute discretion, without cause and without prejudice to any other right or remedy of CITY, elect to terminate the Contract. In such case, CONTRACTOR shall, with thirty (30) calendar days of receiving notice of termination under this paragraph, submit to CITY its statement of costs and expenses and shall be paid:

1. for completed and acceptable Work executed in accordance with the Contract Documents prior to the effective date of termination, including fair and reasonable sums for overhead and profit on such Work;

2. for expenses sustained prior to the effective date of termination in performing services and furnishing labor, materials or equipment as required by the Contract Documents in connection with uncompleted Work, plus fair and reasonable sums for overhead and profit on such expenses;

3. for all costs, losses and damages incurred in settlement of terminated contracts with Subcontractors, Suppliers and others; and

4. for reasonable expenses directly attributable to termination if approved in advance by CITY.

B. CONTRACTOR shall not be paid on account of loss of anticipated profits or revenue or other economic loss arising out of or resulting from such termination.

C. CONTRACTOR waives any costs not submitted to CITY pursuant to paragraph 15.03.A.

D. CITY shall, within thirty (30) calendar days after receipt of CONTRACTOR's statement, pay CONTRACTOR all amounts it determines are properly determined.

ARTICLE 16 CLAIMS AND DISPUTES

16.01 Definition

A. A Claim is a demand or assertion by the CONTRACTOR seeking, as a matter of right, the adjustment of Contract price and/or times with respect to the terms of the Contract.

16.02 Written Notice and Burden of Proof

A. Claims must be made by written notice pursuant to Paragraph 17.01. The written notice shall clearly indicate that the CONTRACTOR is making a claim. The responsibility to substantiate Claims shall rest with the CONTRACTOR. No Claim may be made under this Contract except as provided in this Article.

B. Certification of Claim: The written notice of Claim shall include the following statement signed by the CONTRACTOR's representative: "The CONTRACTOR certifies that all statements made and the facts set out in this claim are true and correct and that no false records have been submitted in support of this claim." **Strict compliance with this paragraph shall be a condition precedent to the creation, existence or validity of any Claim**.

16.03 Time Limits on Claims

A. The CONTRACTOR must give notice to the CITY within fourteen (14) calendar days after the denial of a request for or failure to reach an agreement on a change in Contract Price and/or change in Contract Time pursuant to Article 11 and Article 12 respectively. After the fourteen (14) day period for making Claims has expired, the Claim shall be considered waived.

B. The CONTRACTOR shall submit the Claim to the CITY's Representative.

16.04 Continuing Contract Performance

A. Pending final resolution of a Claim, unless otherwise agreed in writing, the CONTRACTOR shall proceed diligently with performance of the Work and the CITY shall continue to make payments in accordance with the Contract Documents. The CITY may, but is not obligated to, notify the Surety of the nature and amount of the Claim.

16.05 Injury or Damage to Person or Property

A. If either party to the Contract suffers injury or damage to person or property because of an act or omission of the other party, of any of the other party's employees or agents, or of others for whose acts that party is legally liable, written notice of the injury or damage, whether or not insured, shall be given to the other party within a reasonable time not exceeding thirty (30) days after first observance. The notice shall provide sufficient detail to enable the other party to investigate the matter.

16.06 Initial Resolution of Claims and Disputes

A. After the CONTRACTOR has submitted the Claim to the CITY's Representative, the CITY'S Representative and CONTRACTOR'S Representative shall conduct a settlement conference within fourteen (14) calendar days from the date of receipt of the Claim. If the Claim is not settled within seven (7) calendar days following the date of the settlement conference, the CITY'S Representative and the CONTRACTOR's Representative shall state, in writing, following the conclusion of the seven (7) calendar day period, their respective position as to the matters in dispute.

B. The CITY'S and CONTRACTOR'S statement of positions shall state all known factual grounds for each party's position. If the dispute remains unresolved at the end of the seven (7) calendar days from submission of the parties' written position statements, the CONTRACTOR shall have the right to proceed with the pursuit of Claims pursuant to paragraph 16.07.

C. If a Claim has been resolved, the OWNER will prepare or obtain appropriate documentation.

16.07 Final Resolution of Claims and Disputes

A. All administrative procedures set forth in this contract must first be exhausted before suit is filed.

B. If the CITY'S Representative and the CONTRACTOR'S Representative are unable to resolve the dispute pursuant to 16.06, the parties must submit their statements of position to the Director, who shall review the Claim and make a decision within fourteen (14) calendar days.

C. Absent fraud, gross mistake or bad faith, the Director's decision shall be final and binding on CITY and CONTRACTOR within fourteen (14) calendar days after issuance. The CONTRACTOR shall give written notice to the CITY stating its intent to submit its Claim to a court of law pursuant to paragraph 17.05.A. within thirty (30) calendar days after notice of Director's decision.

D. The time frames for the Director's decision and for CONTRACTOR'S written notice of intent may be tolled by participation in voluntary mediation. Mediator selection and the procedures to be employed in voluntary mediation shall be mutually acceptable to the parties. Costs of the mediator shall be shared equally among the parties participating in the mediation. In no event shall any time frame be tolled more than 30 days for mediation. However, mediation may be employed at any time at the discretion and mutual agreement of the parties.

E. If the dispute is not resolved during voluntary mediation, The CONTRACTOR agrees that it will file no suit based on facts or evidentiary materials that were not presented for consideration to the CITY during the mediation process or of which the CONTRACTOR had knowledge and failed to present during the administrative procedures.

ARTICLE 17 MISCELLANEOUS

17.01 Giving Notice

A. Whenever any provision of the Contract Documents requires the giving of written notice, it will be given by personal delivery, by registered or certified mail, postage prepaid, to the last business address known to the giver of the notice or by confirmed electronic facsimile transmission. Notice is effective on the date of personal delivery, deposit of registered or certified mail, postage prepaid, or confirmed electronic facsimile transmission.

17.02 Computation of Times

A. When any period of time is referred to in the Contract Documents by days, it will be computed to exclude the first and include the last calendar day of such period. If the last day of such period falls on a Saturday or Sunday or on a day made a legal holiday by the law of the applicable jurisdiction, such day will be omitted from the computation.

17.03 Cumulative Remedies

A. The duties and obligations imposed by these General Conditions and the rights and remedies available hereunder to the parties hereto, and, in particular but without limitation, the

warranties, guarantees and obligations imposed upon CONTRACTOR and all of the rights and remedies available to CITY and DESIGN PROFESSIONAL hereunder are in addition to, and are not to be construed in any way as a limitation of, any rights and remedies available to any or all of them which are otherwise imposed or available by Laws or Regulations, by special warranty or guarantee or by other provisions of the Contract Documents, and the provisions of this Paragraph will be as effective as if repeated specifically in the Contract Documents in connection with each particular duty, obligation, right and remedy to which they apply.

17.04 Survival of Obligations

A. All representations, indemnifications, warranties, and guarantees made in, required by, or given in accordance with the Contract Documents, as well as all continuing obligations indicated in the Contract Documents will survive final payment, completion, and acceptance of the Work or termination or completion of the Contract.

17.05 Controlling Law

A. This Contract shall be construed and governed in accordance with the laws of the State of Missouri without giving effect to Missouri's choice of law provisions. The CITY and CONTRACTOR: (1) shall submit exclusively to the jurisdiction of the state and federal courts located in Jackson County, Missouri and no other; (2) shall waive any and all objections to jurisdiction and venue; and (3) shall not raise forum non conveniens as an objection to the location of any litigation.

CITY OF FOUNTAINS
HEART OF THE NATION

KANSAS CITY
MISSOURI

SUPPLEMENTARY CONDITIONS

Project/Contract Number 80002336/9663

Project Title Water Main Replacement in the Area of College Avenue to Norton Avenue from E 21st Street to E 31st Street

These Supplementary Conditions amend or supplement the General Conditions of the Construction Contract and other provisions of the Contract Documents as indicated below. All provisions that are not so amended or supplemented remain in full force and effect.

SC-1.01 Article 1, Paragraph 1.01 Defined Terms, is amended by adding the following new Subparagraph 1.01 A.55.

55. Water Services Department – Water Services Department of Kansas City, Missouri.

SC-2.03 A. Article 2, Paragraph 2.03, Copies of Documents, is amended by deleting Paragraph 2.03 A and replacing it with the following:

A. CITY shall furnish to CONTRACTOR up to one (1) copies of the Drawings and Specifications, including Addenda.

SC-4.02 Article 4, Paragraph 4.02, Subsurface and Physical Conditions; Subparagraphs A and B are supplemented as follows:

In the preparation of the Contract Documents, no reports of explorations and tests of subsurface conditions at or contiguous to the Site of the Work have been prepared.

In the preparation of the Contract Documents, no drawings of physical conditions in or relating to existing surface or subsurface structures which are at or contiguous to the Site of the Work are available.

SC-4.06 Article 4, Paragraph 4.06, Asbestos, Lead-Based Paint, PCBs, Petroleum Waste or Radioactive Material, Subparagraphs A and B are supplemented as follows:

In the preparation of the Contract Documents, no reports of explorations and tests of any Hazardous Environmental Condition(s) at the Site of the Work have been prepared.

SC- 5.01 A. Article 5, Paragraph 5.01, Performance, Payment and Other Bonds, Subparagraph A, second sentence, is revised as follows:

These Bonds shall remain in effect at least until three (3) years after the date when final payment becomes due, except as provided otherwise by Laws or Regulations or by the Contract Documents.

SC-5.03 A. Article 5, Paragraph 5.03 Certificates of Insurance, Subparagraph A is amended by adding the following Subparagraph 1:

1. CONTRACTOR shall obtain evidence that all Subcontractors have in force the required coverage in the amounts required by these Contract Documents, and evidence that each is current on its unemployment insurance payments before Subcontractors begin Work at the Site. CONTRACTOR shall retain such evidence in its files and make available to CITY within ten (10) days after written request.

SC-5.06 A. Article 5, Paragraph 5.06, Property Insurance, Paragraph A, is amended by adding the following after the first sentence:

Property Insurance on the Work at the Site shall be written with a deductible amount not to exceed $10,000.00.

SC-6.06 A.1 Article 6, Paragraph 6.06 Substitutes and "Or-Equal" Items, Paragraph A is amended by adding the following at the end of Paragraph A.1:

> Proposed "or-equal" items must be submitted to CITY at least ten (10) days prior to Bid date at the following address:
>
> Water Services Department
> 4800 E. 63rd Street
> Kansas City, Missouri 64130
> Attn: Davis McDonald-MacLin, Project Manager
>
> Only Bidders may submit proposed "or-equal" items and such items must require no change in related Work. Acceptance by CITY of any proposed "or-equal" items will be made by Addendum only.

SC-6.06 A.2. Article 6, Paragraph 6.06 Substitutes and "Or-Equal" Items, Paragraph A is amended by adding the following at the end of Paragraph A.2:

> Proposed substitute items must be submitted to CITY's Representative not later than ten (10) days prior to the time the item is to be incorporated into the Work. Only CONTRACTOR may submit proposed substitute items, and such items must be submitted to CITY's Representative on the standard City form 01630 - Substitution Request. Acceptance by CITY of any proposed substitute item will be made by Change Order.

SC-6.10. Article 6, Paragraph 6.10, Compliance with Laws and Regulations, is amended by adding the following new Subparagraphs immediately following Subparagraph 6.10 I 2:

a. CONTRACTOR will be required to comply with wage rates as follows:

County – **Jackson**

Work Type: State – Heavy

SC-6.07 J Article 6, Paragraph 6.07, concerning Subcontractors, Suppliers and Others, is supplemented by adding Subparagraph J as follows:

CONTRACTOR shall perform with its own organization Work amounting to not less than 51% of the total Contract Price. “Its own organization” shall be construed to include only workers employed and paid by the CONTRACTOR and equipment owned or rented by the CONTRACTOR, with or without operators. Such term does not include employees or equipment of a subcontractor, assignee, or agent of the CONTRACTOR.

SC-6.10. Article 6, Paragraph 6.10, Compliance with Laws and Regulations, is amended by adding the following new Subparagraph 6.10 S:

1. “Resident Laborers” means laborers who have been residents of the State of Missouri for at least thirty days and who intend to remain Missouri residents, and residents of Nonrestrictive States.

2. “Nonrestrictive States” means states identified by the Missouri Department of Labor and Industrial Relations Division of Labor Standards that have not enacted state laws restricting Missouri laborers from working on public works projects. A list of Nonrestrictive States can be found on the Division web site at http://www.dolir.mo.gov/ls/index.htm.

3. A period of Excessive Unemployment is declared when the Missouri Department of Labor and Industrial Relations Division of Labor Standards provides notice of such declaration. When in effect, notice will be provided on the Division web site at http://www.dolir.mo.gov/ls/index.htm. It is CONTRACTOR's obligation to determine whether a period of Excessive Unemployment is in effect when this Contract is let.

4. CONTRACTOR agrees to follow the provisions of Section 290.560 - 290.575 RSMo and agrees that if a period of Excessive Unemployment has been declared at any point during the term of this Contract, it will employ and require all Subcontractors of whatever tier to employ only Resident Laborers for the Work to be performed under this CONTRACT. Provided, however, CONTRACTOR may use laborers who are not Resident Laborers when Resident Laborers are not available or are incapable of performing the particular type of work involved if CONTRACTOR so certifies in writing to CITY and CITY issues a written approval. This provision does not apply to regularly employed nonresident executive, supervisory or technical employees.

SC-6.10. Article 6, Paragraph 6.10, Compliance with Laws and Regulations, is amended by adding the following new Subparagraph 6.10 T:

Contract Information Management System. CONTRACTOR shall comply with CITY's Contract Information Management System requirements. CONTRACTOR shall use CITY's Internet web based Contract Information Management System/Project Management Communications Tool provided by CITY and protocols included in that software during the term of this Contract. CONTRACTOR shall maintain user applications to CITY's provided system for all personnel, subcontractors or suppliers as applicable.

SC-6.11. Article 6, Paragraph 6.11, Taxes, is amended by adding the following sentence to Subparagraph 6.11 B:

B. Tax Compliance. The following subparagraphs apply if the Contract is over $160,000.00.

SC-12.01 Article 12, Paragraph 12.01, Time of the Essence is amended by adding the following new Subparagraphs immediately following Subparagraph 12.01 A:

B. Starting and Completion

1. The Work to be performed under this Contract shall begin on the date specified in the written Notice to Proceed issued by the Director of Water Services, and the Work shall be substantially complete, in accordance with Paragraph 14.04, within ***210 Calendar Days*** thereafter. Once the Work starts, CONTRACTOR shall continuously pursue completion of the Work.

2. The Work shall be completed and ready for final payment in accordance with Paragraph 14.07 within ***90 Calendar Days*** after the date of Substantial Completion of the Work.

C. Liquidated Damages

1. If the Work is not substantially completed, in accordance with Paragraph 14.04, within the period stated in Paragraph 12.01 B.1, CONTRACTOR shall pay to CITY the amount of *SIX HUNDRED DOLLARS* ($600) as liquidated damages and not as a penalty for each Calendar Day until the Work is substantially complete. The amount of liquidated damages shall be deducted from any payments due or to become due CONTRACTOR.

2. If the Work is not completed and ready for final payment in accordance with Paragraph 14.07, within the period stated in Paragraph 12.01 B.2, CONTRACTOR

shall pay to CITY the amount of *TWO HUNDRED DOLLARS* ($200) as liquidated damages and not as a penalty for each Calendar Day until the Work is completed and ready for final payment. The amount of liquidated damages shall be deducted from any payments due or to become due CONTRACTOR.

SC-13.07 Article 13, Paragraph 13.07, Correction Period, Subparagraph A is amended as follows:

The correction period set forth in Paragraph 13.07 A shall be three (3) years instead of one (1) year, which longer period of time shall also be applicable to the correction period set forth in Paragraph 13.07 C. All other provisions of Paragraph 13.07 remain unchanged except as necessary to accommodate the revised length of the correction period.

SC-14.02 A. Article 14, Paragraph 14.02, Application for Progress Payments, Subparagraph A is amended by deleting Item 3 and adding the following:

3. CITY shall make payments to CONTRACTOR monthly on or about the fifteenth (15) day of each month. Payments to CONTRACTOR will be made on the basis of ninety-five percent (95%) of the value of the Work satisfactorily completed plus ninety-five percent (95%) of the value of properly stored and insured, unused materials on hand on the Site of the Work. CITY shall retain five percent (5%) of each partial payment until completion and acceptance of the Work covered by the Contract and final payment is due. All Work covered by a payment becomes CITY's property, provided that the Work paid for remains the sole responsibility of CONTRACTOR until all terms and conditions of the Contract have been met.

SC-14.04. Article 14, Paragraph 14.04, Substantial Completion, Subparagraph A is supplemented as follows:

A. To be considered substantially complete, the following items of the Work must be operational and ready for CITY's continuous use as intended:
    1. Water distribution mains installed and successfully tested, disinfected, and connected to existing water distribution system.
    2. All service lines and appurtenances transferred.
    3. All permanent connections of new water mains to the existing water distribution system constructed, and all existing mains as specified abandoned with its existing valves and hydrants removed.
    4. Restoration of pavement surface construction and related repairs completed.
    5. All wastes and debris shall be removed from the site and properly disposed.
    6. All grading and surface restoration, including seeding and sodding, riprap, and road replacement work completed.
    7. All fencing, gates, and landscaping installed.
    8. All cleanup and miscellaneous repair Work completed.
    9. All Record Drawings and Record Document Submittals shall be submitted and accepted by the City.

The intent is for all restoration, repair, and cleanup work to be completed as the water main work progresses. The additional time to the specified Completion Date for all Work is to allow time if needed for determination of acceptance of seeding and sodding work and for completing any final seeding and sodding work and pavement replacement work that may not be able to be completed as a result of seasonal and weather limitations.

SC-14.05 Article 14, Paragraph 14.05, Partial Utilization is amended by adding the following new Subparagraph A.3. immediately following Subparagraph 14.05 A.2:

3. CITY at any time may make a written request to CONTRACTOR to permit CITY to take over operation of any part of the Work although it is not substantially complete. A copy of the request will be sent to DESIGN PROFESSIONAL, and within a reasonable time thereafter CITY, CONTRACTOR and DESIGN PROFESSIONAL shall make an inspection of that part of the Work to determine its status of completion and will prepare a list of the items remaining to be completed or corrected thereon before final payment. If CONTRACTOR does not make written objection to CITY and DESIGN PROFESSIONAL that such part of the Work is not ready for separate operation by CITY, DESIGN PROFESSIONAL will finalize the list of items to be completed or corrected and will deliver such lists to CITY and CONTRACTOR. DESIGN PROFESSIONAL will also make a written recommendation as to the division of responsibilities pending final payment between CITY and CONTRACTOR with respect to security, operation, safety, maintenance, utilities, insurance, warranties and guarantees for that part of the Work, which recommendation will become binding upon CITY and CONTRACTOR at the time when CITY takes over such operation (unless they shall have otherwise agreed in writing and so informed DESIGN PROFESSIONAL). During such operation and prior to Substantial Completion of such part of the Work, CITY shall allow CONTRACTOR reasonable access to complete or correct items on said list and to complete other related Work.

SECTION 00830

PREVAILING WAGE

1. Annual Wage Order No. 31
2. **0830.03 Division of Labor Standards Rules & Regulations** are incorporated into and made part of this Contract and are available at http://s1.sos.mo.gov/cmsimages/adrules/csr/current/8csr/8c30-3.pdf.

Missouri
Division of Labor Standards
WAGE AND HOUR SECTION

MICHAEL L. PARSON, Governor

Annual Wage Order No. 31

Section 048
JACKSON COUNTY

In accordance with Section 290.262 RSMo 2000, within thirty (30) days after a certified copy of this Annual Wage Order has been filed with the Secretary of State as indicated below, any person who may be affected by this Annual Wage Order may object by filing an objection in triplicate with the Labor and Industrial Relations Commission, P.O. Box 599, Jefferson City, MO 65102-0599. Such objections must set forth in writing the specific grounds of objection. Each objection shall certify that a copy has been furnished to the Division of Labor Standards, P.O. Box 449, Jefferson City, MO 65102-0449 pursuant to 8 CSR 20-5.010(1). A certified copy of the Annual Wage Order has been filed with the Secretary of State of Missouri.

Original Signed by
Todd Smith, Director
Division of Labor Standards

Filed With Secretary of State: **March 8, 2024**

Last Date Objections May Be Filed: **April 8, 2024**

Prepared by Missouri Department of Labor and Industrial Relations

OCCUPATIONAL TITLE	**Prevailing Hourly Rate
Asbestos Worker	$69.50
Boilermaker	$39.44*
Bricklayer-Stone Mason	$62.06
Carpenter	$64.94
Lather	
Linoleum Layer	
Millwright	
Pile Driver	
Cement Mason	$58.02
Plasterer	
Communication Technician	$62.38
Electrician (Inside Wireman)	$70.32
Electrician Outside Lineman	$61.40
Lineman Operator	
Lineman - Tree Trimmer	
Groundman	
Groundman - Tree Trimmer	
Elevator Constructor	$93.11
Glazier	$59.07
Ironworker	$70.66
Laborer	$52.42
General Laborer	
First Semi-Skilled	
Second Semi-Skilled	
Mason	$50.24
Marble Mason	
Marble Finisher	
Terrazzo Worker	
Terrazzo Finisher	
Tile Setter	
Tile Finisher	
Operating Engineer	$66.05
Group I	
Group II	
Group III	
Group III-A	
Group IV	
Group V	
Painter	$54.25
Plumber	$78.88
Pipe Fitter	
Roofer	$60.69
Sheet Metal Worker	$76.38
Sprinkler Fitter	$69.92
Truck Driver	$54.27
Truck Control Service Driver	
Group I	
Group II	
Group III	
Group IV	

*The Division of Labor Standards received fewer than 1,000 reportable hours for this occupational title. The public works contracting minimum wage is established for this occupational title using data provided by Missouri Economic Research and Information Center.
**The Prevailing Hourly Rate includes any applicable fringe benefit amounts for each occupational title as defined in RSMo Section 290.210.

OCCUPATIONAL TITLE	**Prevailing Hourly Rate
Carpenter	$65.11
Millwright	
Pile Driver	
Electrician (Outside Lineman)	$90.71
Lineman Operator	
Lineman - Tree Trimmer	
Groundman	
Groundman - Tree Trimmer	
Laborer	$51.85
General Laborer	
Skilled Laborer	
Operating Engineer	$60.48
Group I	
Group II	
Group III	
Group IV	
Truck Driver	$53.04
Truck Control Service Driver	
Group I	
Group II	
Group III	
Group IV	

Use Heavy Construction Rates on Highway and Heavy construction in accordance with the classifications of construction work established in 8 CSR 30-3.040(3).

Use Building Construction Rates on Building construction in accordance with the classifications of construction work established in 8 CSR 30-3.040(2).

If a worker is performing work on a heavy construction project within an occupational title that is not listed on the Heavy Construction Rate Sheet, use the rate for that occupational title as shown on the Building Construction Rate Sheet.

*The Division of Labor Standards received fewer than 1,000 reportable hours for this occupational title. Public works contracting minimum wage is established for this occupational title using data provided by Missouri Economic Research and Information Center.

**The Prevailing Hourly Rate includes any applicable fringe benefit amounts for each occupational title.

OVERTIME
and
HOLIDAYS

OVERTIME

For all work performed on a Sunday or a holiday, not less than twice (2x) the prevailing hourly rate of wages for work of a similar character in the locality in which the work is performed or the public works contracting minimum wage, whichever is applicable, shall be paid to all workers employed by or on behalf of any public body engaged in the construction of public works, exclusive of maintenance work.

For all overtime work performed, not less than one and one-half (1½) the prevailing hourly rate of wages for work of a similar character in the locality in which the work is performed or the public works contracting minimum wage, whichever is applicable, shall be paid to all workers employed by or on behalf of any public body engaged in the construction of public works, exclusive of maintenance work or contractual obligation. For purposes of this subdivision, **"overtime work"** shall include work that exceeds ten hours in one day and work in excess of forty hours in one calendar week; and

A thirty-minute lunch period on each calendar day shall be allowed for each worker on a public works project, provided that such time shall not be considered as time worked.

HOLIDAYS

January first;
The last Monday in May;
July fourth;
The first Monday in September;
November eleventh;
The fourth Thursday in November; and
December twenty-fifth;

If any holiday falls on a Sunday, the following Monday shall be considered a holiday.

CITY OF FOUNTAINS
HEART OF THE NATION

KANSAS CITY
MISSOURI

ADDENDUM NUMBER 001

Project/Contract Number 80002336/9663

Project Title Water Main Replacement in the Area of College Avenue to Norton Avenue, E 21st Street to E 31st Street

ISSUE DATE: **6.18.25**

Bidders are hereby notified that the Bidding and Contract Documents for the above project, for which Bids are to be received on **6.24.25**, are amended as follows:

Information to Bidders The following is provided to Bidders for information only:

1. Clarication provided regading Alternate A
   a. See SH09 through SH10
   b. See Section 00420 – Bid Alernates Form
   c. See Section 01015 – Specific Project Requirements

2. Clarification provided regarding pipe insulation
   a. See SH53 through SH54
   b. See Section 01015 – Specific Project Requirements

3. Clarifiction provided regarding paving
   a. See Section 01015 – Specific Project Requirements

4. Clarification provided regarding degredation fees
   a. See Public Works (PW) Permitting Group
   b. See Sec 64-118 of the Municipal Code

Q1.	*"Bid alternate A is from sheet 9 to 11 which is 954 lf but on page 9 it mentioned that it is between sta. 0+00 to 5+25. Can you please clarify?"*
A1.	**Alternate A is for the installation of Line A from Station 0+00 to 5+25 only.** **Installation of Line A from 5+25 to 7+00 as shown on Sheet 10 shall be included within the base bid.** **Section 00420 – Bid Alernates Form** **Background: the segment along Bales Ave. from 22nd St. to 23rd St. (approx.) is within private property and the City is diligently working on aquiring an easment in order to install the proposed water line in that area.**
Q2.	*"I see a call out on line K-2 for foam glas ridged foam but I'm not seeing any specifications on the product or details for installation. Can these be provided? "*
A2.	**See Addendum No. 1.**

Q&A Continued on next page

Q3.	*"I see shading in the plan/profile sheets for the full lane width but the project specific pavement restoration says we will use flush fill concrete. Please confirm that mill and overlay of the street will not be required."*
A3.	**See Section 01015 regarding modifications to Section 02250 and Section 02575.**
Q4.	*"I'm being told by KCMO field inspectors that the degradation fee calculation is being changed (or very recently has been changed) Can you please provide the most current language for degradation fee calculations?"*
A4.	**Reach out to the Permitting Group for Public Works and reference Sec 64-118 of the code of ordinances for more information regarding degradation fees.** **https://www.kcmo.gov/city-hall/departments/public-works/permit-applications** **https://library.municode.com/mo/kansas_city/codes/code_of_ordinances?nodeId=COORKAMIVOII_CH64STSIPUPL_ARTIVEX_S64-118EXPEFE**

Contracting Requirements

1. Delete and replace the following section(s):
    a. Delete 00005 – Construction Certification Page and replace with the following 00005 – Construction Certification Page
    b. Delete 01015 – Specific Project Requirements and replace with the following 01015 – Specific Project Requirements

Specifications

1. Add the following section(s):
    a. 02617 – Pipe Insulation

Drawings:

1. Delete and replace the following section(s):
    a. Delete SH53 of the Approved for Construction Drawings and replace with SH53 of the Approved for Construction Drawings
    b. Delete SH54 of the Approved for Construction Drawings and replace with SH54 of the Approved for Construction Drawings

NOTE: Bidders must acknowledge receipt of this Addendum by listing the number and date, where provided, on the Bid Form - Document 00410.

CITY OF FOUNTAINS
HEART OF THE NATION
KANSAS CITY
MISSOURI

CERTIFICATION PAGE

Project/Contract Number: 80002336 / 9663

Project Title: WMR in the area of College Ave to Norton Ave from E. 21st St to E. 31st St

---

I am responsible for the following specifications and drawings:

Drawings:
01 – 28, 32 – 66

Specifications:
02617 Pipe Insulation

STATE OF MISSOURI
MELANIE R. JOLLETT
NUMBER
PE-2019000282
PROFESSIONAL ENGINEER

6/13/2025 (SEAL)

I am responsible for the following specifications and drawings:

Drawings:
29 – 31

Specifications:
None

STATE OF MISSOURI
KEVIN D. McCURDY
5-27-2025
NUMBER
PE-2014016128
PROFESSIONAL ENGINEER

(SEAL)

I am responsible for the following specifications and drawings:

Drawings:
67 – 73

Specifications:
None

STATE OF MISSOURI
AMY LYNN McCURDY
NUMBER
PE-2010039281
PROFESSIONAL ENGINEER
6/27/25

(SEAL)

I am responsible for the following specifications and drawings

Drawings:
None

Specifications:
Divisions
1,2,3,5&6

STATE OF MISSOURI
DAVID POIRIER
NUMBER
PE–2005001030
PROFESSIONAL ENGINEER

Digitally signed by David Poirier
DN: C=US, E=david.poirier@kcmo.org, O=KC Water, OU=Engineering, CN=David Poirier
Date: 2025.06.17 16:46:43-05'00'

(SEAL)

I certify under penalty of law that the document and all attachments were prepared under my direction or supervision in accordance with a system designed to assure that qualified personnel properly gathered and evaluated the information submitted, and that the information submitted is, to the best of my knowledge and belief, true, accurate, and complete. I am aware that there are significant penalties for submitting false information, including the possibility of fine and imprisonment for knowing violations.

SECTION 01015 – SPECIFIC PROJECT REQUIREMENTS

PART 1 - GENERAL

1.01 SUMMARY

A. This section covers the modification of specifications for this Project. Any specification that is modified for this Project is listed in Part 3 of this Section by Division. If the Division or specification is not included in this Section, then the Project specification in the Division remains intact.

1.02 SPECIFICATION MODIFICATIONS

A. In the event Section 01015 – Specific Project Requirements conflicts with other project specifications of Divisions 01 through 06; the requirements of this Section shall govern.

1.03 RELATED SECTIONS

A. Section 01000 – General Project Requirements
B. Section 01020 – Record Documents
C. Section 01300 – Submittals
D. Section 01320 – Construction Progress Documentation
E. Section 01322 – Photographic Documentation
F. Section 01335 – Document Management
G. Section 01500 – Temporary Facilities
H. Section 01570 – Temporary Erosion Control
I. Section 01580 – Project Signs
J. Section 01581 – Public Communications
K. Section 01700 – Traffic Control
L. Section 02250 – Trenching, Pipe Embedment and Backfill
M. Section 02575 – Surface Restoration
N. Section 02675 – Flushing, Testing and Disinfection of Water Mains
O. Section 02617 – Pipe Insulation
P. Section 02618 – Ductile Iron Pipe for Water Mains
Q. Section 02930 – Seeding
R. Section 02931 – Sodding

1.04 QUALITY ASSURANCE

A. The Contractor is responsible for the quality assurance and quality control of the Work.

1.05 INFORMATION PROVIDED BY THE CITY

A. As provided in the Contract Documents.

1.06 DESCRIPTION OF PROJECT

A. The work to be performed under these Contract Documents shall be consistent with Section 00700 - General Conditions in the construction, installation, and completion of all work required in connection with the Water Main Replacement in the Area of College Avenue to Norton Avenue from E 21st Street to E 31st Street in Kansas City, Jackson County, Missouri.

B. The work to be performed under these Construction Contract Documents is generally described as follows:

The Project in general consists of replacing approximately 11,210 LF (Base Bid) of break-prone and obsolete water mains and appurtenances and providing other distribution system improvements within the project limits, generally defined as College Avenue to Norton Avenue from E 21st Street to E 31st Street. The specific mains to be replaced and other distribution system improvements within the project limits consist of the following:

1. Replace 429 LF of 12-inch CIP water main with 12-inch DIP along Bales Avenue from E 21st Street to E 22nd Street (Line A)
2. Replace 354 LF of 6-inch CIP water main with 12-inch DIP along E 21st Street from Indiana Avenue to Bales Avenue (Line B)
3. Replace 3,446 LF of 10-inch CIP water main with 12-inch DIP along Indiana Avenue from E 27th Street to east of E 21st Street (Line C)
4. Replace 436 LF of 6-inch CIP water main with 8-inch DIP along E 24th Street from Indiana Avenue to Bales Avenue (Line D)
5. Replace 633 LF of 6-inch CIP water main with 8-inch DIP along E 24th Terrace from Indiana Avenue to dead-end west of I-70 (Line E)
6. Replace 461 LF of 6-inch CIP water main with 8-inch DIP along E 25th Street from Indiana Avenue to Bales Avenue (Line F)
7. Replace 711 LF of 6-inch CIP water main with 8-inch DIP along E 26th Street from College Avenue to Bales Avenue (Line G)
8. Replace 79 LF of 6-inch CIP water main with 8-inch DIP along College Avenue at E 26th Street (Line H)
9. Replace 1,560 LF of 6-inch CIP water main with 8-inch DIP along Mersington Avenue from E 31st Street to E 28th Street (Line K)
10. Replace 2,013 LF of 4-inch CIP water main with 8-inch DIP along Myrtle Avenue from E 31st Street to west of E 28th Street (Line L)
11. Replace 1,088 LF of 6-inch CIP water main with 8-inch DIP along Norton Avenue from E 31st Street to E 29th Street (Line M)

Continued on next page.

Alternate A:

1. Replace 525 LF of 12-inch CIP water main with 12-inch DIP along Bales Avenue from E 22nd Street to E 23rd Street (approx.)

Base Bid – footage is approximately 11,210 LF
Alternate A – footage is approximately 525 LF
Total Footage is approximately 11,735 LF

1.07 CONTRACT DRAWINGS

A. The Drawings on which the Contract is to be based are entitled Water Main Replacement in the Area of College Avenue to Norton Avenue from E 21st Street to E 31st Street in Kansas City, Jackson County, Missouri. The Drawings are to be supplemented by additional shop and dimension drawings of materials and equipment and other drawings where specified. The following drawings are included in the Drawings:

Drawing No.(s)	Sheet Number	Title
D – 20909	1	COVER SHEET
D – 20909	2	GENERAL NOTES, PROJECT NOTES & LEGEND
D – 20909	3-4	CONTROL POINTS AND BENCHMARK SHEETS
D – 20909	5-6	GENERAL LAYOUT
D – 20909	7-8	STORM & SANITARY SEWER TABLES.
D – 20909	9-11	PLAN & PROFILES BID ALTERNATE -A
D – 20909	12-66	PLAN & PROFILES
D – 20909	67-73	TRAFFIC CONTROL SHEETS

1.08 MATERIALS FURNISHED BY THE CITY

A. The City will provide the following equipment or materials to be used for the Project. All materials required to complete the Work in accordance with the Contract Documents shall be furnished, installed, and paid for by the Contractor.

1. No equipment or materials will be provided by the City.

1.09 SEQUENCE OF WORK

A. Contractor shall proceed with the work in the following general sequence for each segment of work.

1. Where excavation is required, call 1-800-DIGRITE or 811 to confirm location of underground utilities in accordance with Missouri One Call System requirements.

2. Obtain all required permits to construct the work including but not limited to Public Works traffic control, excavation, pavement degradation, and excavation permits; Parks & Recreation permits for work in boulevards or parkways; and Missouri Department of Transportation (MoDOT) permits for work in MoDOT right of way.

3. Provide Initial Notification of Construction to property owners / residents along the segment of work as further specified herein.

4. Set up and maintain traffic control devices and signage as approved by Public Works for the segment of work.

5. If required by Section 01570 – Temporary Erosion Control, prepare and execute a Stormwater Pollution Protection Plan (SWPPP) and maintain copy on site. Implement best management practices (BMPs) and appropriate stabilization methods to control erosion and prevent stormwater runoff from disturbed areas.

6. Locate by vacuum excavation or other excavation methods existing underground utilities in the area of the work as necessary to avoid a conflict with the proposed work or damage to the utility.

7. Deliver materials to the site and store as further specified herein.

8. Excavate and install new water main and appurtenances as shown on the plans and as further specified herein while maintaining existing water mains in service.

9. Take measurements of the work installed and prepare field-marked drawings (red line markups) as the work progresses. Obtain survey points of the work as required for preparation of record drawings.

10. Prepare and submit to Water Services shut requests to construct temporary connections and provide required notices to customers of scheduled water shut offs.

11. Construct temporary connections to the new water mains from the existing distribution system and isolated by at least two valves. Fill and flush new water mains. Pressure test and disinfect new water mains and appurtenances as further specified herein.

12. Transfer water services from existing to the new water mains. Relocate water meters to exterior locations as shown on the plans. Remove existing meters from inside facilities.

13. Prepare and submit to Water Services a shut requests to construct permanent connections and provide required notices to customers of scheduled water shut offs.

14. Construct permanent connections as shown on the plans and abandon the existing water mains and appurtenances as further specified herein.

15. Restore street pavements, curb, sidewalks, driveways and all other disturbed areas. Maintain BMPs to control soil erosion and runoff until permanent stabilization is achieved.

1.10 LIMTATIONS ON SEQUENCE OF WORK

A. Water Main Construction must be sequenced as follows to reduce the amount of disruption to the Water Services' customers. Exceptions must be approved in writing by Water Services.

1. If the Contractor has only one crew working on the construction project, construction cannot commence on a second designated water main (i.e. Line A, Line B, Line C, etc.) on the construction plans until all work has been completed on the designated water main currently under construction, which includes laying pipe, performing the required testing on the water main and receiving satisfactory test results, transferring services in this designated water main segment, and cleaning up the area of all debris and excess materials and grading the disturbed soil such that the main area is ready for seed or sod. If seeding and sodding cannot be accomplished due to the time of year based on the contract documents, the Contractor must install and maintain erosion control and hydro-mulch until seeding or sodding can be established in disturbed areas.

2. If the Contractor has multiple crews working on the construction project, one crew may commence laying pipe on a second designed water main while the other crew is completing work on the first designated water main under construction. However, no additional work can occur on a subsequent designated water main until all work on the first designated water main under construction has been completed as described in Subparagraph A.1.above.

3. Contractor shall submit a work plan for any temporary service for replace-in-place method of construction if method specified in the Plans.

Review and approval of the work plan by the City is required prior to the commencement of pipe installation.

PART 2 – PRODUCTS

Not Used.

PART 3 – EXECUTION

3.01 DIVISION 1 – GENERAL REQUIREMENTS, SPECIFICATION MODIFICATIONS

A. Division 1 – General Requirements is modified as follows:

B. Section 01000 – General Project Requirements is modified as follows:

1. In accordance with paragraph SUBMITTALS, the Contractor is not required to provide a Construction Site Plan.

2. Add Paragraphs B, C, and D to Section 01000, Subsection 1.17 – CONFORMING TO CONSTRUCTION DRAWINGS as follows:

"B. In accordance with Section 01000, Subsection 1.17 - APPLICABLE CODES, the following Public Works Department standard specifications are incorporated into this set of Contract Documents by reference:

Design criteria and construction specification sections of the APWA as adopted by the Public Works Department and all supplements or replacement sheets with the exception that all paragraphs relating to Measurement and Payment, Method of Payment, and Basis of Payment do not apply to this Project:
APWA 2100 – Grading and Site Preparation
APWA 2200 – Paving
APWA 2300 - Incidental Construction

C. In accordance with Section 01000, Subsection 1.17 - APPLICABLE CODES, the following Public Works Department standard details are incorporated into this set of Contract Documents by reference:
C – Curbs
D-1 – Concrete Driveways
D-2 – Concrete Reconstruction Driveways
D-US – Driveways, Unimproved Streets
SR-1 Street Cut Restoration
SW-1 – Curb Ramp Template (17 pages)

D. In accordance with Section 01000, Subsection 1.17 - APPLICABLE CODES, the following Parks and Recreation Department standard details are incorporated into this set of Contract Documents by reference:

C – Curb
C1 – Concrete Curb and Gutter
CR – Rollback Curb & Gutter
CJ – Concrete Joint
SC – Commercial Sidewalk
ARB-ADA Curb Ramp Type B
DC – Commercial Driveway
DR - Residential Driveway"

3. Delete Paragraph 1.30 B. OPERATION OF EXISTING VALVES in Section 01000 and replace with the following Paragraph 1.30 B:

"1.30 B. If the Contractor needs water valves operated for either a test shut or a main shut, the Contractor shall prepare and submit a written shut request in proper form to Water Services at least seven (7) calendar days in advance of the proposed valve operation. A temporary test shut must be separately requested, scheduled, and conducted to ensure a tight shut for the main shut. Contractor shall assist with test shuts and main shuts as requested by City, including but not limited to, preparing and distributing shut notices and operation of valves under the direct supervision of the City. Contractor shall be responsible for providing notice of the temporary test shut and main shut to all affected customers/properties in accordance with the notification requirements outlined in Section 01581 – Public Communications. The Contractor must follow the City's standard procedures when filling and flushing distribution mains including but not limited to, notifying City's Dispatch Office."

4. Add Section 01000, Subsection 1.41 – CONNECTIONS TO EXISTING MAINS with Paragraphs A through F as follows:

"1.41 CONNECTIONS TO EXISTING MAINS

A. The Contractor shall furnish and install all fittings necessary for connections to the existing water mains at the locations shown on the Plans. No connections to existing mains shall be started without prior approval of the City. Scheduling of water main shuts and connections to existing water main shall be at the discretion of Water Services.

B. It shall be the responsibility of the Contractor to make any and all excavations and backfill as required, and furnish all labor, equipment, and material necessary to complete the connections as detailed on the Plans. The Contractor shall maintain, barricade, repair, restore, and protect all excavations and disturbed areas. All bends, tees, etc., shall be provided with adequate backing by the Contractor as required in Section 02669 – Thrust Restraints of the Standards and Specifications.

C. All water mains must be maintained in service except for shuts of limited duration. When mains are taken out of service, Contractor shall work continuously to bring the existing or new replacement mains back into service as quickly as possible. Contractor shall provide multiple crews complete with equipment to construct connections where necessary to limit valve shut durations to less than 4 hours.

D. All existing water transmission mains, 16-inch in diameter or larger, cannot be taken out of service at any time during the peak water demand season of May 15th to September 15th.

E. Temporary Service

1. The Contractor shall notify all customers affected by the Work of making the connections as to the time of day and the span of time required to make said connections. When the closing of a valve to make the connections will terminate water service to a customer(s), the Contractor shall arrange to supply temporary service and schedule the time which is most convenient to the customer(s) for making the connection. No extra compensation will be allowed for providing temporary service or making the connection at a time other than normal working hours.

2. When temporary water supply is not possible, valve shut duration shall be less than 4 hours.

F. Contractor must be prepared for and be able to handle moderate leakage when making connections to the existing water distribution system. Contractor must make provisions for dewatering existing trenches and piping to enable construction work to proceed. Should temporary taps or drain valves be required on existing piping, Contractor shall provide and install as required subject to the approval of the City. Moderate leakage, for the purposes of this paragraph, shall be defined as a valve or valves that leaks no more than what can be handled by

a single 3-inch trash or dewatering pump. The Contractor shall always include in his base bid the cost of providing a dewatering pump at each excavation location for connections, including all fuel and consumables required to run said pump for the duration of the connection work. City shall not be liable for delay damages or claims as a result of leaking or inoperable valves."

5. Add Section 01000, Subsection 1.42 – WATER SERVICES AND RECONNECTIONS with Paragraphs A through I as follows:

"1.42 WATER SERVICES AND RECONNECTIONS

A. All existing service lines connected to existing water mains to be abandoned shall be disconnected from said mains and reconnected to the new mains by the Contractor. The Contractor shall furnish all material, equipment, and labor for the complete installation in accordance with the KCMO Rules & Regulations for Water Service Lines. All service line reconnections will be made by the Contractor including all main taps. No connection to the new mains will be permitted until the new mains have been accepted by Water Services and put in service.

B. Service taps to the main shall be made in accordance with KCMO Rules & Regulations for Water Service Lines with the following exception:

Delete Section 4.02(a) and replace with the following: "Tapping shall be performed by the Contractor".

C. The connection of the tap service line to the corporation stop shall be made by means of a dielectric flared fitting or approved dielectric compression coupling.

D. No corporation tap shall be larger than 1" in diameter. On all service piping larger than 1" provide a branch tee on the new main as shown on the plans and a reducer as required for the connection. Service lines larger than 2" in diameter shall be ductile iron.

E. Contractor shall replace all service lines (2" and smaller) with new Type "K" copper with like size (¾" minimum) from the new main to a location shown on the Drawings (to either the new curb stop, to a splice location to the existing service line, or to the meter pit), or as otherwise directed by Water Services. If the existing meter pit is to be relocated or replaced in place, or a meter removed from the interior of the building to an outside meter pit, the new copper

service line must extend from the new main to the new meter pit as shown on the Drawings. A new curb stop assembly with valve box shall be installed at a location indicated on the Drawings or as directed by Water Services. Existing copper service connections may be spliced if shown on the Drawings to be spliced or as directed by Water Services with an approved fitting or coupling, provided the fitting or coupling is not located under pavement.

F. Installation of water service lines beneath streets and driveways shall be done by drilling or approved trenchless methods unless rock or other site conditions require open cut excavations.

G. After the reconnection, the immediate area will be prepared for surface restoration. Cleanup must be completed on all water service transfers at the end of each work day. No open excavation for service transfers will be allowed during non-working hours unless specifically approved by the City.

H. Existing water meters and tiles or curb stops, located in a position that will require their adjustment either vertically or horizontally because of proposed construction shall be relocated or adjusted by the Contractor. All materials used for the relocation or adjustment shall be new. No additional payment to the Contractor shall be allowed for any water service and meter adjustments.

I. When the existing water meter is located inside a building the Contractor shall gain entrance as agreed to by the owner/resident and remove the interior meter and appurtenances as further described herein.

1. The Contractor shall notify the owner/resident in writing to schedule an appointment to enter the building to remove the existing interior meter. The City will provide the Contractor a template of the letter for modification.

2. After installation of the new meter tile with appurtenances and the transfer of the water service line to the new main as shown on the plans, the Contractor shall enter the building as scheduled with the property owner/resident and remove the meter, meter yoke, and meter transmitting unit (MTU). In removing the MTU, the Contractor shall cut the wire to the MTU at the water meter and **not** at the MTU, preserving as much wire attached to the MTU as feasible for its reconnection in the meter tile. The gap in interior piping left by the removal of the water meter, meter yoke, and appurtenances shall be replaced with new

plumbing (Type K Copper) with approved couplings. All existing interior water shut off valves shall be preserved and remain in place.

3. Contractor shall coordinate with the City for installation of a new water meter and MTU in the meter tile. The Contractor shall place the MTU with its wire attached in the new meter tile for re-installation by Water Services. The existing water meter shall be salvaged by the Contractor for the City. At the direction of Water Services, the Contractor shall either re-install the existing meter in the meter tile or provide a temporary jumper in the meter yoke assembly to continue to supply water to the customer until a new water meter is installed.

4. All work inside the building shall be performed by a licensed plumber and paid for by the Contractor. Contractor shall obtain a document signed by the owner/resident accepting the completed private plumbing work within the residence."

6. Add Section 01000, Subsection 1.43 – ABANDONED WATER MAINS with Paragraphs A through C as follows:

"1.43. ABANDONED WATER MAINS

A. Water service lines connected to mains being abandoned shall be reconnected to new mains in accordance with the Rules and Regulations for Water Service Lines, unless shown otherwise. The end of all abandoned water mains shall be plugged with sufficient concrete to prevent backfill material from entering the pipe.

B. Covers, lids, and standpipes on all abandoned valves shall be removed to at least two feet (2') below grade and the area shall be properly backfilled and restored in accordance with the specifications.

C. Existing fire hydrants that are removed shall be salvaged by the Contractor for the City and returned to the Water Services store yard at 2409 East 18th Street."

C. Section 01020 – Record Documents

1. In accordance with Section 01020, Subsection 1.04 – CODES AND STANDARDS, Record Documents shall conform to the KCWSD CAD Design Standards and Specifications. The document can also be accessed from the following website:

https://www.kcwater.us/wp-content/uploads/2024/08/KCWSD-Cad-Standards-816-24.pdf

2. Add the following to Section 01020, Paragraph 3.04D – CONFORMING TO CONSTRUCTION DRAWINGS:
"The Contractor shall be responsible for developing Conforming to Construction Drawings. CAD files to be provided to the Contractor for preparation of Conforming to Construction Record Drawings shall be in AutoCAD.dwg format (2018 or more recent), Autodesk Civil 3D (2018 or more recent), or AutoCAD Map 3D (2018 or more recent)."

D. Section 01300 – Submittals

1. Add the following Subparagraph 2 to Section 01300, Subsection 1.05 F – SUBMITTALS REQUIRED FOR THE PRECONSTRUCTION CONFERENCE as follows:

"2. The following are the items requiring submittals by the Contractor for the pre-construction conference. These submittals need to be submitted through E-Builder in the 'Submittals' tab. Submittals shall indicate, but not be limited to, name of manufacturer, shop drawings, physical & chemical testing & certification, appurtenances used, etc.:

a. Water Project Submittals:
   i. Ductile iron pipe, CL52 & CL54 with type of joint used.
   ii. Polyethylene encasement.
   iii. Mechanical Joint fittings (tees, cross, reducers, bends, plugs, anchor couples, etc.).
   iv. Tapping sleeve and valve.
   v. Restrained joints used (Mega-Lug, anchored coupling, push-on).
   vi. Gate and butterfly valves with base, lid and cover used in both traffic and non-traffic areas.
   vii. Solid sleeve.
   viii. Asphalt.
   ix. Fire Hydrants.
   x. Concrete mix (backing block, straddle block, encasement, etc.).
   xi. Encasement.
   xii. Casing Pipe w/ spacers and end seals.
   xiii. Service Transfers:
      (i) Corporation stops.
      (ii) Dielectric insulating assembly.
      (iii) Copper service piping.
      (iv) Curb stop with base, box and lid/cover.
      (v) Services coupling (new to existing).
      (vi) Meter Tiles with Covers.
      (vii) Meter Yoke and Appurtenances.

xiv. Testing and Disinfection:
   (i) Pressure testing procedure.
   (ii) Chlorination procedure.
   (iii) MSDS form.
   (iv) Testing Lab.
xv. Air Release Valves and Vault
xvi. Erosion Control:
   (i) Gutter Sock.
   (ii) Silt Fence.
   (iii) Other Roller Erosion Control Products.
xvii. Bedding & Backfill Material.
xviii. Sod/Seeding Documentation and Certification.
xix. Construction Schedule."

2. Add Section 01300, Subsection 1.06 – SCHEDULE OF VALUES with Paragraphs A and B as follows:

"1.06 - SCHEDULE OF VALUES

A. As provided in the General Conditions, and after review of the preliminary progress schedule at the preconstruction conference and before submission of the first Application for Payment, Contractor shall prepare and submit to City for review a Schedule of Values for the construction phases of the project. The Schedule of Values, showing the estimated quantity and value of each kind of work must be approved by City before any Application for Payment is prepared.

B. The Schedule of Values for the construction phase portion of the project shall include at least the following items, adjusted for size and type where indicated:"

ITEM	DESCRIPTION	UNIT	UNIT COST	TOTAL COST
1.	Mobilization	LS		
2.	Permits	LS		
3.	Traffic Control	LS		
4.	SWPPP & Erosion Control	LS		
5	Pre-Construction Photographs	LS		
6.	Construction Staking	LS		
7.	Transmission Water Main DIP Class 54 Waterline w/Excavation & Backfill – Specify size(s)	LF		
8.	Distribution Water Main DIP Class 52 Waterline w/Excavation & Backfill – Specify size(s)	LF		

ITEM	DESCRIPTION	UNIT	UNIT COST	TOTAL COST
9.	Bends w/ Backing Blocks – Specify size(s) and degree(s)	EA		
10.	Sleeves and Reducers – Specify size(s)	EA		
11.	Tees w/ Backing Block – Specify size(s)	EA		
12.	Valves – Specify size(s)	EA		
13.	Straddle Blocks – Specify size(s) of Water Main	EA		
14.	Water Service Line Transfers – Specify size(s)	EA		
15.	Curb Stop Installation	EA		
16.	Meter Relocation	EA		
17.	Sewer Crossing	EA		
18.	Gas Crossing	EA		
19.	Fire Hydrant	EA		
20.	Flushing Assembly	EA		
21.	Air Release Valve (specify size) with Vault	EA		
22.	Street Pavement Removal & Replacement	SF		
23.	Driveway Removal & Replacement	SF		
24.	Sidewalk and Curb Removal & Replacement	SF		
25.	Testing and Disinfection (by Segment)	EA		
26.	Connections to Existing Mains (by Segment)	EA		
27.	Seeding	SF		
28.	Sodding	SF		
30.	Landscaping	LS		
31.	Demobilizations / Cleanup	LS		
32.	Allowance	LS		
33.	"As Built" Drawings & Project Record Documents	LS		

3. In accordance with Section 01300, Subsection 1.03 – GENERAL INFORMATION, Paragraph F, the following is a list documents that are to be submitted in electronic and hard copy formats:

    a. Preliminary Project Schedule, submit one (1) copy.

    b. Project Baseline Schedule, submit one (1) copy.

    c. Progress Schedules, submit one (1) copy.

    d. Project Recovery Schedules (as applicable), submit one (1) copy.

    e. Documents that are to be submitted in hard copy format are to be delivered to the following:

        Water Services Department

4800 East 63rd Trafficway
Kansas City MO 64130-4626
Attn: Davis McDonald-MacLin, Project Manager

E. Section 01320 – Construction Progress Documentation

1. In accordance with Section 01320, Paragraph 1.08 – SCHEDULE LEVEL, the Contractor shall provide a Schedule Level that meets the minimum requirements of a Level 3 - Detail Schedule as described in Paragraph 1.06M. The Contractor shall prepare all schedules using Primavera version P6 (or higher) or Microsoft Project.

2. In accordance with Section 01320, Paragraph 1.11B – SCHEDULE REQUIREMENTS a Cost Correlation is not a requirement of this Project.

F. Section 01322 – Photographic Documentation

1. In accordance with Section 01322, Subsection 1.07 – MINIMUM REQUIREMENTS, the minimum documentation requirements for this project shall be as follows:

   a. A pre-construction video will not be required as part of the Project.

   b. A Haul Route Video will not be required as part of the Project.
   c. Pre-Construction Photographs **will be required** as part of the Project.

   d. Construction Progress Photographs will not be required as part of the Project.

   e. Construction Activity Photographs will not be required as part of the Project.

   f. Post-Construction Photographs will not be required as part of the Project.

G. Section 01335 – Document Management

1. In accordance with Section 01335, Subsection 1.01 – SUMMARY, the document management system (DMS) will be eBuilder.

H. Section 01500 – Temporary Facilities

1. In accordance with Section 01500, Subsection 3.01-OFFICE, the Contractor will be allowed to use an assigned vehicle in lieu of a stationary office.

2. In accordance with Section 01500, Subsection 3.02 - FIELD OFFICE FOR RESIDENT PROJECT REPRESENTATIVE, the Contractor is not required to provide a field office for the Resident Project Representative.

I. Section 01570 – Temporary Erosion Sediment Control

1. In accordance with Section 01570, Subsection 1.01 - SUMMARY, the Contractor will be responsible for the preparation of Erosion Control Plans. Sensitive areas to be disturbed by the Work that as less than one acre have not been identified.

J. Section 01580 – Project Signs

1. Printers: The following is a list of local businesses who have provided printing services for City project signs. Printing location shall be coordinated with the City/Design Professional.

   a. Almar Printing
      7735 Wornall Road
      Kansas City, MO 64114
      Phone: (816) 523-4566

   b. Custom Color
      14320 W. 101st Terrace
      Lenexa, KS 66215
      Phone: (913) 730-3100

   c. KC Blueprint Company
      1804 Swift St.
      North Kansas City, Missouri 64116
      816-513-1048 Print Center
      816-527-0900 Home Office

   d. Office Max

   e. City Hall Basement Print Center
      414 E. 12th Street
      Kansas City, MO 64106
      Phone: (816) 513-1048

2. In accordance with Section 01580. Subsection 2.05 – NUMBER OF SIGNS TO BE PROVIDED, the Contractor shall provide four (4) project signs.

K. Section 01581 – Public Communications

1. In accordance with Section 01581, Subsection 1.10 – OTHER COMMUNICATIONS, the Contactor shall notify the owner/resident of buildings with interior water meters to schedule an appointment for removal of the existing water meter. The City will provide a template for the notification and mailing list of affected property owners. Contractor shall be responsible for reproduction, mailing and delivery of the notifications. Costs to produce and deliver notifications shall be included in the Contractor's Bid.

L. Section 01700 – Traffic Control

1. In accordance with Section 01700, Subsection 1.08 – SPECIFIC PROJECT REQUIREMENTS:

    a. Contractor shall maintain a minimum of one (1) lane of traffic in each direction at all times except as approved by Public Works.

    b. Contractor shall keep residents, schools, businesses, churches, and other public entities informed of the work schedule that would interfere with access to their facility. Notification shall be distributed at least 3 weeks in advance of work occurring near a facility.

    c. Contractor shall coordinate as necessary travel routes for KCATA buses during lane closures.

2. In accordance with Section 01700, Subsection 1.08 – SPECIFIC PROJECT REQUIREMENTS:

    a. Traffic Control Plans shown in the Design Plans (Sheets 67-73) shall act as a guide for the actual traffic control plans that are required to be submitted to obtain a Traffic Control Permit.

    b. The traffic control plans included within the plan set shall, in no way, subrogate the Contractor and Traffic Control Supervisor's responsibility for developing a traffic control plan that is safe and effective, and which meets Public Work's requirements for obtaining a traffic control permit.

    c. General Traffic Control requirements shall include but are not limited to the following:

i. Contractor shall maintain a minimum of one (1) lane of traffic each direction at all times on all streets.

ii. Contractor shall keep residents, schools, businesses, churches, and other public entities informed of the work schedule that would interfere with access to their facility. Notification shall be distributed at least 3 weeks in advance of work occurring near a facility.

iii. Contractor shall coordinate as necessary travel routes for KCATA buses during land closures.

DIVISION 2 – SITEWORK, SPECIFICATION MODIFICATIONS

A. Division 2 is modified as follows:

1. PAVEMENT REMOVAL AND RESTORATION, Public Right of Way

a. Kansas City, Missouri Public Works Department Standard Detail SR-1, Street Cut Restoration is hereby incorporated by reference.

b. Removal and restoration of pavement shall be in accordance with Standard Detail SR-1 unless otherwise instructed by the City.

2. PARKS AND RECREATION RESTORATION

a. There are certain locations within the City where the infrastructure is under the jurisdiction of the Parks and Recreation Department. These areas include City parkways and major arterial streets designated as parkways. Surface restoration in these areas must be done in accordance with KCMO Parks & Recreation.

B. Section 02200 – Earthwork

1. In accordance with Section 02200, Part 1 – GENERAL ,Part 2 – PRODUCTS and Part 3 – EXECUTION:

a. See Section 02617 for requirements associated with products and execution as it pertains to pipe insulation.

i. See SH53 and SH54 of the Approved for Construction Drawings.

C. Section 02250 – Trenching, Pipe Embedment and Backfill

2. In accordance with Section 02250, Subsection 3.02 – PAVEMENT REMOVAL AND RESTORATION:

a. Kansas City, Missouri Public Works Department Standard Detail SR-1, Street Cut Restoration is hereby incorporated by reference.

b. Removal and restoration of pavement shall be in accordance with Standard Detail SR-1 with the following exceptions:

i. General Notes: Requirement to contact the City Forester when digging within five feet of a tree is removed.

ii. General Note 2, Bedding: the note shall be deleted. Bedding requirements shall conform to Section 02250 – Trenching and Backfilling for Utilities.

iii. General Note 3, Backfill: the note shall be deleted. Backfill and compaction shall conform to this to Section 02250 – Trenching and Backfilling for Utilities.

iv. General Note 5.B, Grass Areas: Precedence to the requirements for grading and establishment of turf shall be given to the grading, seeding and sodding specifications in Contract Documents.

v. General Note 9: Manhole castings shall meet the requirements of Section 05010 – Sanitary Sewer Manhole Castings.

vi. Pavement restoration for asphalt pavement shall be completed by replacing the 2-inch patch (Type 5-01) asphalt surface portion of detail 1 with concrete. The concrete shall be placed monolithically with the Portland Cement Concrete Cap portion of the pavement repair. The concrete shall be placed and finished per the requirements of Kansas City, Missouri Public Works standards section 2208 Portland Cement Concrete Pavement.

3. In accordance with Section 02250, Part 1 – GENERAL ,Part 2 – PRODUCTS and Part 3 – EXECUTION:

b. See Section 02617 for requirements associated with products and execution as it pertains to pipe insulation.

i. See SH53 and SH54 of the Approved for Construction Drawings.

D. Section 02575 – Surface Restoration

1. In accordance with Section 02575, Subsection 3.06 – STREET CUT RESTORATION:

   All pavement restoration work in streets shall conform to KCMO PW SR-1, unless otherwise instructed by the City, with the following exceptions:

   a. Subgraph A.3 does not apply.

   b. Bid Price for the Pavement Removal and Restoration shall represent the Work required to conform to the PW SR-1 detail as modified by Section 01015 and Section 02250.

E. Section 02675 – Flushing, Testing and Disinfection of Water Mains

1. Scheduling the Work

   a. No Working Hours Adjustments have been identified.

F. Section 02618 – Ductile Iron Pipe Water Main

1. In accordance with Section 02618, Subsection 1.06 – SUBMITTALS:

   a. Complete shop drawings and engineering data on all piping and accessories shall be submitted to the City in accordance with the requirements of Section 01300 – Submittals.

G. Section 02930 – Seeding

1. In accordance with Section 02930, paragraph 1.02, all areas disturbed by construction operations shall be seeded if area(s) not comprised of established sod unless directed otherwise by the City.

H. Section 02931 – Sodding

1. In accordance with Section 02931, paragraph 1.02, all areas disturbed by construction operations shall be sodded if area(s) comprised of established sod unless directed otherwise by the City.

3.03 DIVISION 3 – CONCRETE, SPECIFICATION MODIFICATIONS

A. Division 3 - No Modifications

3.04 DIVISION 4 – MASONRY, SPECIFICATION MODIFICATIONS

A. Division 4 - Not used

3.05 DIVISION 5 – METALS, SPECIFICATION MODIFICATIONS

A. Division 5 - No Modifications

3.06 DIVISION 6 – WOODS AND PLASTICS, SPECIFICATION MODIFICATIONS

A. Division 6 - No Modifications

3.07 DIVISION 7 – THERMAL AND MOISTURE PROTECTION, SPECIFICATION MODIFICATIONS

A. Division 7 - Not used

3.08 DIVISION 8 – DOORS AND WINDOWS, SPECIFICATION MODIFICATIONS

A. Division 8 - Not used

3.09 DIVISION 9 – FINISHES, SPECIFICATION MODIFICATIONS

A. Division 9 - Not used

3.10 DIVISION 10 – SPECIALITIES, SPECIFICATION MODIFICATIONS

A. Division 10 - Not used

3.11 DIVISION 11 – EQUIPMENT, SPECIFICATION MODIFICATIONS

A. Division 11 - Not used

3.12 DIVISION 12 – FURNISHINGS, SPECIFICATION MODIFICATIONS

A. Division 12 - Not used

3.13 DIVISION 13 – SPECIAL CONSTRUCTION, SPECIFICATION MODIFICATIONS

A. Division 13 - Not used

3.14 DIVISION 14 – CONVEYANCE SYSTEMS, SPECIFICATION MODIFICATIONS

A. Division 14 - Not used

3.15 DIVISION 15 – MECHANICAL/PLUMBING, SPECIFICATION MODIFICATIONS

A. Division 15 - Not used

3.16 DIVISION 16 – ELECTRICAL, SPECIFICATION MODIFICATIONS

A. Division 16 - Not used

END OF SECTION

SECTION 02617 – PIPE INSULATION

PART 1 - GENERAL

1.01 SUMMARY

A. All insulation materials shall be stored in an area protected from the weather and kept dry before and during applications. All piping shall be cleaned of foreign substances and free of surface moisture prior to and during the application of insulation. All weld beads must be ground smooth with the surface of the pipe prior to application of the insulation. Insulation shall be installed around polywrapped pipe.

1.02 SPECIFICATION MODIFICATIONS

A. It is understood that throughout this section these Specifications may be modified by appropriate items in Section 01015 – Specific Project Requirements or as otherwise indicated on the Contract Drawings.

1.03 RELATED SECTIONS

A. Section 01000 – General Project Requirements.
B. Section 01015 – Specific Project Requirements.
C. Section 01300 – Submittals.
D. Section 02200 – Earthwork.
E. Section 02250 – Trenching, Pipe Embedment and Backfill.

1.04 CODES AND STANDARDS

A. The publications listed below form a part of this specification to the extent referenced. The publications are referred to within the text by the basic designation only.
B. American Society for Testing and Materials (ASTM):

ASTM C552	Standard Specification for Cellular Glass Thermal Insulation
ASTM E96	Standard Test Methods for Water Vapor Transmission of Materials
ASTM C240	Standard Test Methods for Testing Cellular Glass Insulation Block
ASTM C165	Standard Test Method for Measuring Compressive Properties of Thermal Insulations
ASTM E136	Standard Test Method for Combustibility of Materials
ASTM E84	Standard Test Method for Surface Burning Characteristics of Building Materials
ASTM C303	Standard Test Method for Dimensions and Density of Preformed Block and Board–Type Thermal Insulation
ASTM C203	Standard Test Methods for Breaking Load and Flexural Properties of Block-Type Thermal Insulation
ASTM E228	Standard Test Method for Linear Thermal Expansion of Solid Materials with a Push-Rod Dilatometer
ASTM C623	Test for Elastic Properties of Glass and Glass-Ceramic by Resonance
ASTM C177	Standard Test Method for Steady-State Heat Flux Measurements and Thermal Transmission Properties by Means of the Guarded-Hot-Plate Apparatus
ASTM C518	Standard Test Method for Steady-State Thermal Transmission

ASTM D226 Asphalt Saturated Organic Felt

1.05 QUALITY ASSURANCE

A. Contractor is responsible for the quality assurance and quality control of the Work. The Work shall be performed by a Contractor with a proven record of performance for similar installations. The Contractor shall submit the following certification and warranty:
   1. Manufacturer's Warranty.

1.06 CONTRACTOR SUBMITTALS

A. Drawings, specifications, data and certificates covering all proposed materials being furnished shall be submitted to the Owner/Design Professional for review and approval in accordance with Section 01300 – Submittals and as defined in this Section.
B. Prior to commencing with construction, the Contractor shall submit the following for the Owner/Design Professional for approval:
   1. Product Data:
      a. Pipe Insulation System (all components).
   2. Shop Drawings:

Pipe Insulation System (all components).

1.07 PRODUCT DELIVERY, STORAGE AND HANDLING

A. Delivery, storage and handling of materials shall be in accordance with manufacturer's recommendation.
   1. Must be stored in an area protected from the weather and kept dry before and during applications.

PART 2 – PRODUCTS

2.01 INSULATION:

A. Pipe insulation shall be designed and manufactured in accordance with ASTM C 552.
B. Pipe insulation shall be:
   1. FOAMGLAS® insulation by Pittsburgh Corning Corporation .
C. Insulation Thickness:
   1. 2 inches in thickness.

2.02 JACKETING:

A. Jacketing for pipe insulation shall be designed and manufactured in accordance with ASTM E 96.
B. Pipe insulation jacking shall be:
   1. PITTWRAP jacketing by Pittsburgh Corning Corporation.
      a. See Product Data Sheet FI-209.
      b. See Technical Data Letter #244.

2.03 ASPHALT COATING:

A. Asphalt coating shall be:
   1. PITTCOTE 300 Finish by Pittsburgh Corning Corporation.
      a. See Product Data Sheet FI-120.

2.04 REINFORCING FABRIC:

A. Reinforcing fabric shall be:
   1. PC Fabric 79 by Pittsburgh Corning Corporation
      a. See Product Data Sheet FI-159.

2.05 STRAPPING TEE:
A. Strapping tee for pipe insulation shall be designed and manufactured in accordance with ASTM D3330
B. Strapping tee shall be:
   1. Scotch brand #880 by 3M.
C. Material:
   1. Polyester reinforced yarn filament.
D. Width:
   1. 1 inch in width.

2.06 BORE COATING:
A. Bore coating shall be:
   1. Hydrocal B-11, by U.S. Gypsum

2.07 HIGH-TEMPERATURE SEALANT:
A. High-temperature sealant shall be:
   1. PC RTV 450 Silicone Adhesive by Pittsburgh Corning Corporation
      a. See Product Data Sheet FI-244.
   2. Maximum temperature limit:
      a. 400 degrees F continuous service.

2.08 ROOFING FELT:
A. Roofing felt shall be designed and manufactured in accordance with ASTM D226

PART 3 – EXECUTION

3.01 PREPARATION
A. After the nominal system diameter is determined (pipe diameter plus installation thickness), the trench shall be excavated to allow 6 inches of minimum clearance in all directions around the final outer diameter (O.D.) of the system. The trench width requirements within Section 02200 shall be followed.
B. The bottom of the trench shall be graded to the design slope of the piping and to provide uniform bearing along its entire length. Where wet or unstable soils are encountered, such soil shall be removed to a sufficient depth. If Foundation is required, Section 02200 shall govern. Granular bedding shall be installed in a 3-inch layer if foundation is required and a 6-inch layer if a foundation is not installed. Section 0220 shall govern.
C. This backfill shall be compacted to a density equal to that of the acceptable portions of the trench. Where excavation of rock is required, the rock shall be excavated to an over-depth of 6 inches (minimum) below the insulation. Over-depths in rock shall be backfilled with granular bedding and installed per Section 02200.
D. All insulated piping shall rest in a 6-inch layer of compacted sand per the recommendations of Foamglas.
E. Excavation shall be kept free of standing water during insulation and jacketing application.

3.02 INSTALLATION APPLICATION

A. Insulation and jacketing shall be applied to piping in 10-foot segments (maximum length). After the completion, the segments shall be rotated 180 degrees and the bottom of the jacketing and butt strips shall be inspected for proper application and sealing. If any defects are visible, they must be corrected. Major defects may require removal and reinstallation. Assuming proper jacketing and sealing, the segments are rotated back into position and the connecting butt strips are applied.

B. Field jacketed insulation: the last section of FOAMGLAS® pipe covering the 10-foot segment shall be cut even to form a through joint between completed segments.

C. Large diameter piping (> 12 inches): shorter segments can be insulated and jacketed if more practical.

D. Abrasion: insulation sections for piping shall be bore coated.

E. Special considerations: the completed insulated segment is rotated and inspected before installing the connecting section of insulation at the anchors, guides, expansion loops, elbows, etc.

1. Field jacketed FOAMGLAS® insulation shall be applied to the piping with butt joints staggered and tightly butted. Longitudinal and butt joints shall be left dry. All joints shall be tightly fitted to eliminate voids by refitting or replacing sections of insulation. Each section of insulation shall be held in place by two wraps of strapping tape with a 50% overlap per wrap.
2. FOAMGLAS® insulation which has been pre-jacketed with PITTWRAP jacketing shall be applied joint-to-joint with all joints tightly butted. Strapping tape may be used over the jacketing to temporarily secure the insulation until longitudinal laps are sealed and butt strips applied.
3. Pre-Insulation of Pipe: Where conditions permit, FOAMGLAS® insulation and jacketing may be applied outside of the trench to sections of piping. Pipe lengths should be insulated in segments. The length of insulation segment should not exceed 10 feet. Leave uninsulated spaces between segments to allow for placement of slings by which the pipe can be lowered into the trench. The use of a spreader bar with two slings or more is recommended. The quantity and location of sling placement recommendation shall be provided by the contractor and approved by the Design Professional during construction to avoid excessive deflection and facilitate proper control of the pipe length during transfer. After the sections of pipe are in place in the trench, and ends of the sections secured, insulation and jacketing shall be applied to the joint areas and uninsulated spaces that were not completed above ground. Adequate working space should be maintained for installation personnel.

3.03 JACKETING APPLICATION

A. Apply the specified jacketing in strict accordance with the appropriate product data sheet. Request Technical Data Letter #244 for quality control installation methods. Seal all overlaps and butt strips as noted in the product data sheet to ensure that ground water cannot penetrate the jacket system.

1. Irregular Surfaces:
   a. At all irregular surfaces such as elbows, tees, fitting covers, etc., the PITTWRAP® jacketing shall be precut to fit the contour of the surface to which it is to be applied. Precut sections shall allow for 2 inches of overlap. All laps shall be sealed. In addition to sealing the PITTWRAP® jacketing on

these irregular surfaces, a smooth coat (applied manually with a glove) of the PITTCOTE® 300 coating shall be applied over the jacketing. First, carefully burn away the exterior plastic film on the PITTWRAP® jacketing. Then apply a smooth coat (manually with a glove) of PITTCOTE® 300 coating. While still tacky, embed a layer of reinforcing fabric in the coating. After one hour, apply a second coat of PITTCOTE® 300 coating over the first coat. Total wet film thickness of the two coats should be 1/8 inch minimum. As an alternative to the cutting and fitting of PITTWRAP® jacketing on fittings, a five-layer application of PITTCOTE® 300 coating may be used. The coating shall be applied in accordance with the procedures found in product data sheet FI-120, in alternating layers of asphalt, reinforcing fabric, asphalt fabric and asphalt, totaling five layers. Total wet film thickness shall be 1/4 inch minimum. If backfilling takes place less than 24 hours after PITTCOTE® 300 coating is applied, roofing felt shall be placed over the coating before backfilling. Ends and bore of insulation left exposed at day's end shall be sealed between the insulation and the pipe with PITTCOTE® 300 coating to prevent bulk water entry. All completed work shall be backfilled as soon as possible to prevent damage to the insulation system.

3.04 INSPECTION

A. After application of the jacketing system to all straight and irregular sections of insulation, visually inspect all laps, seams, butt strips and smooth coated (glove applied) areas to ensure that these areas are sealed from water entry in accordance with the specifications and appropriate product data sheets.

B. After the completion of insulation and jacketing installation, the segments shall be rotated 180 degrees and the bottom of the jacketing and butt strips shall be inspected for proper application and sealing. If any defects are visible, they must be corrected. Major defects may require removal and reinstallation.

3.05 BACKFILLING

A. The trench shall be carefully backfilled utilizing granular bedding per Section 02250 . Care shall be taken not to damage the PITTWRAP® jacketing during backfilling. Backfill shall be applied in 6-inch lifts, tamping each lift until a depth of 6 inches over the insulated pipe is reached. The remainder of the trench shall be backfilled with Granular Fill in accordance with Section 02250.

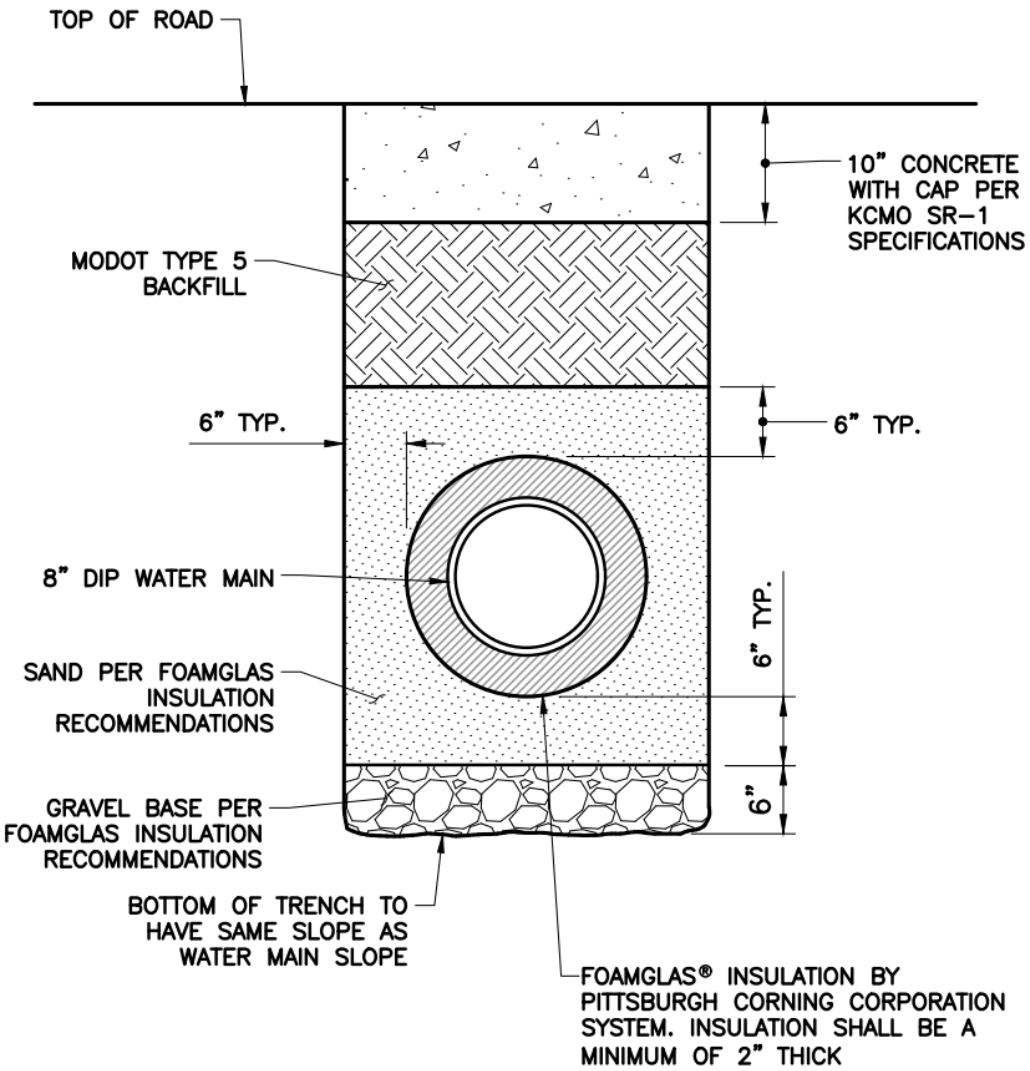

FOAMGLAS ® INSULATION SYSTEM DETAIL

END OF SECTION

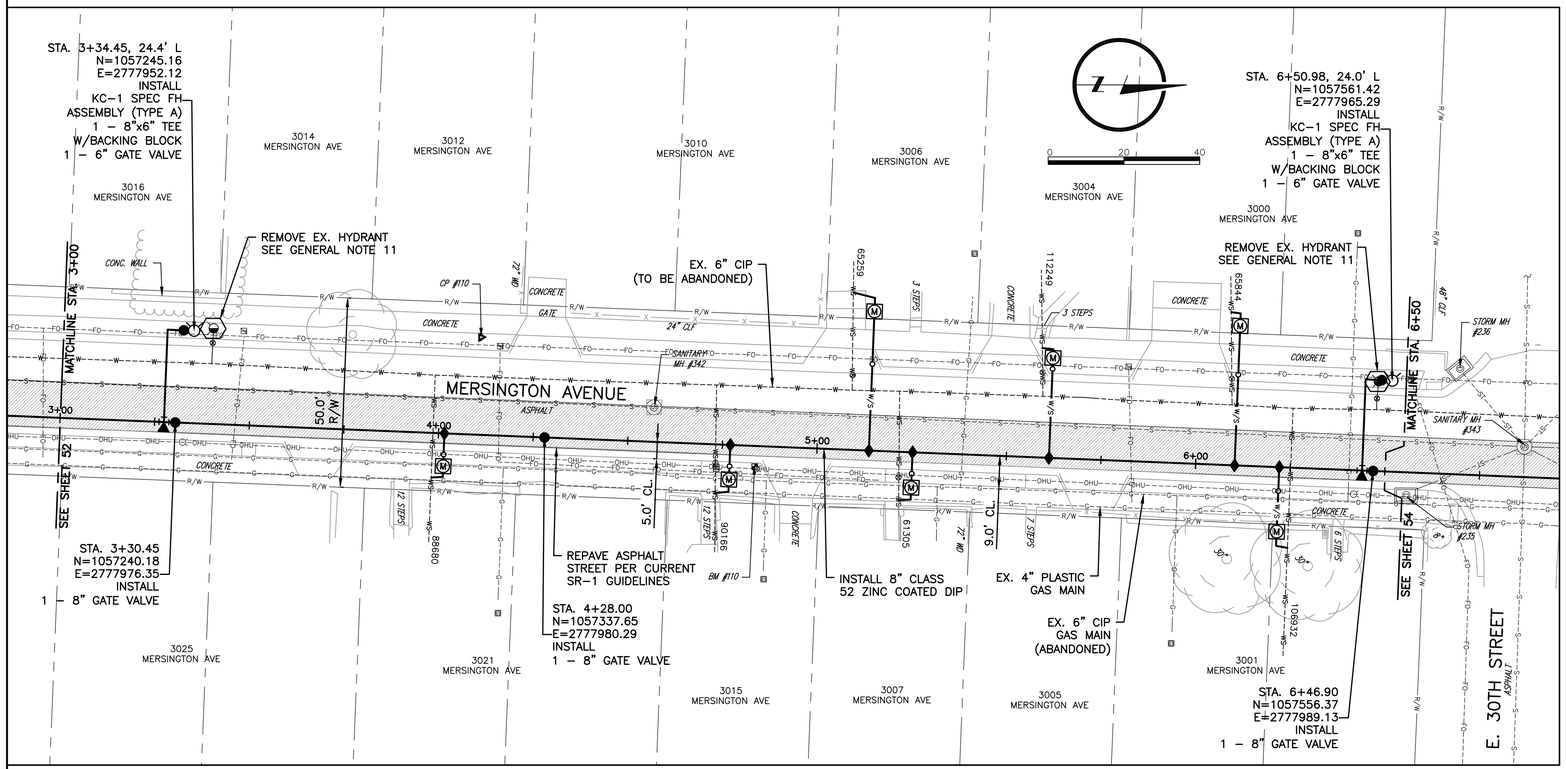

ADDRESS	Zip Code	Register Number	Main to Curb		Curb In		Install Curb box	Relocate Meter
			Size	Type	Size	Type		
3021 MERSINGTON AVE	64128	88680	3/4	K	3/4	K	Y	Y
3015 MERSINGTON AVE	64128	90166	3/4	K	3/4	K	Y	Y
3006 MERSINGTON AVE	64128	65259	3/4	G	3/4	K	Y	Y
3007 MERSINGTON AVE	64128	61305	3/4	K	3/4	K	Y	Y
3004 MERSINGTON AVE	64128	112249	3/4	K	3/4	K	Y	Y
3000 MERSINGTON AVE	64128	65844	3/4	K	3/4	G	Y	Y
3001 MERSINGTON AVE	64128	106932	3/4	K	3/4	G	Y	Y

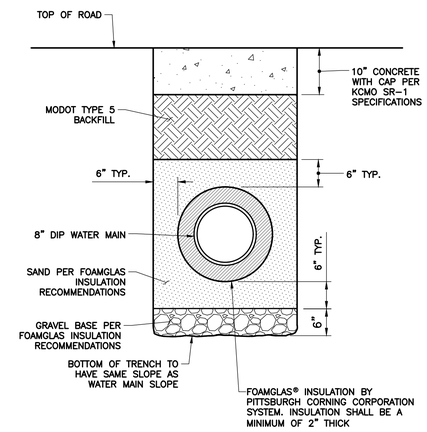

FOAMGLAS ® INSULATION SYSTEM DETAIL

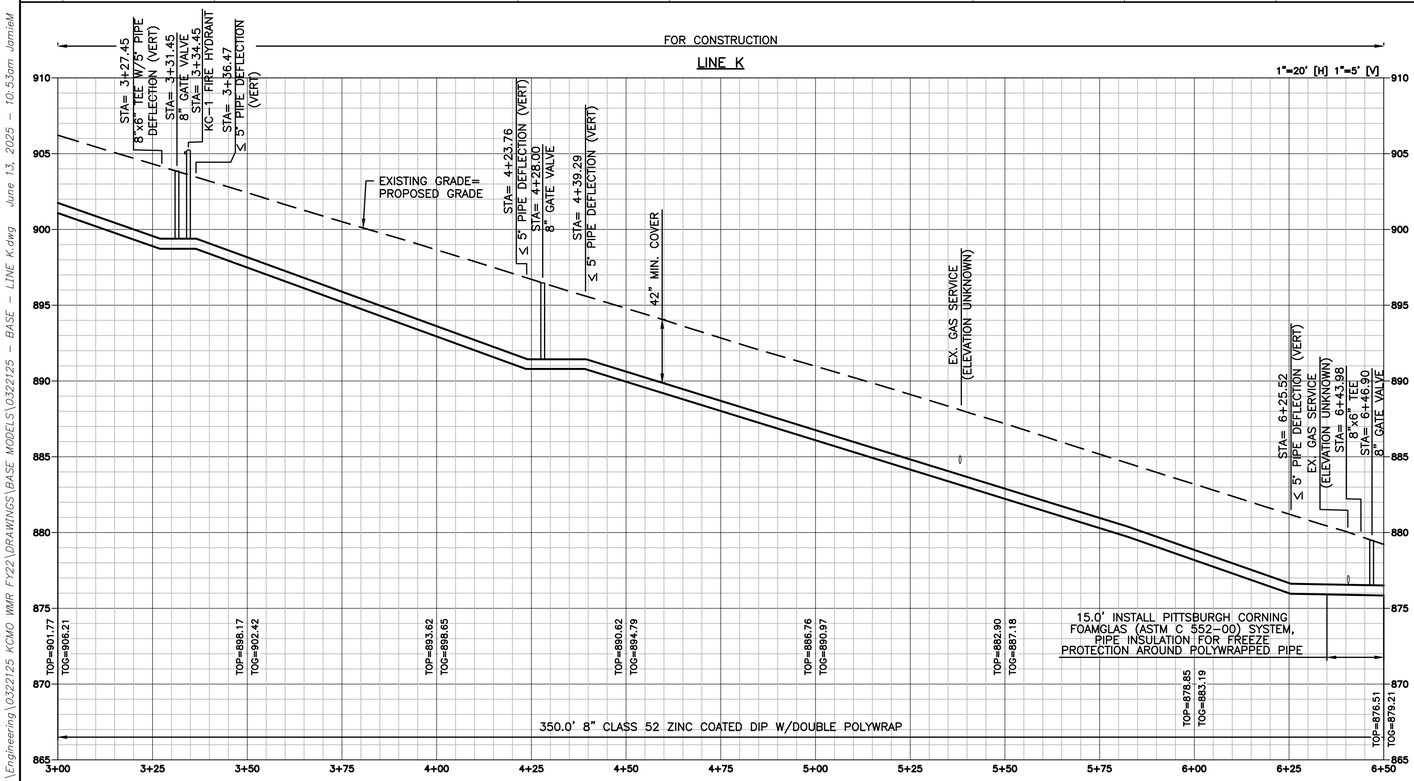

THE PROFESSIONAL WHOSE SIGNATURE AND PERSONAL SEAL APPEARS BELOW ASSUMES RESPONSIBILITY ONLY FOR WHAT APPEARS ON THIS PAGE, AND DISCLAIMS (PURSUANT TO SECTION 327.411 RSMO) ANY RESPONSIBILITY FOR ALL OTHER PLANS, SPECIFICATIONS, ESTIMATES, REPORTS, OR OTHER DOCUMENTS OR INSTRUMENTS NOT SEALED BY THE UNDERSIGNED PROFESSIONAL RELATING TO OR INTENDED TO BE USED FOR ANY PART OR PARTS OF THE PROJECT TO WHICH THIS PAGE REFERS.

PROFESSIONAL ENGINEER SEAL

STATE OF MISSOURI
MELANIE R. JOLLETT
NUMBER
PE-2019000282
6/13/2025
PROFESSIONAL ENGINEER

MELANIE R. JOLLETT
PE-2019000282

FOR WSD USE:

KANSAS CITY, MISSOURI WATER SERVICES DEPARTMENT

WATER MAIN REPLACEMENT
IN THE AREA OF
COLLEGE AVENUE TO NORTON AVENUE,
E. 21ST STREET TO E. 31ST STREET
KANSAS CITY, JACKSON COUNTY, MISSOURI

LINE K PLAN/PROFILE
8" WATER MAIN MERSINGTON AVENUE
E. 31ST STREET TO E. 28TH STREET

DRAWN BY:	CHECKED BY:	DATE SUBMITTED	RANGE	TOWNSHIP	SECTION
AJM	MRJ	06-13-2025	33W	49N	15

CONTRACTOR	DATE COMPLETED
–	–

CONTRACT NO.	CONTRACT DATE	MAP NO.	WM EXTENSION #	DRAWING NO.
DPS – 9662 CCN – 9663	–	C-65	–	D-20909

PROJECT NO. 80002336

SHEET 53 OF 73

LAMP RYNEARSON
9001 State Line Rd., Ste. 200
Kansas City, MO 64114
816.361.0440
LampRynearson.com
Contact Person: MELANIE R. JOLLETT
LAMP RYNEARSON - ENGINEERS
MO CERTIFICATE OF AUTHORITY NO. F01294734

L:\Engineering\0322125 KCMO WMR FY22\DRAWINGS\BASE MODELS\0322125 - BASE - LINE K.dwg June 13, 2025 - 10:53am JamieM

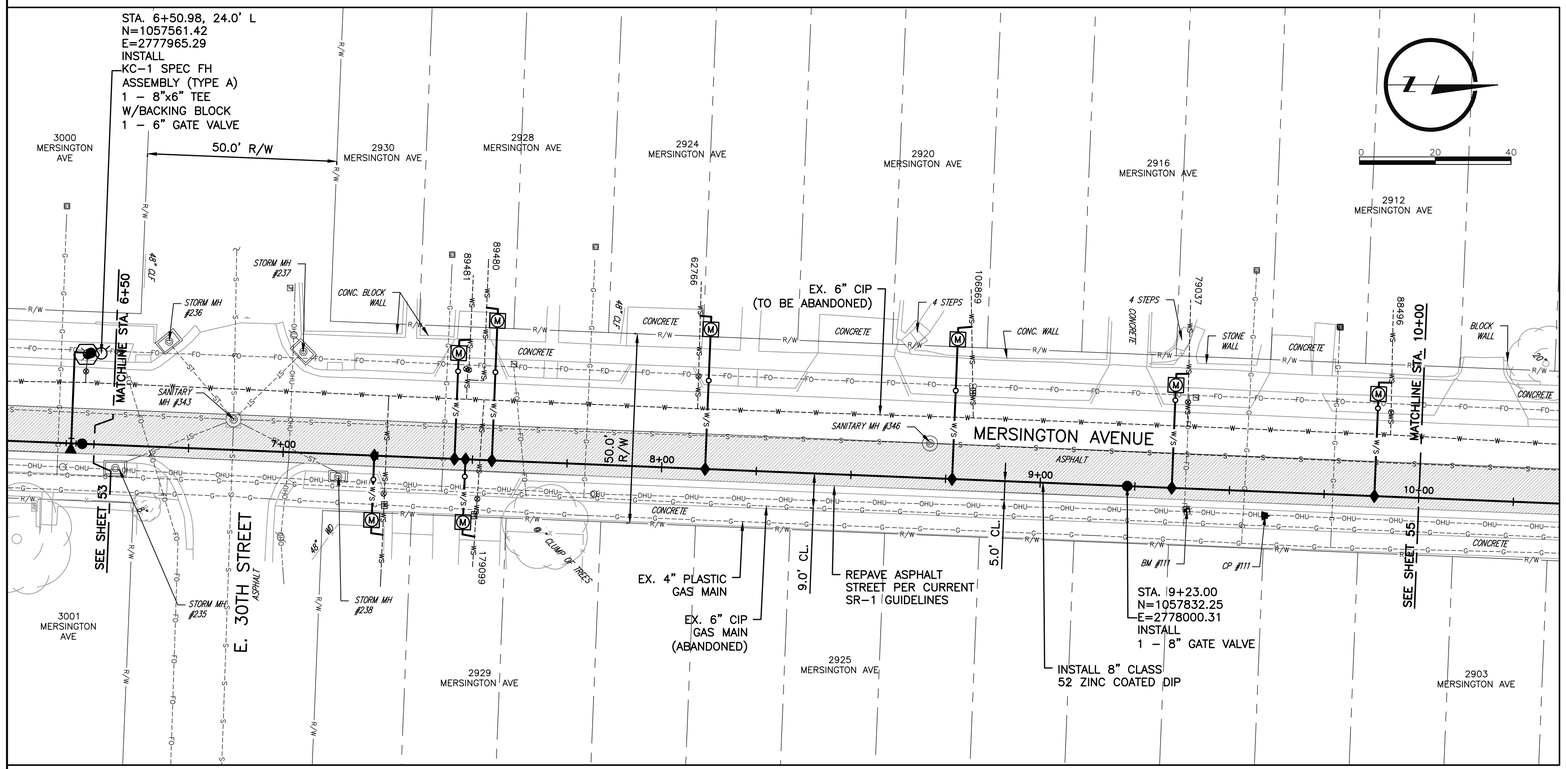

ADDRESS	Zip Code	Register Number	Main to Curb		Curb In		Install Curb box	Relocate Meter
			Size	Type	Size	Type		
2929 MERSINGTON AVE	64128	UNK	3/4	K	3/4	UNK	Y	Y
2930 MERSINGTON AVE	64128	89481	3/4	G	3/4	G	Y	Y
2929 MERSINGTON AVE	64128	179099	1	K	3/4	K	Y	Y
2928 MERSINGTON AVE	64128	89480	3/4	K	3/4	G	Y	Y
2924 MERSINGTON AVE	64128	62766	3/4	G	3/4	G	Y	Y
2920 MERSINGTON AVE	64128	106869	3/4	K	3/4	K	Y	Y
2916 MERSINGTON AVE	64128	79037	3/4	K	3/4	K	Y	Y
2912 MERSINGTON AVE	64128	88496	3/4	G	3/4	K	Y	Y

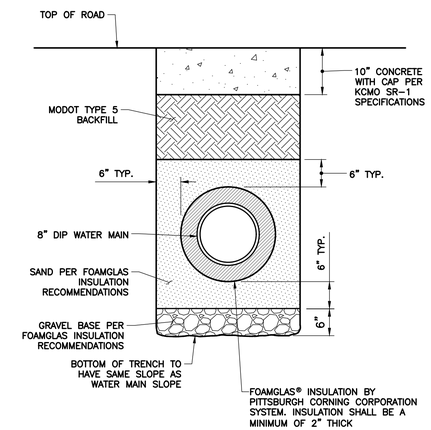

FOAMGLAS ® INSULATION SYSTEM DETAIL

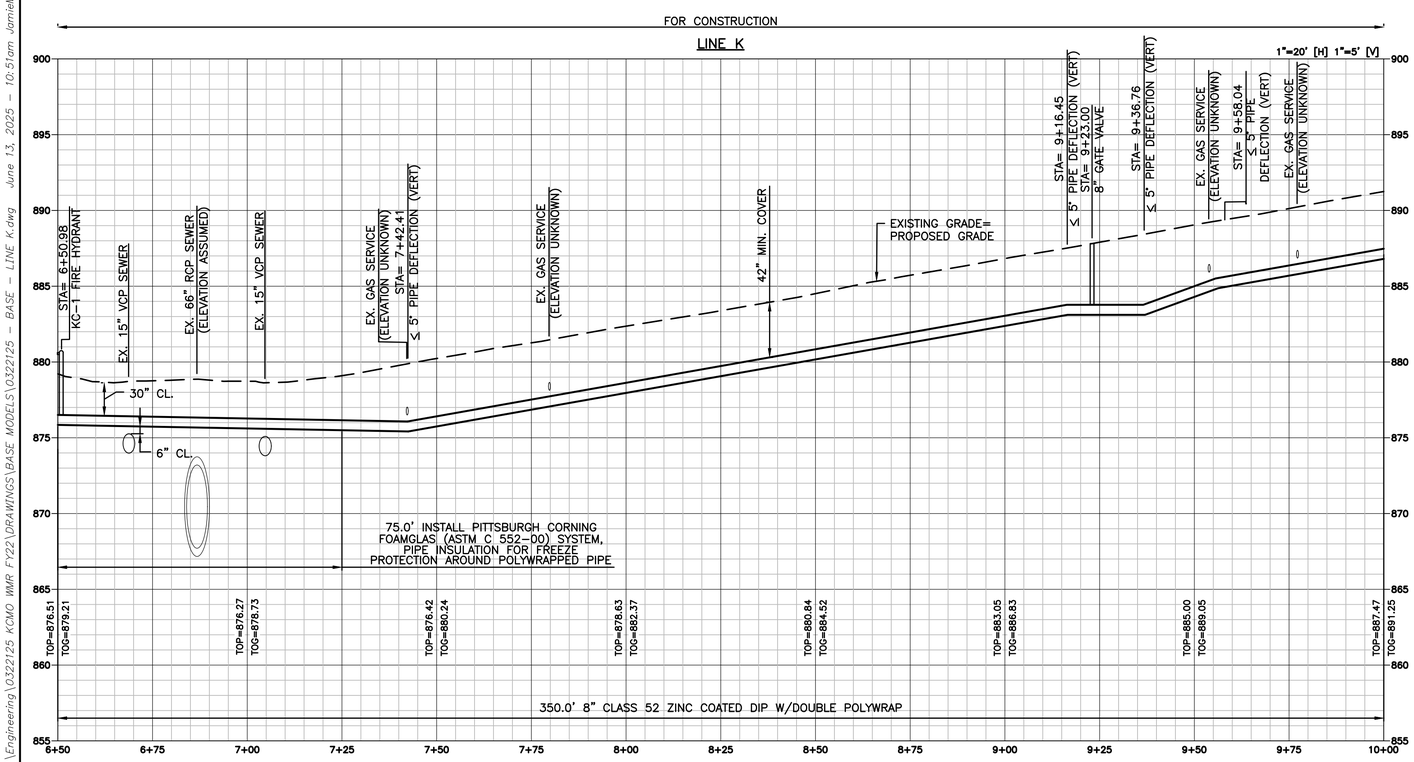

THE PROFESSIONAL WHOSE SIGNATURE AND PERSONAL SEAL APPEARS BELOW ASSUMES RESPONSIBILITY ONLY FOR WHAT APPEARS ON THIS PAGE, AND DISCLAIMS (PURSUANT TO SECTION 327.411 RSMO) ANY RESPONSIBILITY FOR ALL OTHER PLANS, SPECIFICATIONS, ESTIMATES, REPORTS, OR OTHER DOCUMENTS OR INSTRUMENTS NOT SEALED BY THE UNDERSIGNED PROFESSIONAL RELATING TO OR INTENDED TO BE USED FOR ANY PART OR PARTS OF THE PROJECT TO WHICH THIS PAGE REFERS.

PROFESSIONAL ENGINEER SEAL

STATE OF MISSOURI
MELANIE R JOLLETT
NUMBER PE-2019000282
6/13/2025
PROFESSIONAL ENGINEER

MELANIE R. JOLLETT
PE-2019000282

FOR WSD USE:

KANSAS CITY, MISSOURI WATER SERVICES DEPARTMENT

WATER MAIN REPLACEMENT
IN THE AREA OF
COLLEGE AVENUE TO NORTON AVENUE,
E. 21ST STREET TO E. 31ST STREET
KANSAS CITY, JACKSON COUNTY, MISSOURI

LINE K PLAN/PROFILE
8" WATER MAIN MERSINGTON AVENUE
E. 31ST STREET TO E. 28TH STREET

DRAWN BY:	CHECKED BY:	DATE SUBMITTED	RANGE	TOWNSHIP	SECTION
AJM	MRJ	06-13-2025	33W	49N	15

CONTRACTOR	DATE COMPLETED
–	–

CONTRACT NO.	CONTRACT DATE	MAP NO.	WM EXTENSION #	DRAWING NO.
DPS – 9662 CCN – 9663	–	C-65	–	D-20909

PROJECT NO. 80002336

SHEET 54 OF 73

LAMP RYNEARSON
9001 State Line Rd., Ste. 200
Kansas City, MO 64114
816.361.0440
LampRynearson.com
Contact Person: MELANIE R. JOLLETT
LAMP RYNEARSON - ENGINEERS
MO CERTIFICATE OF AUTHORITY NO. F01294734

L:\Engineering\0322125 KCMO WMR FY22\DRAWINGS\BASE MODELS\0322125 - BASE - LINE K.dwg June 13, 2025 - 10:51am JamieM

CITY OF FOUNTAINS
HEART OF THE NATION

KANSAS CITY
MISSOURI

REQUEST FOR INTERPRETATION

Project Number _____

Project Title _____

Contractor _____

RFI Number _____ Date _____

From: _____

To: _____

Re: _____

Spec. Sec. Ref: Paragraph: Drawing Ref: Detail:

Signed:

Response:

❑ Attachments

Response From: To: Date Transmitted:_____ Date Rec'd:_____

Signed:_____ Signed:_____
Design Professional Owner's Representative

Distribution:
- ❑ Owner
- ❑ Contractor
- ❑ Construction Manager
- ❑ Design Professional
- ❑ Consultant _____
- ❑ Other _____

CITY OF FOUNTAINS
HEART OF THE NATION
KANSAS CITY
MISSOURI

REQUEST FOR INTERPRETATION LOG

Project Number ____

Project Title ____

CONTRACTOR ____

OWNER ____

RFI No.	Issue Date	Brief Description of issue and response	Respond Date

CITY OF FOUNTAINS
HEART OF THE NATION

KANSAS CITY
MISSOURI

SUPPLEMENTAL DESIGN INSTRUCTION

Project Number _____

Project Title _____

To Contractor _____

From: _____ SDI No _____ Issue Date: _____

The Work shall be carried out in accordance with the following supplemental instructions issued in accordance with the Contract Documents without change in Contract Price or Contract Times. Proceeding with the Work in accordance with these instructions indicates your acknowledgement that there will be no change in the Contract Price or Contract Times.

Description:

❑ Attachments *(List)*

(Signature) Design Professional Date

Distribution:
- ❑ Owner
- ❑ Contractor
- ❑ Construction Manager
- ❑ Design Professional
- ❑ Consultant _____
- ❑ Other _____

CITY OF FOUNTAINS
HEART OF THE NATION

KANSAS CITY
MISSOURI

REQUEST FOR PROPOSAL

Project Number _____

Project Title _____

To Contractor _____

From: _____ RFP No _____ Issue Date: _____

Please submit an itemized proposal for changes in the Contract Price and Contract Times for proposed modifications to the Contract Documents described herein. Submit proposal within _____ days, or notify the Owner in writing of the date on which you anticipate submitting your proposal.

This is NOT a Change Order, a Work Change Directive or a direction to proceed with the work described in the proposed modifications.

Description:

❑ Attachments

Prepared by Design Professional

Prepared by Construction Manager

REQUESTED by OWNER'S Representative

Distribution:
- ❑ Owner
- ❑ Contractor
- ❑ Construction Manager
- ❑ Design Professional
- ❑ Consultant _____
- ❑ Other _____

CITY OF FOUNTAINS
HEART OF THE NATION
KANSAS CITY
MISSOURI

REQUEST FOR PROPOSAL LOG

Project Number ____

Project Title ____

CONTRACTOR ____

OWNER ____

RFP No.	Issue Date	Brief Description of Request	Respond Date	Amount	CO No.

CITY OF FOUNTAINS
HEART OF THE NATION

KANSAS CITY
MISSOURI

CHANGE ORDER

Project Number _____

Project Title _____

Change Order No: _____ Date of Issuance: _____

Ordinance No: _____ Ordinance Effective Date: _____

Contract Notice To Proceed Date: _____

To CONTRACTOR:

The Contract is changed as follows: _____

This Change Order constitutes compensation in full on behalf of the Contractor and its subcontractors and suppliers for all costs, including impact costs and extended general conditions, and markups directly and indirectly attributable to the Work changes ordered herein, for all delays related thereto and for performance of the changes within the time stated. Contractor hereby releases all claims for delay, interruption, extended general conditions, impact and cumulative impact claims for this Work.

[**Note**: Identify the specific attachments; example:"Attachment A, Additional Scope of Services." Delete **all** notes before printing final]

☐ See Attached Document(s).

[**Note:** If the CO does not change the Contract Price, use "Director" instead of "Director of Finance"]

Not valid until signed by the Director of Finance.

The original Contract Price was	$0.00
Net change by previously authorized Change Orders	$0.00
The Contract Price prior to this Change Order was	$0.00
The Contract Price will be (☐ increased by) (☐ decreased by) (☐ unchanged)	$0.00
The new Contract Price including this Change Order will be	$0.00
[Note: If revised, establish and enter new dates. If unchanged, enter current contract dates.	
If you are only changing the Final Completion date, add the following reference:	
"The Contract Time for Final Completion will be . . ."]	
The Contract Time will be (☐ increased by) (☐ decreased by) (☐ unchanged)	( ) calendar days
The date of Substantial Completion as of the date of this Change Order therefore is	Enter Date
The date of Final Completion as of the date of this Change Order therefore is	Enter Date

Project No. & Title
Change Order No.
[**Note:** Include any required additional signatures.]

DESIGN PROFESSIONAL:	**By:** **Title:**	**Date:**
CONTRACTOR:	**By:** **Title:**	**Date:**
CITY:	**By** **Title:**	**Date:**

Approved as to form: _____
Assistant City Attorney

[**Note**: If this CO does not change the Contract Price, delete the cert. of funds by Finance Director but send signed copy to Finance.]

I certify there is a balance otherwise unencumbered to the credit of the appropriation to which the above amount is chargeable, and a cash balance otherwise unencumbered in the treasury to the credit of the fund from which payment is to be made, each sufficient to meet the above obligation.

By: _____
Director of Finance Date

Distribution:
- ❑ CITY
- ❑ CONTRACTOR
- ❑ DESIGN PROFESSIONAL

REMINDER: CONTRACTOR is responsible for considering the effect this Change Order may have on its ability to meet or exceed the D/M/WBE participation amounts in its Contractor Utilization Plan (CUP) as amended by any previously approved Request for Modification/Substitution. If CONTRACTOR will not be able to achieve the approved participation amounts in performing the work included within this Change Order, or if CONTRACTOR needs to retain the services of additional D/M/WBEs not previously listed in its CUP, CONTRACTOR is advised to submit a Request for Modification/Substitution.

CITY OF FOUNTAINS
HEART OF THE NATION

KANSAS CITY
MISSOURI

WORK CHANGE DIRECTIVE

Project Number _____

Project Title _____

No.: _____ Date of Issuance: _____

TO:
(CONTRACTOR)

You are directed to proceed promptly with the following work:

Description:

Purpose of Work Change Directive:

Attachments: *(List documents supporting change)*

If the above work results on a change in the Contract Price or Contract Times, any request for a Change Order based thereon will involve one or more of the following methods of determining the effect of the change(s).

Method of determining change in Contract Price:	Method of determining change in Contract Times:
❑ Unit Prices	❑ CONTRACTOR's Records
❑ Lump Sum	❑ DESIGN PROFESSIONAL's Records
❑ As Stipulated in General Conditions	❑ City's Records
❑ Other _____	❑ Other _____

Estimated increase (decrease) in Contract Price:

$ _____

If the change involves an increase, the estimated Amount is not to be exceeded without further authorization.

Estimated increase (decrease) in Contract Times:

Substantial Completion: _____ days;

Final Completion: _____ days.

If the change involves an increase, the estimated times are not to be exceeded without further authorization.

Recommended:	Recommended:	Recommended:
DESIGN PROFESSIONAL	Construction Manager	City
By (Authorized Signature)	By (Authorized Signature)	By (Authorized Signature)

Distribution:
- ❑ City
- ❑ Contractor
- ❑ Construction Manager
- ❑ Design Professional
- ❑ Consultant
- ❑ Other

WORK CHANGE DIRECTIVE ("WCD") INSTRUCTIONS

[Note: Do not attach these instructions to the WCD Form]

A. GENERAL INFORMATION

This document was developed for use in situations involving changes in the Work which, if not processed expeditiously, might delay the Project. These changes are often initiated in the field and may affect the Contract Price or the Contract Times. This is not a Change Order, but only a directive to proceed with Work that may be included in a subsequent Change Order. If the WCD may result in an increase in the Contract Price, a contract impact cost analysis must be performed prior to issuing the WCD. Availability of funds and authorization to expend funds must be part of the analysis.

For supplemental instructions and minor changes not involving a possible change in the Contract Price or the Contract Times a Supplemental Design Instruction may be used.

B. COMPLETING THE WORK CHANGE DIRECTIVE FORM

Based on conversations between Design Professional, City's Representative and CONTRACTOR, Design Professional must complete the following:

DESCRIPTION: shall include a summary of the Work included in the WCD. Additional information may be attached to the WCD to further define the scope.

PURPOSE OF WORK CHANGE DIRECTIVE: will identify clearly if the Work included in the WCD is an addition, deletion, revision, or some combination.

ATTACHMENTS: shall identify all attachments included in and made a part of the WCD. Be certain that attachments are clearly labeled.

METHOD OF DETERMINING CHANGE, IF ANY, IN CONTRACT PRICE: Mark the method to be used in determining the final cost of Work involved and the estimated net effect on the Contract Price. If the change involves an increase in the Contract Price and the estimated amount is approached before the additional or changed Work is completed, another WCD must be issued to change the estimated price. Do not leave blank spaces or write "To be determined" (or "TBD"). An estimated dollar figure must be assigned to the Work. If the WCD is not likely to change the Contract Price, the space for estimated increase (decrease) should be marked "No Change in Price".

METHOD OF DETERMINING CHANGE, IF ANY, IN CONTRACT TIMES: Mark the method to be used in determining the change in Contract Times and the estimated increase or decrease in Contract Times. If the change involves an increase in the Contract Times and the estimated times are approached before the additional or changed Work is completed, another WCD must be issued to change the times or CONTRACTOR may stop the changed Work when the estimated times are reached. Do not leave blank spaces or write "To be determined" (or "TBD"). If the WCD is not likely to change the Contract Times, the space for estimated increase (decrease) should be marked "No Change in Times".

Once Design Professional has completed and signed the form, all copies should be sent to CITY for authorization because Design Professional does not have authority to authorize changes in Price or Times. Once authorized by CITY, a copy must be sent by Design Professional to CONTRACTOR. Price and Times may only be changed by Change Order signed by CITY, Design Professional, and CONTRACTOR. If the value of the work included in the WCD exceeds the contingency or budget available for the contract, staff must obtain written approval from the Director or his or her designee before the WCD is issued. A Director or his or her designee may not approve a WCD that will exceed City Council authorization. If the work included in the WCD is needed as a result of an emergency, staff may proceed with the issuance of the WCD without

prior written approval even if the value of the work added is expected to exceed the contract contingency balance.

Once the Work covered by this directive is completed or final cost and times are determined. CONTRACTOR must submit proper documentation for inclusion in a Change Order.

IF THIS IS A DIRECTIVE TO PROCEED WITH A CHANGE THAT MAY AFFECT THE CONTRACT PRICE OR THE CONTRACT TIMES A CHANGE ORDER, IF ANY, MUST BE PROCESSED PROMPTLY.

SECTION 01000 – GENERAL PROJECT REQUIREMENTS

PART 1 - GENERAL

1.01 SUMMARY

A. This section covers the general project requirements for all projects.

1.02 RELATED SECTIONS

A. Section 00700 – General Conditions.
B. Section 00800 – Supplementary Conditions.
C. Section 01015 – Specific Project Requirements.
D. Section 01020 – Record Documents.
E. Section 01300 – Submittals.
F. Section 01566 – Cleanup Operations.
G. Section 01570 – Temporary Erosion Control.
H. Section 01580 – Project Signs.
I. Section 01581 – Public Communications.
J. Section 02180 – Clearing and Grubbing.
K. Section 02190 – Demolition.
L. Section 02200 – Earthwork.
M. Section 02949 – Tree Protection, Removal and Replacement.

1.03 CODES AND STANDARDS

A. By reference, as applicable for the Work being performed.

1.04 SUBMITTALS

A. Submit as specified in Section 01300 – Submittals.
B. Project Communications:
   1. Progress Meeting Minutes.
C. Other:
   1. Description and location of offsite storage arrangements.
   2. Construction Site Plan.
   3. Safety Representative.

1.05 QUALITY ASSURANCE

A. The Contractor is responsible for the quality assurance and quality control of the Work.

1.06 PRODUCT DELIVERY, STORAGE AND HANDLING

A. Storage of materials and equipment shall conform to manufacturer's recommendations.
B. Storage of equipment and material shall not interfere with public access and/or safety.
C. All material shall be protected from weather. Gaskets shall be protected from exposure to sunlight.
D. Offsite Storage:
   1. Offsite storage arrangements shall be approved by the City for all materials and equipment.

2. It is the Contractor's sole responsibility to provide adequate and satisfactory security and protection.
3. Offsite storage facilities shall be bonded and accessible to City.

E. Preparation for Shipment:
1. All materials and equipment incorporated into the project shall be suitably packaged to facilitate handling and protect against damage during transit and storage.
2. Painted surfaces shall be protected against impact, abrasion, discoloration, and other damage. All painted surfaces, which are damaged prior to acceptance of materials and equipment, shall be repainted to the satisfaction of the City.
3. Pipe and fitting linings shall be protected against damage.
4. Each item, package, bundle of material, or piece of equipment shall be tagged or marked as identified in the delivery schedule or on the Shop Drawings. Complete packing lists and bills of material shall be included with each shipment.

1.07 MATERIALS SELECTION AND ACQUISITION

A. The Contractor shall not use materials or equipment removed from existing premises, except as specifically permitted by the Contract Documents. All products shall be new, never used before, unless otherwise specified.

B. Provide interchangeable components of the same manufacturer, for similar removable components, such as: T-bolts, glands, gaskets, manhole rings and covers, etc.

1.08 CONSTRUCTION SITE PLAN

A. Unless otherwise specified in Section 01015 – Specific Project Requirements, prior to the start of work, the Contractor shall submit a site plan showing the locations and dimensions of temporary facilities which include, but are not limited to, the following layouts and details:
1. Equipment and material storage area (on-site and off-site).
2. Access and haul routes.
3. Avenues of ingress/egress in fenced areas.
4. Details of the fence installation.
5. Any areas which may have to be protected to prevent the tracking of mud.
6. Indicate if a supplemental or other staging area is being utilized.
7. Show locations of safety and construction fencing, job site trailer, construction entrances, trash dumpsters, temporary sanitary facilities and parking areas for project personnel.
8. Indicate locations of concrete washout facilities.

1.09 EASEMENTS AND RIGHTS-OF-WAY

A. The City will furnish the Site in accordance with Section 00700 - General Conditions. The Contractor shall confine construction operations to the immediate vicinity of the Site shown in the Contract Documents and shall use due care in placing construction tools, equipment, excavated materials, construction materials and supplies to cause the least possible damage to property and least possible interference with public traffic.

B. On Private Property:

1. The permanent easements are as noted in the Contract Documents. No additional temporary construction easements have been obtained, unless otherwise indicated in the Contract Documents. The Contractor shall set stakes to mark the boundaries of construction easements across each private property. The stakes shall be protected and maintained until completion of the Work. After cleanup has been completed in accordance with Section 01566 – Cleanup Operations, the Contractor shall remove all construction stakes.
2. The Contractor shall not enter any private property outside the designated construction easement boundaries without written permission from the owner of the property.
3. Should it become necessary to use or occupy the land beyond the limits of the Site (as defined by Section 00700 – General Conditions), the Contractor shall obtain a written agreement with each affected property owner and tenant. Each agreement shall clearly outline the terms for which the Contractor may utilize the property and shall be fully executed by the Contractor, the property owner and the tenant (when applicable).
4. Whenever the easement is occupied by crops which will be damaged by construction operations, the Contractor shall notify the property owner sufficiently in advance so that the crops may be removed before the Work is started. The Contractor is responsible for all damage to crops outside the easement and shall make satisfactory settlement for the damage directly with the property owner.
5. Where the Work impacts fields that are leveled for irrigation or terraced, the Contractor shall relevel irrigated fields and replace all terraces to their original or better condition and to the satisfaction of the property owner.

C. Crossing State Highways:

1. The City has obtained permission from the Missouri Department of Transportation (MoDOT) for the construction of the Work. The Contractor shall secure all necessary MoDOT permits and post bond as required for construction within the limits of the MoDOT right-of-way. All work within MoDOT right-of-way shall be in conformance with MoDOT regulations. The permit must be secured before any construction is started within MoDOT right-of-way.

1.10 MAIL BOXES

A. The U.S. Post Office Department's regulations prohibit the delivery of mail to addresses where there are no mailboxes or where the mailboxes are not readily accessible because of construction excavation.

B. The Contractor's execution of the Work shall not impede delivery of the mail. The Contractor shall ensure that all mail delivery to all mail boxes is uninterrupted. All excavated material, equipment, supplies shall be kept clear of mail boxes to allow normal access for mail delivery personnel and vehicles.

C. When removal of a mail box is necessary to facilitate the Work, it shall be removed, stored and re-set to its original position and elevation. From the time a mail box is removed, it shall be re-set and the surrounding area stabilized and restored within 24 hours.

1.11 LINES AND GRADES

A. All Work shall be done to the lines, grades and elevations indicated in the Contract Documents.

B. Basic horizontal and vertical control points are provided in the Contract Documents. All additional survey, layout and measurement work shall be performed by the Contractor as a part of the Work.

C. The Contractor shall provide an experienced instrument person, competent assistants and all instruments, tools, stakes and other materials required to complete the survey, layout and measurement work.

D. The Contractor shall provide qualified personnel, materials and equipment (tools, stakes and other materials) as may be required for the following tasks needed in the Work:

1. Establish or designate control points.
2. Establish construction easement boundaries.
3. Verify survey.
4. Verify layout shown on the Contract Documents.
5. Verify and document work performed by the Contractor.

These efforts shall be included in the Contractor's bid price and performed at no additional cost to the City.

E. The Contractor shall remove and reconstruct, at no additional cost to the City, any Work that was improperly installed or improperly located.

F. See Section 01020 – Record Documents, paragraph SURVEY REQUIREMENTS for additional requirements.

1.12 CONNECTIONS TO EXISTING FACILITIES

A. Unless otherwise specified or indicated, the Contractor shall make all necessary connections to existing facilities. This includes, but is not limited to, structures, drain lines, water utilities, sewer utilities, gas utilities, communications utilities and electric utilities. In each case, the Contractor shall receive permission from the City or the owning utility prior to undertaking a connection. The Contractor shall protect facilities against deleterious substances and damage.

B. Connections to existing facilities that are in service shall be thoroughly planned in advance. All required equipment, material and labor shall be on hand at the time of undertaking the connections. Work shall proceed continuously (around the clock) to complete connections in the minimum time possible. Operation of valves or other appurtenances on existing utilities, when required, shall be by or under the direct supervision of the owning utility.

1.13 UNFAVORABLE CONSTRUCTION CONDITIONS.

A. During unfavorable weather, wet ground, or other unsuitable construction conditions, the Contractor shall confine operations to Work that will not be adversely affected by such conditions.

B. No portion of the Work shall be constructed under conditions that would adversely affect the quality or efficiency thereof, unless special means or precautions are taken by the Contractor to perform the Work in a manner acceptable to the City.

1.14 UNDERGROUND FACILITIES AND ASSOCIATED RESTORATION

A. As provided in Section 00700, paragraph 4.04 of the General Conditions, the Contractor shall perform all cutting and patching required for the Work and as may be necessary in connection with locating all underground facilities, installation of Work, uncovering Work for inspection or for the correction of defective Work.

B. The Contractor shall perform all cutting and patching required for and in connection with the Work, including but not limited to the following:
   1. Removal of improperly timed Work.
   2. Removal of samples of installed materials for testing.
   3. Alteration of existing facilities.
   4. Installation of new Work.

C. The Contractor shall provide all shoring, bracing, supports and protective devices necessary to safeguard all Work and existing facilities during cutting and patching operations. The Contractor shall not undertake any cutting or demolition that may affect the structural stability of the Work or existing facilities without City's approval.

D. Materials shall be cut and removed as required to complete the Work. Materials shall be removed in a careful manner, with no damage to adjacent facilities or materials. The Contractor shall remove all excavated materials from the site that cannot be incorporated in the Work.

E. All Work and existing facilities affected by cutting operations shall be restored with new materials, or with salvaged materials acceptable to City, to obtain a finished installation with strength, appearance and functional capacity required to match the existing area. If necessary, entire surfaces shall be patched and refinished.

F. The Contractor, at no extra cost to the City, shall replace all surface features damaged, removed or so designated to be replaced.

1.15 ENVIRONMENTAL PROTECTION

A. Laws and Regulations:
   1. The Contractor shall conform to all laws and regulations as required by Section 00700 – General Conditions, Article 6 – Contractor's Responsibilities.

B. Storm Water Runoff:
   1. Storm Water Pollution Prevention Plan (SWPPP): As required by Section 00700 – General Conditions, Article 6 – Contractor's Responsibilities.
   2. Erosion Sediment Control: See Paragraph 1.25.
   3. The Contractor shall prevent the pollution of drains and watercourses by sanitary wastes, sediment, debris and other substances resulting from construction activities. See paragraph 1.38.
   4. Dewatering: As required by Section 02200 – Earthwork.
   5. Concrete Washout Facilities: As required by Section 01566 – Cleanup Operations.

C. Air Pollution:
   1. Burning: No open burning will be permitted.
   2. Dust Control: See paragraph 1.37.

D. Other Construction Activities:
   1. Disposal of Demolition Material: As required by Section 02190 – Demolition.
   2. Disposal of Debris: Section 02180 – Clearing and Grubbing and Section 02200 – Earthwork.

3. Protection of Wetlands: As shown on the Drawings or as specified in Section 01015 – Specific Project Requirements.
4. Floodplains: As shown on the Drawings or as specified in Section 01015 – Specific Project Requirements.
5. Cleanup and Site Maintenance: As required by Section 01566 – Cleanup and Site Maintenance.

1.16 LICENSES, PERMITS, AND CERTIFICATES

A. Requirements for licenses, permits and certificates are provided in Section 00700 – General Conditions, paragraph 6.09.
B. Permitting exceptions (if any) are noted in Section 00800 – Supplementary Conditions.

1.17 APPLICABLE CODES

A. Standard specifications of the Kansas City, Missouri Department of Public Works, Parks and Recreation Department and Missouri Department of Natural Resources are, by reference, hereby made a part of this contract specifications. See Section 01015 – Specific Project Requirements for additional information.

1.18 REFERENCE STANDARDS

A. See Section 00700 – General Conditions, paragraph 3.02 for references to standards and specifications of technical societies.

1.19 PRECONSTRUCTION CONFERENCE

A. A Preconstruction Conference will be held in accordance with Article 2 of the General Conditions. The conference will be held at a mutually agreed time and location. The conference shall be attended by:
   1. Contractor and the project superintendent.
   2. Design Professional.
   3. Resident Project Representative.
   4. Representatives of City.
B. Other participants as requested by the Contractor, City, or Design Professional; such as the following:
   1. Principal Subcontractors.
   2. Representative of principal suppliers and manufacturers as appropriate.
   3. Utility Company representatives.
   4. Governmental representatives as appropriate.
   5. The Contractor shall bring to the conference the Preliminary Schedules described in Article 2 of the General Conditions (Preliminary Project Schedule, Preliminary Schedule of Values, Preliminary Schedule of Shop Drawings and Samples) and other pertinent information.
C. The purpose of the conference is to designate responsible personnel and to establish a working relationship. Matters requiring coordination will be discussed and procedures for handling such matters established. The agenda shall include, but not limited to, the following:
   1. Contractor's Preliminary Schedules.
   2. Document Management.
   3. Processing Applications for Payment.
   4. Maintaining record documents and electronic data requirements.

5. Critical Work sequencing.
6. Field decisions and Change Orders.
7. Use of premises, field office, material storage areas, security, housekeeping, and City's needs.
8. Major equipment deliveries and priorities.
9. Contractor's assignment for Safety Representative.
10. Expectations and the Contractor's plan for Environmental Protection.

D. City or Design Professional will preside at the conference, will arrange for keeping the minutes and will distribute the minutes to all persons in attendance.

1.20 PROGRESS MEETINGS

A. The Contractor shall schedule and hold progress meetings at least monthly, at other times as requested by the City or as needed by the progress of the Work. The Contractor, City, Design Professional, and all Subcontractors active on the Site shall be represented at each meeting. The Contractor may, at their discretion, request attendance of their suppliers, manufacturers or other utilities.

B. The Contractor shall preside at the meeting. Meeting minutes shall be prepared and distributed by the Contractor after review by the City or Design Professional. The purpose of the meetings will be to review the progress of the Work, maintain coordination of efforts, discuss changes in scheduling and resolve problems which may have developed on the project.

1.21 SAFETY REPRESENTIVE

A. In accordance with Section 00700 – General Conditions, Article 6 – Contractor's Responsibilities, the Contractor shall submit the name and complete contact information for the person designated as the Safety Representative for the Project.

B. In accordance with Section 01300 – Submittals, This information shall be submitted prior to the Preconstruction Conference.

C. If the Safety Representative changes during the Project, the Contractor shall designate a new person to fulfill the role and submit their name and complete contact information.

1.22 SITE ADMINISTRATION

A. The Contractor is responsible for all areas of the site used by their personnel and all Subcontractors in the performance of the Work. The Contractor will exert full control over the actions of all employees and other persons with respect to the use and preservation of property and existing facilities, except such controls as may be specifically reserved to Owner or others. The Contractor has the right to exclude from the site all persons who have no purpose related to the Work or its inspection and may require all persons on the site to observe the same regulations as their personnel.

1.23 CLEAN-UP

A. The Contractor shall conduct cleanup operations in accordance with Section 01566 – Project Cleanup.

1.24 FINAL ACCEPTANCE

A. Final Acceptance of the Work shall be in accordance with Section 00700 – General Conditions, Article 14.

1.25 EROSION AND SEDIMENT CONTROL

A. Work associated with erosion and sedimentation control shall be done in accordance with Section 01570 – Temporary Erosion and Sediment Control.

1.26 STREET LIGHTS

A. Relocation or restoration of streetlights due to construction interference shall be included in the Contractor's Bid Price. No separate measurement and payment will be made. The Contractor shall notify and coordinate street light relocations with the Public Works Department:

Street Lights Division
Phone: (816) 513-9500.

1.27 PROJECT SIGNS

A. Work associated with Project signs shall be done in accordance with Section 01580 – Project Signs.

1.28 RESTORATION

A. The Contractor shall replace all surface material and shall restore all paving, curbs, gutters, sidewalks, driveways, shrubbery, fences, sod and all other features disturbed to a condition of equal to or better than before the work began, furnishing all material, labor and equipment incidental thereto.

1.29 WATER

A. The City will furnish, without charge, all water necessary for the Work (i.e., filling, flushing, testing and disinfecting completed water lines). The Contractor shall make arrangements with the City for all water used.
B. Use of the City's water facilities shall be at the direction of the Water Services Department so that water is not wasted and service to customers is not impaired.
C. Any water furnished by the City must be obtained from an existing City main.
D. The Contractor shall use a Reduced Pressure Zone (R.P.Z.) Backflow Preventer and meter when connected to the City's water system. The Contractor shall contact the Kansas City Fire Department (KCFD) at (816) 513-4645 to purchase a hydrant meter permit. After securing a hydrant meter permit from KCFD, the Contractor shall present the permit to the Consumer Services desk located at Water Services Department headquarters, 4800 E. 63rd Street, KCMO. The Contractor shall apply for and pay Consumer Services the refundable security deposit. If approved, the Contractor shall contact the Water Services Backflow Department at (816) 513-4797 to schedule the installation of the R.P.Z./Meter (hydrant meter). The Contractor shall provide the location of the hydrant where the R.P.Z./Meter is to be installed. The Contractor shall contact the Backflow Department to have the R.P.Z./Meter moved or returned to Water Services. Jetting and Vacuum trucks with approved backflow prevention devices or air gap separation are not required to utilize a R.P.Z. backflow preventer; however, a meter to track water usage shall be used at all the times. The Jetter/Vac Contractor shall contact the Water Services Backflow Department for issuance of the meter and pay the associated refundable security deposit. In all cases, the Contractor is solely responsible for any and all damage to the equipment issued by the Water Services Backflow Department. The cost to repair the damage or the cost of complete replacement of the unit shall be deducted from the security deposit.

E. All costs for labor, material, equipment and services needed to obtain water for construction purposes shall be included in the Bid. No separate measurement or payment will be made to make connections.

1.30 OPERATION OF EXISTING VALVES

A. The Contractor shall not operate any valves on the City's system without direct supervision from a Water Services Department representative.

B. If the Contractor needs valves operated, the request shall be made at least seven (7) work days in advance to Water Services for such operation, also giving notice to any affected customers/properties in accordance with the notification requirements outlined in Section 01581 – Public Communications.

C. The hydrant branch valves may be operated in the presence of a Water Services Department representative with no official advance notification.

D. All fire hydrants and water valves shall be kept free from obstruction and available for use at all times.

1.31 BARRICADES AND LIGHTS

A. All streets, roads, highways and other public thoroughfares which are closed to traffic shall be protected by effective barricades and acceptable warning signs. Barricades shall be located per the approved traffic control plan and associated permit.

B. All trenches and other excavations shall be covered and shall have suitable barricades, signs and lights to provide adequate protection to the public. Obstructions such as material piles and equipment shall be provided with similar warning signs and lights.

C. All barricades and obstructions shall be illuminated with warning lights from sunset to sunrise. Material storage and execution of the Work on or alongside public streets and highways shall cause the minimum obstruction and inconvenience to the traveling public.

D. All barricades, signs, lights and other protective devices shall be installed and maintained in conformity with applicable statutory requirements and as required by the authority having jurisdiction; such as, Work within railroad right-of-way, highway right-of-way, etc.

1.32 EXISTING FENCING

A. All existing fences affected by the Work shall be maintained by the Contractor until completion of the Work. Fences which interfere with construction operations shall not be relocated or dismantled until written permission is obtained from the owner of the fence and the period the fence may be left relocated or dismantled has been agreed upon.

B. Where fences must be maintained across the construction easement, adequate gates shall be installed. Gates shall be kept closed and locked at all times when not in use.

C. On completion of the Work across any tract of land, the Contractor shall restore all fences to their original location and to their original or better condition.

1.33 SAFETY FENCING

A. Provide fencing along the construction site at all open excavations and tunnels to control access by unauthorized people.

B. The safety fencing must be a high visibility orange colored, high density polyethylene grid or approved equal, a minimum of 48 inches high and maximum mesh size of 2 inches, supported and tightly secured to steel posts located on maximum 10-foot centers, constructed at the approved location.
C. Remove the fence from the work site upon completion of the Work.

1.34 PROTECTION OF PUBLIC AND PRIVATE PROPERTY

A. The Contractor shall protect, shore, brace, support, and maintain all underground pipes, conduits, drains and other underground construction uncovered or otherwise affected by the construction operations.
B. All pavement, surfacing, driveways, curbs, gutters, sidewalks, buildings, utility poles, guy wires, fences, and all other features and structures affected by construction operations, together with all sod and shrubs in yards, parkways, medians and green spaces, shall be restored to their original condition, whether within or outside the right-of-way or easement. All replacements shall be made with new materials.
C. Work associated with tree protection, removal and replacement shall be done in accordance with Section 02949 – Tree Protection, Removal and Replacement.

1.35 DAMAGE TO EXISTING PROPERTY

A. The Contractor is solely responsible for any damage to existing features, structures, Work, materials, or equipment because of their operations and shall repair or replace any damaged features, structures, Work, materials, or equipment to the satisfaction of the City and at no additional cost to the City.
B. The Contractor shall protect all existing structures and property from damage and shall provide bracing, shoring, or other work necessary for such protection.
C. The Contractor is responsible for all damage to streets, roads, curbs, sidewalks, highways, shoulders, ditches, embankments, culverts, bridges, or other public or private property, which may be caused by transporting equipment, materials, or personnel to or from the Work. The Contractor shall make satisfactory and acceptable arrangements with the agency having jurisdiction over the damaged property concerning its repair or replacement.

1.36 NOISE CONTROL

A. The Contractor shall conduct construction operations as described herein and in compliance with the City of Kansas City, Missouri Code of Ordinances, Chapter 46 – NOISE CONTROL.
B. The Contractor shall take all reasonable measures to avoid unnecessary noise. Such measures shall be appropriate for the normal ambient sound levels in the area during working hours. All construction machinery and vehicles shall be equipped with practical sound-muffling devices and operated in a manner to cause the least noise, consistent with the efficient performance of the Work.
C. During construction activities on or adjacent to occupied buildings and when appropriate, the Contractor shall erect screens or barriers effective in reducing noise in the building and shall conduct their operations to avoid unnecessary noise which might interfere with the activities of the building occupants.

D. All work including, but not limited to, excavation, demolition, alteration, or repair being performed in or adjacent to a residential area other than between the hours of 7:00 a.m. and 6:00 p.m. on weekdays, except in the case of urgent necessity in the interest of public safety, shall require written permission from the Water Services Department of the City of Kansas City, Missouri.

1.37 DUST CONTROL

A. The Contractor shall control dust in accordance with Section 01566 – Cleanup Operations, paragraph DUST CONTROL. The Contractor shall take all reasonable measures to prevent unnecessary dust. Earth surfaces subject to dusting shall be kept moist with water or by the approved application of an approved chemical suppressant. When practicable, dusty materials in piles or in transit shall be covered to prevent blowing.

B. Buildings or operating facilities which may be affected adversely by dust shall be adequately protected from dust. Existing or new machinery, motors, instrument panels, or similar equipment shall be protected by suitable dust screens. Proper ventilation shall be included with dust screens.

1.38 POLLUTION CONTROL

A. The Contractor shall prevent the pollution of drains and watercourses by sanitary wastes, sediment, debris or other substances resulting from the construction activities. No sanitary wastes will be permitted to enter any drain or watercourse other than sanitary sewers. No sediment, debris, or other substance will be permitted to enter sanitary sewers and all reasonable measures will be taken to prevent such materials from entering any drain or watercourse. See requirements of 01570 – Temporary Erosion & Sediment Control and the Storm Water Pollution Prevention Plan (SWPPP)

1.39 SECURITY

A. The Contractor is solely responsible for security and protection of the site. This includes protecting all Work, materials, equipment, existing facilities and all temporary facilities against theft, vandals and access by unauthorized persons.

B. No claim shall be made against the City by reason of an act of an employee or trespasser. The Contractor shall make good on all damage and theft of property resulting from the Contractor's failure to provide adequate security measures.

1.40 PARKING

A. The Contractor shall provide and maintain suitable parking areas for the use of all City personnel, construction workers and others performing work or furnishing services in connection with the Project. Suitable parking is required to avoid the need for parking personal vehicles where they may interfere with traffic, City's operations, or construction activities.

1.41 PIPELINE MARKERS

A. Pipeline markers as shown in Construction Detail Drawing No. 01000-1 shall be installed at the locations shown on the Drawings.

B. Pipeline markers shall be installed along water main alignments that are not within mowed turf areas, shall be spaced no greater than 500 feet apart and shall be placed at all horizontal bends.

C. Contractor shall field verify Stations and Locations for pipeline markers to comply with actual construction. The Contractor shall coordinate labeling with the City/Design Professional prior to fabricating the marker plates. The Contractor shall submit as required in Section 01300 – Submittals.

PART 2 - PRODUCTS

Not used.

PART 3 - EXECUTION

Not used.

Drawing No. 01000-1 on the following page.

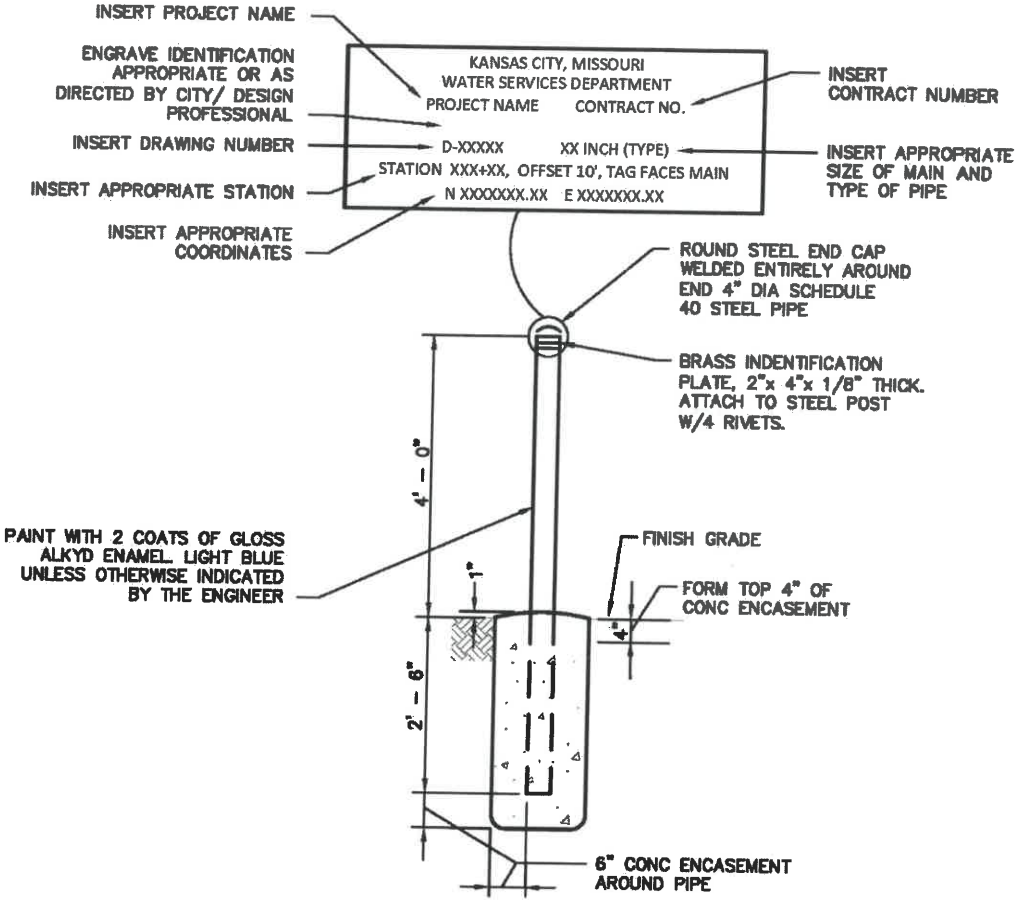

NOTES:

1. PIPELINE MARKERS AS SHOWN IN THIS DETAIL SHALL BE INSTALLED AT THE LOCATIONS SHOWN ON THE DRAWINGS.
2. CONTRACTOR SHALL VERIFY STATIONS AND LOCATIONS FOR PIPELINE MARKERS TO COMPLY WITH ACTUAL CONSTRUCTION, AND SHALL COORDINATE LABELING WITH CITY/ DESIGN PROFESSIONAL PRIOR TO FABRICATING AND INSTALLING PIPELINE MARKERS. SUBMIT AS REQUIRED IN SECTION 01300–SUBMITTALS.

PIPELINE MARKER

WATER SERVICES
CITY OF KANSAS CITY, MISSOURI
DRAWING NO. 01000-1

DEVELOPED BY: TECHNICAL ADVISORY COMMITTEE
APPROVED BY:
DATE: 9/02/2021

1 OF 1

END OF SECTION

SECTION 01015 – SPECIFIC PROJECT REQUIREMENTS

PART 1 - GENERAL

1.01 SUMMARY

A. This section covers the modification of specifications for this Project. Any specification that is modified for this Project is listed in Part 3 of this Section by Division. If the Division or specification is not included in this Section, then the Project specification in the Division remains intact.

1.02 SPECIFICATION MODIFICATIONS

A. In the event Section 01015 – Specific Project Requirements conflicts with other project specifications of Divisions 01 through 06; the requirements of this Section shall govern.

1.03 RELATED SECTIONS

A. Section 01000 – General Project Requirements
B. Section 01020 – Record Documents
C. Section 01300 – Submittals
D. Section 01320 – Construction Progress Documentation
E. Section 01322 – Photographic Documentation
F. Section 01335 – Document Management
G. Section 01500 – Temporary Facilities
H. Section 01570 – Temporary Erosion Control
I. Section 01580 – Project Signs
J. Section 01581 – Public Communications
K. Section 01700 – Traffic Control
L. Section 02250 – Trenching, Pipe Embedment and Backfill
M. Section 02575 – Surface Restoration
N. Section 02675 – Flushing, Testing and Disinfection of Water Mains
O. Section 02618 – Ductile Iron Pipe for Water Mains
P. Section 02930 – Seeding
Q. Section 02931 – Sodding

1.04 QUALITY ASSURANCE

A. The Contractor is responsible for the quality assurance and quality control of the Work.

1.05 INFORMATION PROVIDED BY THE CITY

A. As provided in the Contract Documents.

1.06 DESCRIPTION OF PROJECT

A. The work to be performed under these Contract Documents shall be consistent with Section 00700 - General Conditions in the construction, installation, and completion of all work required in connection with the Water Main Replacement in the Area of College Avenue to Norton Avenue from E 21st Street to E 31st Street in Kansas City, Jackson County, Missouri.

B. The work to be performed under these Construction Contract Documents is generally described as follows:

The Project in general consists of replacing approximately 11,210 LF (Base Bid) of break-prone and obsolete water mains and appurtenances and providing other distribution system improvements within the project limits, generally defined as College Avenue to Norton Avenue from E 21st Street to E 31st Street. The specific mains to be replaced and other distribution system improvements within the project limits consist of the following:

1. Replace 429 LF of 12-inch CIP water main with 12-inch DIP along Bales Avenue from E 21st Street to E 22nd Street (Line A)
2. Replace 354 LF of 6-inch CIP water main with 12-inch DIP along E 21st Street from Indiana Avenue to Bales Avenue (Line B)
3. Replace 3,446 LF of 10-inch CIP water main with 12-inch DIP along Indiana Avenue from E 27th Street to east of E 21st Street (Line C)
4. Replace 436 LF of 6-inch CIP water main with 8-inch DIP along E 24th Street from Indiana Avenue to Bales Avenue (Line D)
5. Replace 633 LF of 6-inch CIP water main with 8-inch DIP along E 24th Terrace from Indiana Avenue to dead-end west of I-70 (Line E)
6. Replace 461 LF of 6-inch CIP water main with 8-inch DIP along E 25th Street from Indiana Avenue to Bales Avenue (Line F)
7. Replace 711 LF of 6-inch CIP water main with 8-inch DIP along E 26th Street from College Avenue to Bales Avenue (Line G)
8. Replace 79 LF of 6-inch CIP water main with 8-inch DIP along College Avenue at E 26th Street (Line H)
9. Replace 1,560 LF of 6-inch CIP water main with 8-inch DIP along Mersington Avenue from E 31st Street to E 28th Street (Line K)
10. Replace 2,013 LF of 4-inch CIP water main with 8-inch DIP along Myrtle Avenue from E 31st Street to west of E 28th Street (Line L)
11. Replace 1,088 LF of 6-inch CIP water main with 8-inch DIP along Norton Avenue from E 31st Street to E 29th Street (Line M)

Continued on next page.

Alternate A:

1. Replace 525 LF of 12-inch CIP water main with 12-inch DIP along Bales Avenue from E 22nd Street to E 23rd Street (approx.)

Base Bid – footage is approximately 11,210 LF
Alternate A – footage is approximately 525 LF
Total Footage is approximately 11,735 LF

1.07 CONTRACT DRAWINGS

A. The Drawings on which the Contract is to be based are entitled Water Main Replacement in the Area of College Avenue to Norton Avenue from E 21st Street to E 31st Street in Kansas City, Jackson County, Missouri. The Drawings are to be supplemented by additional shop and dimension drawings of materials and equipment and other drawings where specified. The following drawings are included in the Drawings:

Drawing No.(s)	Sheet Number	Title
D – 20909	1	COVER SHEET
D – 20909	2	GENERAL NOTES, PROJECT NOTES & LEGEND
D – 20909	3-4	CONTROL POINTS AND BENCHMARK SHEETS
D – 20909	5-6	GENERAL LAYOUT
D – 20909	7-8	STORM & SANITARY SEWER TABLES.
D – 20909	9-11	PLAN & PROFILES BID ALTERNATE -A
D – 20909	12-66	PLAN & PROFILES
D – 20909	67-73	TRAFFIC CONTROL SHEETS

1.08 MATERIALS FURNISHED BY THE CITY

A. The City will provide the following equipment or materials to be used for the Project. All materials required to complete the Work in accordance with the Contract Documents shall be furnished, installed, and paid for by the Contractor.

1. No equipment or materials will be provided by the City.

1.09 SEQUENCE OF WORK

A. Contractor shall proceed with the work in the following general sequence for each segment of work.

1. Where excavation is required, call 1-800-DIGRITE or 811 to confirm location of underground utilities in accordance with Missouri One Call System requirements.

2. Obtain all required permits to construct the work including but not limited to Public Works traffic control, excavation, pavement degradation, and excavation permits; Parks & Recreation permits for work in boulevards or parkways; and Missouri Department of Transportation (MoDOT) permits for work in MoDOT right of way.

3. Provide Initial Notification of Construction to property owners / residents along the segment of work as further specified herein.

4. Set up and maintain traffic control devices and signage as approved by Public Works for the segment of work.

5. If required by Section 01570 – Temporary Erosion Control, prepare and execute a Stormwater Pollution Protection Plan (SWPPP) and maintain copy on site. Implement best management practices (BMPs) and appropriate stabilization methods to control erosion and prevent stormwater runoff from disturbed areas.

6. Locate by vacuum excavation or other excavation methods existing underground utilities in the area of the work as necessary to avoid a conflict with the proposed work or damage to the utility.

7. Deliver materials to the site and store as further specified herein.

8. Excavate and install new water main and appurtenances as shown on the plans and as further specified herein while maintaining existing water mains in service.

9. Take measurements of the work installed and prepare field-marked drawings (red line markups) as the work progresses. Obtain survey points of the work as required for preparation of record drawings.

10. Prepare and submit to Water Services shut requests to construct temporary connections and provide required notices to customers of scheduled water shut offs.

11. Construct temporary connections to the new water mains from the existing distribution system and isolated by at least two valves. Fill and flush new water mains. Pressure test and disinfect new water mains and appurtenances as further specified herein.

12. Transfer water services from existing to the new water mains. Relocate water meters to exterior locations as shown on the plans. Remove existing meters from inside facilities.

13. Prepare and submit to Water Services a shut requests to construct permanent connections and provide required notices to customers of scheduled water shut offs.

14. Construct permanent connections as shown on the plans and abandon the existing water mains and appurtenances as further specified herein.

15. Restore street pavements, curb, sidewalks, driveways and all other disturbed areas. Maintain BMPs to control soil erosion and runoff until permanent stabilization is achieved.

1.10 LIMTATIONS ON SEQUENCE OF WORK

A. Water Main Construction must be sequenced as follows to reduce the amount of disruption to the Water Services' customers. Exceptions must be approved in writing by Water Services.

1. If the Contractor has only one crew working on the construction project, construction cannot commence on a second designated water main (i.e. Line A, Line B, Line C, etc.) on the construction plans until all work has been completed on the designated water main currently under construction, which includes laying pipe, performing the required testing on the water main and receiving satisfactory test results, transferring services in this designated water main segment, and cleaning up the area of all debris and excess materials and grading the disturbed soil such that the main area is ready for seed or sod. If seeding and sodding cannot be accomplished due to the time of year based on the contract documents, the Contractor must install and maintain erosion control and hydro-mulch until seeding or sodding can be established in disturbed areas.

2. If the Contractor has multiple crews working on the construction project, one crew may commence laying pipe on a second designed water main while the other crew is completing work on the first designated water main under construction. However, no additional work can occur on a subsequent designated water main until all work on the first designated water main under construction has been completed as described in Subparagraph A.1.above.

3. Contractor shall submit a work plan for any temporary service for replace-in-place method of construction if method specified in the Plans.

Review and approval of the work plan by the City is required prior to the commencement of pipe installation.

PART 2 – PRODUCTS

Not Used.

PART 3 – EXECUTION

3.01 DIVISION 1 – GENERAL REQUIREMENTS, SPECIFICATION MODIFICATIONS

A. Division 1 – General Requirements is modified as follows:

B. Section 01000 – General Project Requirements is modified as follows:

1. In accordance with paragraph SUBMITTALS, the Contractor is not required to provide a Construction Site Plan.

2. Add Paragraphs B, C, and D to Section 01000, Subsection 1.17 – CONFORMING TO CONSTRUCTION DRAWINGS as follows:

"B. In accordance with Section 01000, Subsection 1.17 - APPLICABLE CODES, the following Public Works Department standard specifications are incorporated into this set of Contract Documents by reference:

Design criteria and construction specification sections of the APWA as adopted by the Public Works Department and all supplements or replacement sheets with the exception that all paragraphs relating to Measurement and Payment, Method of Payment, and Basis of Payment do not apply to this Project:
APWA 2100 – Grading and Site Preparation
APWA 2200 – Paving
APWA 2300 - Incidental Construction

C. In accordance with Section 01000, Subsection 1.17 - APPLICABLE CODES, the following Public Works Department standard details are incorporated into this set of Contract Documents by reference:
C – Curbs
D-1 – Concrete Driveways
D-2 – Concrete Reconstruction Driveways
D-US – Driveways, Unimproved Streets
SR-1 Street Cut Restoration
SW-1 – Curb Ramp Template (17 pages)

D. In accordance with Section 01000, Subsection 1.17 - APPLICABLE CODES, the following Parks and Recreation Department standard details are incorporated into this set of Contract Documents by reference:

C – Curb
C1 – Concrete Curb and Gutter
CR – Rollback Curb & Gutter
CJ – Concrete Joint
SC – Commercial Sidewalk
ARB-ADA Curb Ramp Type B
DC – Commercial Driveway
DR - Residential Driveway"

3. Delete Paragraph 1.30 B. OPERATION OF EXISTING VALVES in Section 01000 and replace with the following Paragraph 1.30 B:

"1.30 B. If the Contractor needs water valves operated for either a test shut or a main shut, the Contractor shall prepare and submit a written shut request in proper form to Water Services at least seven (7) calendar days in advance of the proposed valve operation. A temporary test shut must be separately requested, scheduled, and conducted to ensure a tight shut for the main shut. Contractor shall assist with test shuts and main shuts as requested by City, including but not limited to, preparing and distributing shut notices and operation of valves under the direct supervision of the City. Contractor shall be responsible for providing notice of the temporary test shut and main shut to all affected customers/properties in accordance with the notification requirements outlined in Section 01581 – Public Communications. The Contractor must follow the City's standard procedures when filling and flushing distribution mains including but not limited to, notifying City's Dispatch Office."

4. Add Section 01000, Subsection 1.41 – CONNECTIONS TO EXISTING MAINS with Paragraphs A through F as follows:

"1.41 CONNECTIONS TO EXISTING MAINS

A. The Contractor shall furnish and install all fittings necessary for connections to the existing water mains at the locations shown on the Plans. No connections to existing mains shall be started without prior approval of the City. Scheduling of water main shuts and connections to existing water main shall be at the discretion of Water Services.

B. It shall be the responsibility of the Contractor to make any and all excavations and backfill as required, and furnish all labor, equipment, and material necessary to complete the connections as detailed on the Plans. The Contractor shall maintain, barricade, repair, restore, and protect all excavations and disturbed areas. All bends, tees, etc., shall be provided with adequate backing by the Contractor as required in Section 02669 – Thrust Restraints of the Standards and Specifications.

C. All water mains must be maintained in service except for shuts of limited duration. When mains are taken out of service, Contractor shall work continuously to bring the existing or new replacement mains back into service as quickly as possible. Contractor shall provide multiple crews complete with equipment to construct connections where necessary to limit valve shut durations to less than 4 hours.

D. All existing water transmission mains, 16-inch in diameter or larger, cannot be taken out of service at any time during the peak water demand season of May 15th to September 15th.

E. Temporary Service

1. The Contractor shall notify all customers affected by the Work of making the connections as to the time of day and the span of time required to make said connections. When the closing of a valve to make the connections will terminate water service to a customer(s), the Contractor shall arrange to supply temporary service and schedule the time which is most convenient to the customer(s) for making the connection. No extra compensation will be allowed for providing temporary service or making the connection at a time other than normal working hours.

2. When temporary water supply is not possible, valve shut duration shall be less than 4 hours.

F. Contractor must be prepared for and be able to handle moderate leakage when making connections to the existing water distribution system. Contractor must make provisions for dewatering existing trenches and piping to enable construction work to proceed. Should temporary taps or drain valves be required on existing piping, Contractor shall provide and install as required subject to the approval of the City. Moderate leakage, for the purposes of this paragraph, shall be defined as a valve or valves that leaks no more than what can be handled by

a single 3-inch trash or dewatering pump. The Contractor shall always include in his base bid the cost of providing a dewatering pump at each excavation location for connections, including all fuel and consumables required to run said pump for the duration of the connection work. City shall not be liable for delay damages or claims as a result of leaking or inoperable valves."

5. Add Section 01000, Subsection 1.42 – WATER SERVICES AND RECONNECTIONS with Paragraphs A through I as follows:

"1.42 WATER SERVICES AND RECONNECTIONS

A. All existing service lines connected to existing water mains to be abandoned shall be disconnected from said mains and reconnected to the new mains by the Contractor. The Contractor shall furnish all material, equipment, and labor for the complete installation in accordance with the KCMO Rules & Regulations for Water Service Lines. All service line reconnections will be made by the Contractor including all main taps. No connection to the new mains will be permitted until the new mains have been accepted by Water Services and put in service.

B. Service taps to the main shall be made in accordance with KCMO Rules & Regulations for Water Service Lines with the following exception:

Delete Section 4.02(a) and replace with the following: "Tapping shall be performed by the Contractor".

C. The connection of the tap service line to the corporation stop shall be made by means of a dielectric flared fitting or approved dielectric compression coupling.

D. No corporation tap shall be larger than 1" in diameter. On all service piping larger than 1" provide a branch tee on the new main as shown on the plans and a reducer as required for the connection. Service lines larger than 2" in diameter shall be ductile iron.

E. Contractor shall replace all service lines (2" and smaller) with new Type "K" copper with like size (¾" minimum) from the new main to a location shown on the Drawings (to either the new curb stop, to a splice location to the existing service line, or to the meter pit), or as otherwise directed by Water Services. If the existing meter pit is to be relocated or replaced in place, or a meter removed from the interior of the building to an outside meter pit, the new copper

service line must extend from the new main to the new meter pit as shown on the Drawings. A new curb stop assembly with valve box shall be installed at a location indicated on the Drawings or as directed by Water Services. Existing copper service connections may be spliced if shown on the Drawings to be spliced or as directed by Water Services with an approved fitting or coupling, provided the fitting or coupling is not located under pavement.

F. Installation of water service lines beneath streets and driveways shall be done by drilling or approved trenchless methods unless rock or other site conditions require open cut excavations.

G. After the reconnection, the immediate area will be prepared for surface restoration. Cleanup must be completed on all water service transfers at the end of each work day. No open excavation for service transfers will be allowed during non-working hours unless specifically approved by the City.

H. Existing water meters and tiles or curb stops, located in a position that will require their adjustment either vertically or horizontally because of proposed construction shall be relocated or adjusted by the Contractor. All materials used for the relocation or adjustment shall be new. No additional payment to the Contractor shall be allowed for any water service and meter adjustments.

I. When the existing water meter is located inside a building the Contractor shall gain entrance as agreed to by the owner/resident and remove the interior meter and appurtenances as further described herein.

1. The Contractor shall notify the owner/resident in writing to schedule an appointment to enter the building to remove the existing interior meter. The City will provide the Contractor a template of the letter for modification.

2. After installation of the new meter tile with appurtenances and the transfer of the water service line to the new main as shown on the plans, the Contractor shall enter the building as scheduled with the property owner/resident and remove the meter, meter yoke, and meter transmitting unit (MTU). In removing the MTU, the Contractor shall cut the wire to the MTU at the water meter and **not** at the MTU, preserving as much wire attached to the MTU as feasible for its reconnection in the meter tile. The gap in interior piping left by the removal of the water meter, meter yoke, and appurtenances shall be replaced with new

plumbing (Type K Copper) with approved couplings. All existing interior water shut off valves shall be preserved and remain in place.

3. Contractor shall coordinate with the City for installation of a new water meter and MTU in the meter tile. The Contractor shall place the MTU with its wire attached in the new meter tile for re-installation by Water Services. The existing water meter shall be salvaged by the Contractor for the City. At the direction of Water Services, the Contractor shall either re-install the existing meter in the meter tile or provide a temporary jumper in the meter yoke assembly to continue to supply water to the customer until a new water meter is installed.

4. All work inside the building shall be performed by a licensed plumber and paid for by the Contractor. Contractor shall obtain a document signed by the owner/resident accepting the completed private plumbing work within the residence."

6. Add Section 01000, Subsection 1.43 – ABANDONED WATER MAINS with Paragraphs A through C as follows:

"1.43. ABANDONED WATER MAINS

A. Water service lines connected to mains being abandoned shall be reconnected to new mains in accordance with the Rules and Regulations for Water Service Lines, unless shown otherwise. The end of all abandoned water mains shall be plugged with sufficient concrete to prevent backfill material from entering the pipe.

B. Covers, lids, and standpipes on all abandoned valves shall be removed to at least two feet (2') below grade and the area shall be properly backfilled and restored in accordance with the specifications.

C. Existing fire hydrants that are removed shall be salvaged by the Contractor for the City and returned to the Water Services store yard at 2409 East 18th Street."

C. Section 01020 – Record Documents

1. In accordance with Section 01020, Subsection 1.04 – CODES AND STANDARDS, Record Documents shall conform to the KCWSD CAD Design Standards and Specifications. The document can also be accessed from the following website:

https://www.kcwater.us/wp-content/uploads/2024/08/KCWSD-Cad-Standards-816-24.pdf

2. Add the following to Section 01020, Paragraph 3.04D – CONFORMING TO CONSTRUCTION DRAWINGS:
"The Contractor shall be responsible for developing Conforming to Construction Drawings. CAD files to be provided to the Contractor for preparation of Conforming to Construction Record Drawings shall be in AutoCAD.dwg format (2018 or more recent), Autodesk Civil 3D (2018 or more recent), or AutoCAD Map 3D (2018 or more recent)."

D. Section 01300 – Submittals

1. Add the following Subparagraph 2 to Section 01300, Subsection 1.05 F – SUBMITTALS REQUIRED FOR THE PRECONSTRUCTION CONFERENCE as follows:

"2. The following are the items requiring submittals by the Contractor for the pre-construction conference. These submittals need to be submitted through E-Builder in the 'Submittals' tab. Submittals shall indicate, but not be limited to, name of manufacturer, shop drawings, physical & chemical testing & certification, appurtenances used, etc.:

a. Water Project Submittals:
   i. Ductile iron pipe, CL52 & CL54 with type of joint used.
   ii. Polyethylene encasement.
   iii. Mechanical Joint fittings (tees, cross, reducers, bends, plugs, anchor couples, etc.).
   iv. Tapping sleeve and valve.
   v. Restrained joints used (Mega-Lug, anchored coupling, push-on).
   vi. Gate and butterfly valves with base, lid and cover used in both traffic and non-traffic areas.
   vii. Solid sleeve.
   viii. Asphalt.
   ix. Fire Hydrants.
   x. Concrete mix (backing block, straddle block, encasement, etc.).
   xi. Encasement.
   xii. Casing Pipe w/ spacers and end seals.
   xiii. Service Transfers:
      (i) Corporation stops.
      (ii) Dielectric insulating assembly.
      (iii) Copper service piping.
      (iv) Curb stop with base, box and lid/cover.
      (v) Services coupling (new to existing).
      (vi) Meter Tiles with Covers.
      (vii) Meter Yoke and Appurtenances.

xiv. Testing and Disinfection:
   (i) Pressure testing procedure.
   (ii) Chlorination procedure.
   (iii) MSDS form.
   (iv) Testing Lab.
xv. Air Release Valves and Vault
xvi. Erosion Control:
   (i) Gutter Sock.
   (ii) Silt Fence.
   (iii) Other Roller Erosion Control Products.
xvii. Bedding & Backfill Material.
xviii. Sod/Seeding Documentation and Certification.
xix. Construction Schedule."

2. Add Section 01300, Subsection 1.06 – SCHEDULE OF VALUES with Paragraphs A and B as follows:

"1.06 - SCHEDULE OF VALUES

A. As provided in the General Conditions, and after review of the preliminary progress schedule at the preconstruction conference and before submission of the first Application for Payment, Contractor shall prepare and submit to City for review a Schedule of Values for the construction phases of the project. The Schedule of Values, showing the estimated quantity and value of each kind of work must be approved by City before any Application for Payment is prepared.

B. The Schedule of Values for the construction phase portion of the project shall include at least the following items, adjusted for size and type where indicated:"

ITEM	DESCRIPTION	UNIT	UNIT COST	TOTAL COST
1.	Mobilization	LS		
2.	Permits	LS		
3.	Traffic Control	LS		
4.	SWPPP & Erosion Control	LS		
5	Pre-Construction Photographs	LS		
6.	Construction Staking	LS		
7.	Transmission Water Main DIP Class 54 Waterline w/Excavation & Backfill – Specify size(s)	LF		
8.	Distribution Water Main DIP Class 52 Waterline w/Excavation & Backfill – Specify size(s)	LF		

ITEM	DESCRIPTION	UNIT	UNIT COST	TOTAL COST
9.	Bends w/ Backing Blocks – Specify size(s) and degree(s)	EA		
10.	Sleeves and Reducers – Specify size(s)	EA		
11.	Tees w/ Backing Block – Specify size(s)	EA		
12.	Valves – Specify size(s)	EA		
13.	Straddle Blocks – Specify size(s) of Water Main	EA		
14.	Water Service Line Transfers – Specify size(s)	EA		
15.	Curb Stop Installation	EA		
16.	Meter Relocation	EA		
17.	Sewer Crossing	EA		
18.	Gas Crossing	EA		
19.	Fire Hydrant	EA		
20.	Flushing Assembly	EA		
21.	Air Release Valve (specify size) with Vault	EA		
22.	Street Pavement Removal & Replacement	SF		
23.	Driveway Removal & Replacement	SF		
24.	Sidewalk and Curb Removal & Replacement	SF		
25.	Testing and Disinfection (by Segment)	EA		
26.	Connections to Existing Mains (by Segment)	EA		
27.	Seeding	SF		
28.	Sodding	SF		
30.	Landscaping	LS		
31.	Demobilizations / Cleanup	LS		
32.	Allowance	LS		
33.	"As Built" Drawings & Project Record Documents	LS		

3. In accordance with Section 01300, Subsection 1.03 – GENERAL INFORMATION, Paragraph F, the following is a list documents that are to be submitted in electronic and hard copy formats:

    a. Preliminary Project Schedule, submit one (1) copy.

    b. Project Baseline Schedule, submit one (1) copy.

    c. Progress Schedules, submit one (1) copy.

    d. Project Recovery Schedules (as applicable), submit one (1) copy.

    e. Documents that are to be submitted in hard copy format are to be delivered to the following:

        Water Services Department

4800 East 63rd Trafficway
Kansas City MO 64130-4626
Attn: Davis McDonald-MacLin, Project Manager

E. Section 01320 – Construction Progress Documentation

1. In accordance with Section 01320, Paragraph 1.08 – SCHEDULE LEVEL, the Contractor shall provide a Schedule Level that meets the minimum requirements of a Level 3 - Detail Schedule as described in Paragraph 1.06M. The Contractor shall prepare all schedules using Primavera version P6 (or higher) or Microsoft Project.

2. In accordance with Section 01320, Paragraph 1.11B – SCHEDULE REQUIREMENTS a Cost Correlation is not a requirement of this Project.

F. Section 01322 – Photographic Documentation

1. In accordance with Section 01322, Subsection 1.07 – MINIMUM REQUIREMENTS, the minimum documentation requirements for this project shall be as follows:

   a. A pre-construction video will not be required as part of the Project.

   b. A Haul Route Video will not be required as part of the Project.
   c. Pre-Construction Photographs **will be required** as part of the Project.

   d. Construction Progress Photographs will not be required as part of the Project.

   e. Construction Activity Photographs will not be required as part of the Project.

   f. Post-Construction Photographs will not be required as part of the Project.

G. Section 01335 – Document Management

1. In accordance with Section 01335, Subsection 1.01 – SUMMARY, the document management system (DMS) will be eBuilder.

H. Section 01500 – Temporary Facilities

1. In accordance with Section 01500, Subsection 3.01-OFFICE, the Contractor will be allowed to use an assigned vehicle in lieu of a stationary office.

2. In accordance with Section 01500, Subsection 3.02 - FIELD OFFICE FOR RESIDENT PROJECT REPRESENTATIVE, the Contractor is not required to provide a field office for the Resident Project Representative.

I. Section 01570 – Temporary Erosion Sediment Control

1. In accordance with Section 01570, Subsection 1.01 - SUMMARY, the Contractor will be responsible for the preparation of Erosion Control Plans. Sensitive areas to be disturbed by the Work that as less than one acre have not been identified.

J. Section 01580 – Project Signs

1. Printers: The following is a list of local businesses who have provided printing services for City project signs. Printing location shall be coordinated with the City/Design Professional.

   a. Almar Printing
      7735 Wornall Road
      Kansas City, MO 64114
      Phone: (816) 523-4566

   b. Custom Color
      14320 W. 101st Terrace
      Lenexa, KS 66215
      Phone: (913) 730-3100

   c. KC Blueprint Company
      1804 Swift St.
      North Kansas City, Missouri 64116
      816-513-1048 Print Center
      816-527-0900 Home Office

   d. Office Max

   e. City Hall Basement Print Center
      414 E. 12th Street
      Kansas City, MO 64106
      Phone: (816) 513-1048

2. In accordance with Section 01580. Subsection 2.05 – NUMBER OF SIGNS TO BE PROVIDED, the Contractor shall provide four (4) project signs.

K. Section 01581 – Public Communications

1. In accordance with Section 01581, Subsection 1.10 – OTHER COMMUNICATIONS, the Contactor shall notify the owner/resident of buildings with interior water meters to schedule an appointment for removal of the existing water meter. The City will provide a template for the notification and mailing list of affected property owners. Contractor shall be responsible for reproduction, mailing and delivery of the notifications. Costs to produce and deliver notifications shall be included in the Contractor's Bid.

L. Section 01700 – Traffic Control

1. In accordance with Section 01700, Subsection 1.08 – SPECIFIC PROJECT REQUIREMENTS:

    a. Contractor shall maintain a minimum of one (1) lane of traffic in each direction at all times except as approved by Public Works.

    b. Contractor shall keep residents, schools, businesses, churches, and other public entities informed of the work schedule that would interfere with access to their facility. Notification shall be distributed at least 3 weeks in advance of work occurring near a facility.

    c. Contractor shall coordinate as necessary travel routes for KCATA buses during lane closures.

2. In accordance with Section 01700, Subsection 1.08 – SPECIFIC PROJECT REQUIREMENTS:

    a. Traffic Control Plans shown in the Design Plans (Sheets 67-73) shall act as a guide for the actual traffic control plans that are required to be submitted to obtain a Traffic Control Permit.

    b. The traffic control plans included within the plan set shall, in no way, subrogate the Contractor and Traffic Control Supervisor's responsibility for developing a traffic control plan that is safe and effective, and which meets Public Work's requirements for obtaining a traffic control permit.

    c. General Traffic Control requirements shall include but are not limited to the following:

i. Contractor shall maintain a minimum of one (1) lane of traffic each direction at all times on all streets.

ii. Contractor shall keep residents, schools, businesses, churches, and other public entities informed of the work schedule that would interfere with access to their facility. Notification shall be distributed at least 3 weeks in advance of work occurring near a facility.

iii. Contractor shall coordinate as necessary travel routes for KCATA buses during land closures.

DIVISION 2 – SITEWORK, SPECIFICATION MODIFICATIONS

A. Division 2 is modified as follows:

1. PAVEMENT REMOVAL AND RESTORATION, Public Right of Way

a. Kansas City, Missouri Public Works Department Standard Detail SR-1, Street Cut Restoration is hereby incorporated by reference.

b. Removal and restoration of pavement shall be in accordance with Standard Detail SR-1 unless otherwise instructed by the City.

2. PARKS AND RECREATION RESTORATION

a. There are certain locations within the City where the infrastructure is under the jurisdiction of the Parks and Recreation Department. These areas include City parkways and major arterial streets designated as parkways. Surface restoration in these areas must be done in accordance with KCMO Parks & Recreation.

B. Section 02250 – Trenching, Pipe Embedment and Backfill

1. In accordance with Section 02250, Subsection 3.02 – PAVEMENT REMOVAL AND RESTORATION:

a. Kansas City, Missouri Public Works Department Standard Detail SR-1, Street Cut Restoration is hereby incorporated by reference.

b. Removal and restoration of pavement shall be in accordance with Standard Detail SR-1 with the following exceptions:

i. General Notes: Requirement to contact the City Forester when digging within five feet of a tree is removed.

ii. General Note 2, Bedding: the note shall be deleted. Bedding requirements shall conform to Section 02250 – Trenching and Backfilling for Utilities.

iii. General Note 3, Backfill: the note shall be deleted. Backfill and compaction shall conform to this to Section 02250 – Trenching and Backfilling for Utilities.

iv. General Note 5.B, Grass Areas: Precedence to the requirements for grading and establishment of turf shall be given to the grading, seeding and sodding specifications in Contract Documents.

v. General Note 9: Manhole castings shall meet the requirements of Section 05010 – Sanitary Sewer Manhole Castings.

vi. Pavement restoration for asphalt pavement shall be completed by replacing the 2-inch patch (Type 5-01) asphalt surface portion of detail 1 with concrete. The concrete shall be placed monolithically with the Portland Cement Concrete Cap portion of the pavement repair. The concrete shall be placed and finished per the requirements of Kansas City, Missouri Public Works standards section 2208 Portland Cement Concrete Pavement.

C. Section 02575 – Surface Restoration

1. In accordance with Section 02575, Subsection 3.06 – STREET CUT RESTORATION:

   All pavement restoration work in streets shall conform to KCMO PW SR-1, unless otherwise instructed by the City, with the following exceptions:

   a. Subgraph A.3 does not apply.

   b. Bid Price for the Pavement Removal and Restoration shall represent the Work required to conform to the PW SR-1 detail as modified by Section 01015 and Section 02250.

D. Section 02675 – Flushing, Testing and Disinfection of Water Mains

1. Scheduling the Work

   a. No Working Hours Adjustments have been identified.

E. Section 02618 – Ductile Iron Pipe Water Main

1. In accordance with Section 02618, Subsection 1.06 – SUBMITTALS:

a. Complete shop drawings and engineering data on all piping and accessories shall be submitted to the City in accordance with the requirements of Section 01300 – Submittals.

F. Section 02930 – Seeding

1. In accordance with Section 02930, paragraph 1.02, all areas disturbed by construction operations shall be seeded if area(s) not comprised of established sod unless directed otherwise by the City.

G. Section 02931 – Sodding

1. In accordance with Section 02931, paragraph 1.02, all areas disturbed by construction operations shall be sodded if area(s) comprised of established sod unless directed otherwise by the City.

3.03 DIVISION 3 – CONCRETE, SPECIFICATION MODIFICATIONS

A. Division 3 - No Modifications

3.04 DIVISION 4 – MASONRY, SPECIFICATION MODIFICATIONS

A. Division 4 - Not used

3.05 DIVISION 5 – METALS, SPECIFICATION MODIFICATIONS

A. Division 5 - No Modifications

3.06 DIVISION 6 – WOODS AND PLASTICS, SPECIFICATION MODIFICATIONS

A. Division 6 - No Modifications

3.07 DIVISION 7 – THERMAL AND MOISTURE PROTECTION, SPECIFICATION MODIFICATIONS

A. Division 7 - Not used

3.08 DIVISION 8 – DOORS AND WINDOWS, SPECIFICATION MODIFICATIONS

A. Division 8 - Not used

3.09 DIVISION 9 – FINISHES, SPECIFICATION MODIFICATIONS

A. Division 9 - Not used

3.10 DIVISION 10 – SPECIALITIES, SPECIFICATION MODIFICATIONS

A. Division 10 - Not used

3.11 DIVISION 11 – EQUIPMENT, SPECIFICATION MODIFICATIONS

A. Division 11 - Not used

3.12 DIVISION 12 – FURNISHINGS, SPECIFICATION MODIFICATIONS

A. Division 12 - Not used

3.13 DIVISION 13 – SPECIAL CONSTRUCTION, SPECIFICATION MODIFICATIONS

A. Division 13 - Not used

3.14 DIVISION 14 – CONVEYANCE SYSTEMS, SPECIFICATION MODIFICATIONS

A. Division 14 - Not used

3.15 DIVISION 15 – MECHANICAL/PLUMBING, SPECIFICATION MODIFICATIONS

A. Division 15 - Not used

3.16 DIVISION 16 – ELECTRICAL, SPECIFICATION MODIFICATIONS

A. Division 16 - Not used

END OF SECTION

SECTION 01016 – WATER MAINS NEAR SEWERS

PART 1 - GENERAL

1.01 SUMMARY

This section covers the required separation, horizontal and vertical, of water mains from any existing or proposed sanitary sewer, sewer force main or storm sewer. The horizontal separation shall be ten feet (10') and the vertical separation shall be eighteen inches (18"). If this specification conflicts with other specifications, this specification shall govern. If this specification conflicts with Missouri's Code of State Regulations, the Code of State Regulations govern.

1.02 SPECIFICATION MODIFICATIONS

A. It is understood that throughout this section these Specifications may be modified by appropriate items in Section 01015 – Specific Project Requirements, or as otherwise indicated on the Contract Drawings.

1.03 RELATED SECTIONS

A. Section 01015 – Specific Project Requirements.
B. Section 02618 – Ductile Iron Pipe for Water Mains.
C. Section 02620 – Ductile Iron Pipe for Sewers.
D. Section 02624 – PVC Gravity Sewer Pipe.

1.04 CODES AND STANDARDS

A. The publications listed below form a part of this specification to the extent referenced. The publications are referred to within the text by the basic designation only.
B. Missouri Code of State Regulations.
C. American Society for Testing and Materials (ASTM):

D2321	Standard Practice for Underground Installation of Thermoplastic Pipe for Sewers and Other Gravity-Flow Applications.
D2412	Standard Test Method for Determination of External Loading Characteristics of Plastic Pipe by Parallel-Plate Loading.
D3034	Standard Specification for Type PSM Poly (Vinyl Chloride) (PVC) Sewer Pipe and Fittings.
D3212	Standard Specification for Joints for Drain and Sewer Plastic Pipes Using Flexible Elastomeric Seals.
F477	Standard Specification for Elastomeric Seals (Gaskets) for Joining Plastic Pipe.
F679	Standard Specification for Type PSM Poly Vinyl Chloride (PVC).

1.05 DEFINITIONS

A. Non-Potable Fluid Line: An existing or proposed pipeline that carries non-potable fluids such as, but not limited to drains, storm sewers, sanitary sewers, combined

sewers, sewer service connections, sanitary sewer force mains, process waste or product lines.

B. Non-Potable Fluid Structure: An existing or proposed structure associated with a Non-Potable Fluid Line. Non-Potable Fluid Structures include, but are not limited to, sanitary sewer manholes, sanitary sewer pump stations, storm sewer inlets and storm sewer junction boxes.

1.06 INFORMATION PROVIDED BY THE CITY

A. As provided in the contract documents.

1.07 SUBMITTALS

A. Submit as specified in Section 01300 – Submittals.

1.08 QUALITY ASSURANCE

A. The Contractor is responsible for the quality assurance and quality control of the Work.

1.09 PRODUCT DELIVERY, STORAGE AND HANDLING

A. Follow the provisions for the delivery, storage and handling of products to and at the site as provided in Section 01000 – General Project Requirements.

PART 2 - PRODUCTS

2.01 PVC PIPE

A. Sewers reconstructed using PVC pipe shall conform to Section 02624 – PVC for Gravity Sewers.

2.02 DUCTILE IRON PIPE

A. Sewers reconstructed using ductile iron pipe shall conform to Section 02620 - Ductile Iron Pipe for Sewers. Joints shall be restrained push-on joints.

PART 3 - EXECUTION

3.01 SEPARATION REQUIREMENTS

A. The Missouri Department of Natural Resources (MDNR) has established the minimum separation requirements between water distribution systems and potential sources of contamination such as Non-Potable Fluid Lines, Non-Potable Fluid Structures and Disposal Facilities.

B. When ten foot (10’) horizontal separation cannot be achieved, the strategy for protecting the water distribution system is to be shown on the Drawings. Eighteen inches (18”) of vertical separation is required at all times.

C. If the Contractor encounters conditions during construction for which the minimum requirements for separation cannot be met, then the work shall be stopped and the City’s representative shall be notified. The strategy to protect the water distribution system shall be provided to the Contractor by the City.

3.02 PARALLEL INSTALLATION

A. Minimum Requirements:
   1. Water mains shall be laid at least 10 feet horizontally, from any non-potable fluid line. The distance shall be measured from edge to edge.
   2. An elevation difference shall be maintained such that the bottom of the water main is at least 18 inches above the top of the non-potable line while also meeting minimum cover requirements for the water main.

B. Conforming to Standards:
   1. In cases where it is not possible to maintain a 10-foot horizontal separation, the City may allow alternative designs on a case-by-case basis consistent with the Code of State Regulations. The following minimum criteria shall be met:
      (a) The water main shall be laid in a separate trench located as far away from the non-potable line as feasible. The water main shall be installed on an undisturbed earth shelf located on one side of the non-potable line so the bottom of the water main is at least eighteen inches (18”) above the top of the sanitary sewer.
   2. Alternatively, one or more of the following options may be required:
      (a) The sewer main shall be reconstructed in accordance with paragraph 3.06 SANITARY SEWER RECONSTRUCTION.
      (b) Casing pipe shall be installed so either the water line or the non-potable fluid line is cased in all areas until the horizontal separation requirement is achieved.
         (i) The casing shall be installed so it is a continuous casing.
         (ii) The casing pipe material shall be PVC C900 or ductile iron pipe as specified in PART 2 - PRODUCTS.
      (c) The required length of sewer to be reconstructed or continuously cased shall be the length necessary to achieve the minimum 10 foot horizontal separation.

3.03 CROSSINGS

A. Water mains that cross non-potable fluid lines shall be laid to provide a minimum vertical clear distance of 18 inches between the outside of the water main and the outside of the non-potable fluid line. This shall be the case where the water main is either above or below the non-potable fluid line.

B. At crossings, one full length of water pipe shall be located or centered so both joints will be located as far as possible from the non-potable line.

C. Additional requirements:
   1. When crossing under a non-potable fluid line, the following criteria shall also be met:
      (a) The non-potable fluid line shall be reconstructed in accordance with paragraph 3.06 SANITARY SEWER RECONSTRUCTION.
   2. When crossing under a non-potable fluid line, one or more of the following criteria may also be required by the City/Design Professional:
      (a) The water line shall be constructed using restrained joints. Installed in a casing pipe with casing spacers and end seals (see paragraph 3.07).
      (b) Install casing pipe for non-potable fluid line (see paragraph 3.07):
         (i) The casing shall be continuous.
         (ii) The casing pipe material shall be AWWA C900 pressure pipe or ductile iron pipe as specified in PART 2 - PRODUCTS.

(iii) The full length of casing pipe is to be located so each end of the casing is as far from the point of crossing as possible.

3.04 NON-POTABLE FLUID STRUCTURES

A. No waterline shall be installed closer than 10 feet to any part of a sanitary or combined sewer manhole. For all other Non-potable Fluid Structures, the minimum separation shall be 18 inches.

B. Conforming to Standards:

1. Where the horizontal separation cannot be obtained, the waterline shall be constructed of mechanical or manufactured restrained joint pipe or cased in a continuous casing. Casing pipe must be a material that is approved for use as water main.
2. The full length of water pipe shall be located so both joints will be as far from the manhole as possible, but in no case less than 10 feet or centered on a nominal 20-foot pipe.

C. No water pipe shall pass through or come into contact with any part of a Non-Potable Structure.

3.05 DISPOSAL FACILITIES

A. No water main shall be located closer than 25 feet to any wastewater disposal facility, agricultural waste disposal facility, or landfill.

B. Water mains shall be separated by a minimum of 25 feet from septic tanks and wastewater disposal areas such as cesspools, subsurface disposal fields, pit privies, land application fields, and seepage beds.

C. All such disposal facilities shall be noted on the Drawings.

3.06 SANITARY SEWER RECONSTRUCTION

A. The paragraph applies to the installation of potable water lines crossing under non-potable fluid lines with the eighteen inches (18”) of vertical clearance.

B. As indicated on the Drawings, specified in Section 01015 – Specific Project Requirements, or as otherwise directed by the City, the Contractor shall reconstruct the non-potable fluid line using mechanical or manufactured restrained joint pipe, or fusion welded pipe meeting the following criteria:

1. Pipe material shall be PVC or ductile iron pipe as specified in PART 2 – Products.
2. Install as specified herein and in accordance with drawing No. 01016-1, Sewer Crossing Detail.

3.07 CASINGS FOR PIPE CROSSINGS

A. The casing pipe material shall be C900/C905 PVC.

B. The full length of casing pipe shall be located so both joints will be as far from the non-potable pipeline as possible, but in no case less than 10 feet or centered on a nominal 20-foot pipe.

C. See section 02320 – Utility Casings for casing spacer and casing end seal requirements.

3.08 CONCRETE ENCASEMENT

A. Conventional poured concrete encasement is not allowed.

Drawings 01016-1 through 01016-5 are on the following five pages.

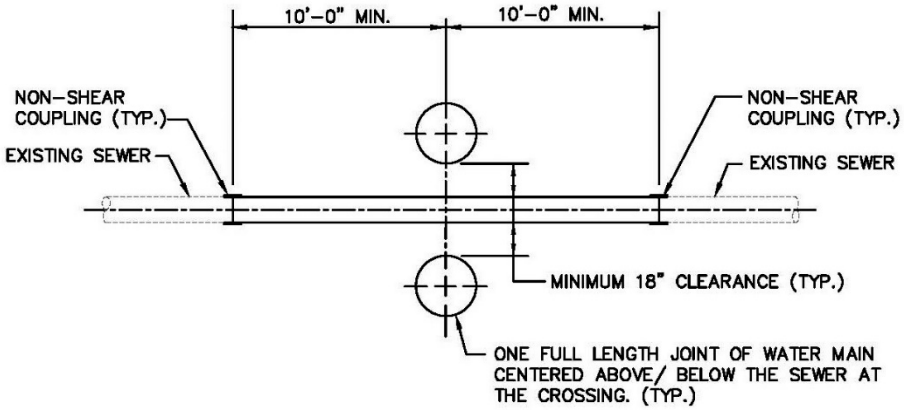

ELEVATION
NOT TO SCALE

NOTES:

1. IF THE WATER MAIN CROSSES BELOW THE SEWER, THE SEWER SHALL BE REPLACED WITH PVC OR DIP.
2. PVC PIPE SHALL CONFORM TO 02624 PVC GRAVITY SEWER PIPE, DIP SHALL CONFORM TO 02620 DIP FOR SEWERS.

SEWER CROSSING DETAIL

WATER SERVICES
CITY OF KANSAS CITY, MISSOURI
DRAWING NO. 01016-1

DEVELOPED BY: TECHNICAL ADVISORY COMMITTEE
APPROVED BY:
DATE: 3/15/2021

1 OF 1

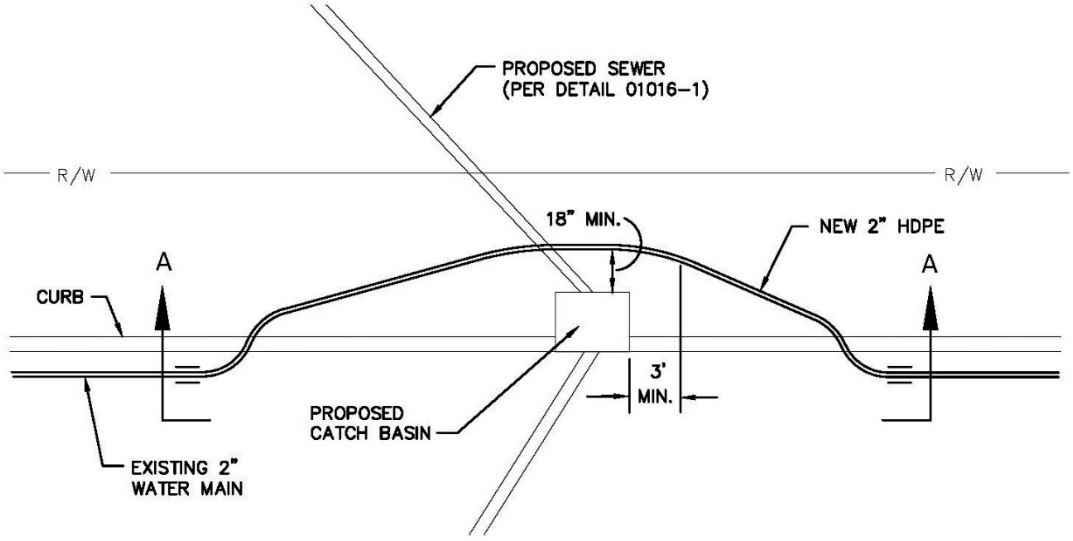

PLAN
NOT TO SCALE

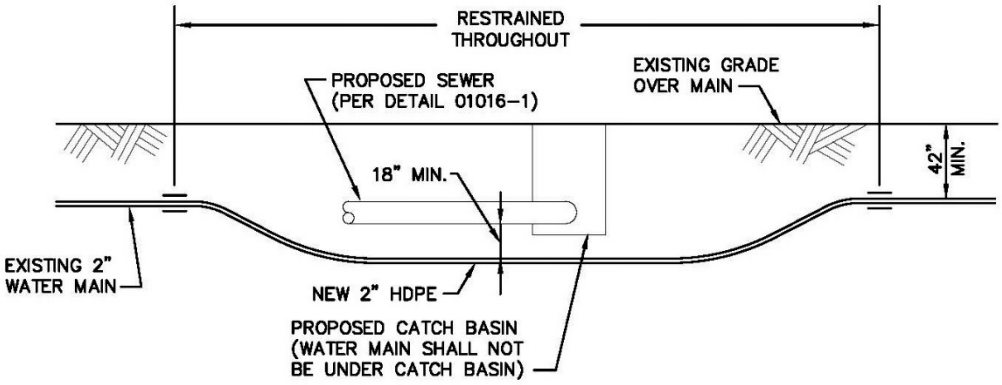

SECTION A-A
NOT TO SCALE

EXISTING 2" OR SMALLER WATER MAIN RELOCATION AT SEWER

WATER SERVICES
CITY OF KANSAS CITY, MISSOURI
DRAWING NO. 01016-2

DEVELOPED BY: _____ APPROVED BY: _____
TECHNICAL ADVISORY COMMITTEE DATE: 3/15/2021

1 OF 1

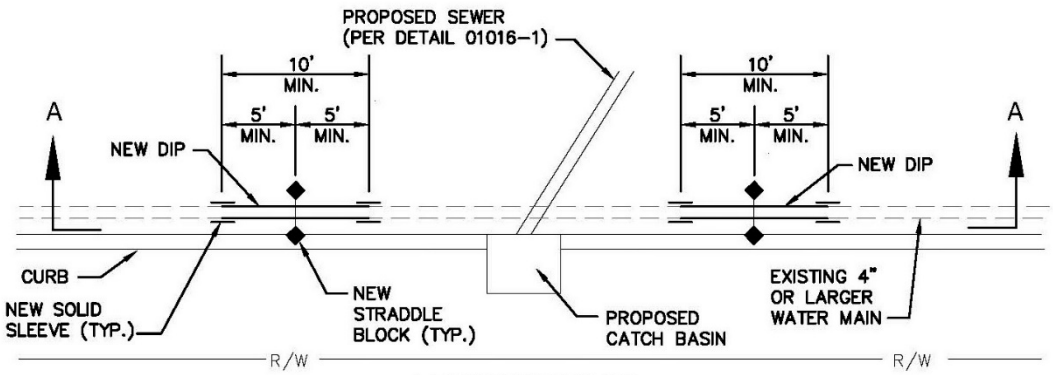

TEMPORARY PLAN

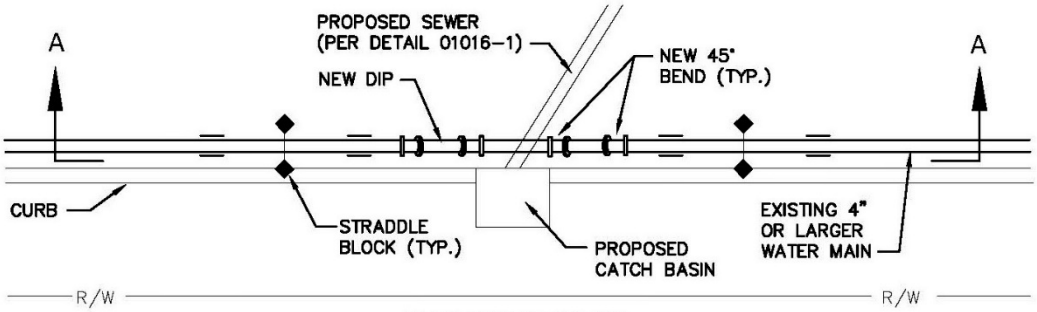

PERMANENT PLAN

NOT TO SCALE
RESTRAIN ALL JOINTS

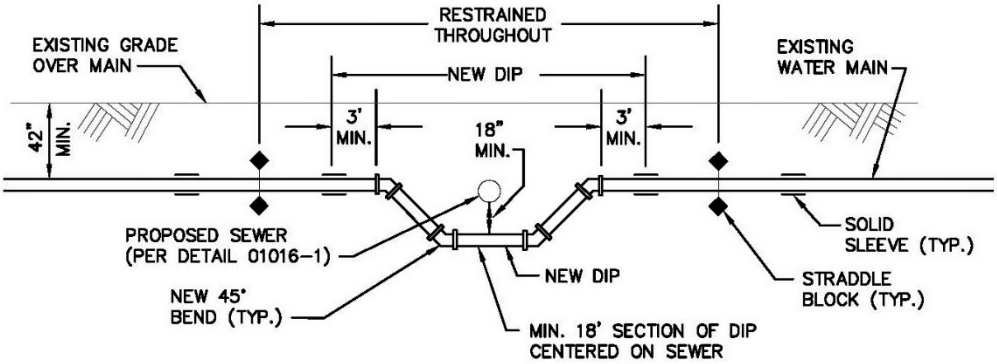

SECTION A-A

NOT TO SCALE

EXISTING 4" OR LARGER WATER MAIN VERTICAL RELOCATION AT SEWER

WATER SERVICES
CITY OF KANSAS CITY, MISSOURI

DRAWING NO. 01016-3

DEVELOPED BY: TECHNICAL ADVISORY COMMITTEE

APPROVED BY:

DATE: 3/12/2021

1 OF 1

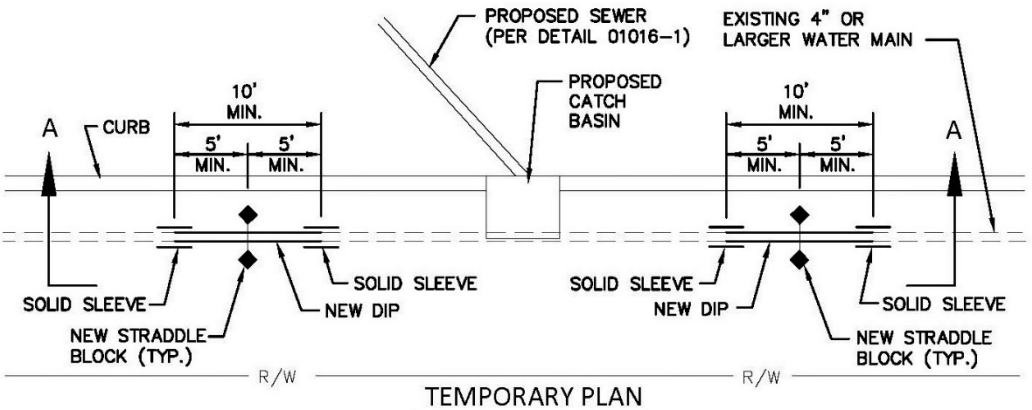

TEMPORARY PLAN

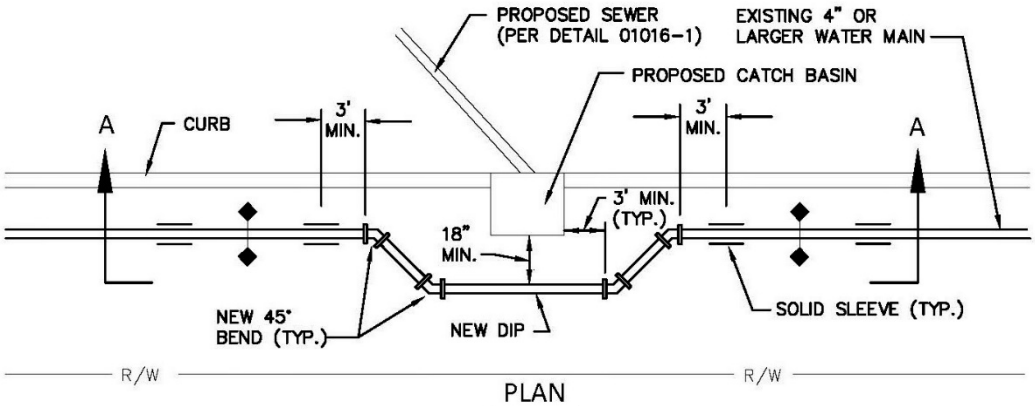

PLAN

NOT TO SCALE
RESTRAIN ALL JOINTS

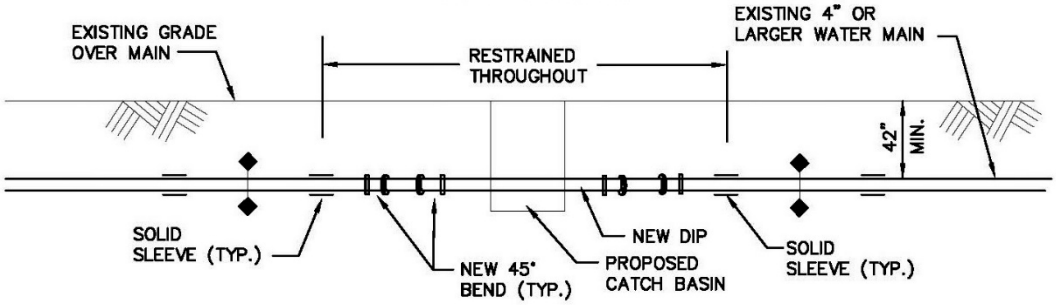

SECTION A-A

EXISTING 4" OR LARGER WATER MAIN
HORIZONTAL RELOCATION AT SEWER STRUCTURE

WATER SERVICES
CITY OF KANSAS CITY, MISSOURI
DRAWING NO. 01016-4

DEVELOPED BY: _____ APPROVED BY: _____
TECHNICAL ADVISORY COMMITTEE DATE: 3/12/2021

1 OF 1

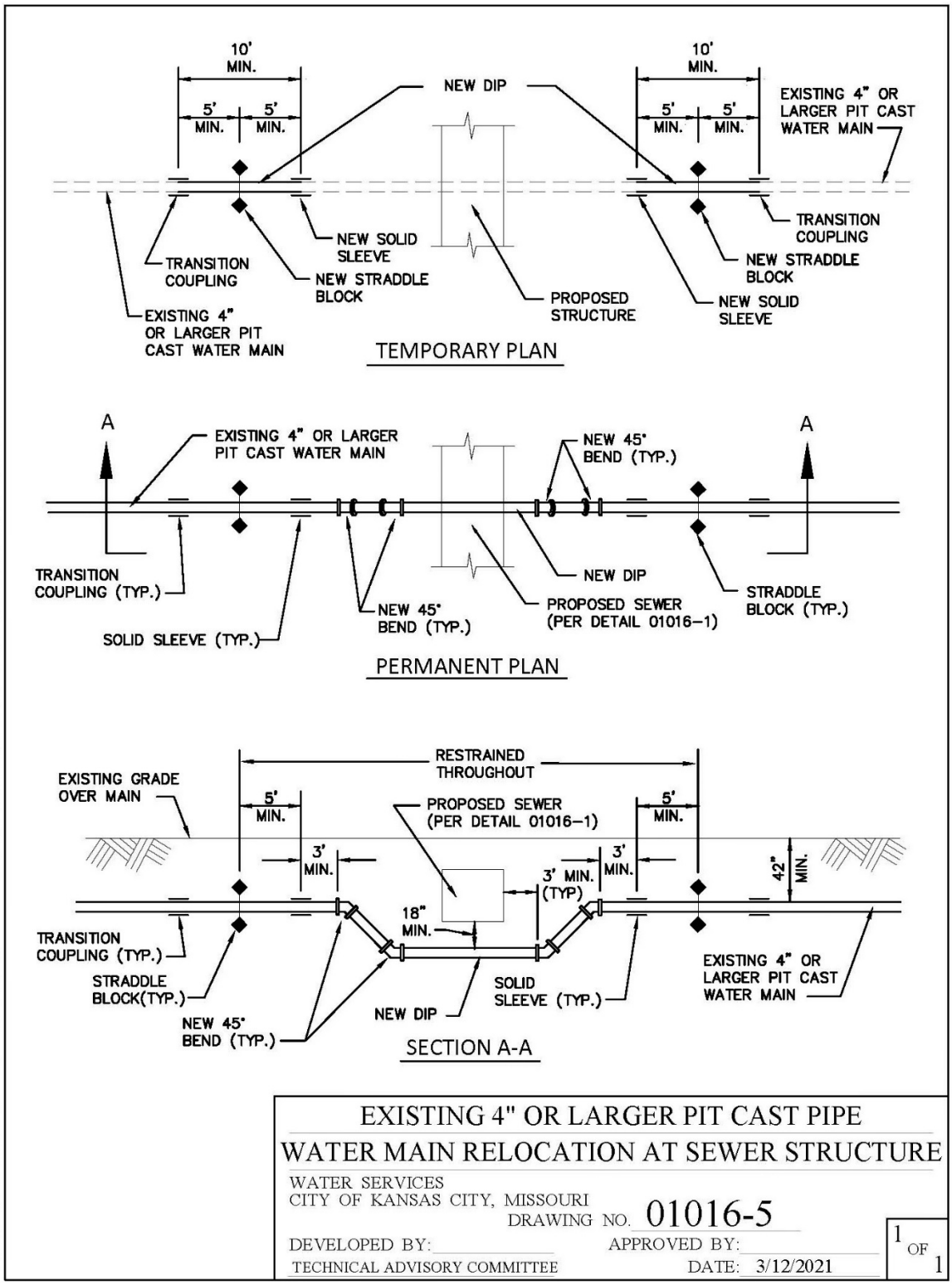

END OF SECTION

SECTION 01020 – RECORD DOCUMENTS

PART 1 - GENERAL

1.01 SUMMARY

A. Contractor shall maintain, in a safe place at the Site, one updated record copy of all Drawings, Standards and Specifications, Addenda, Shop Drawings, Requests for Interpretation (RFIs), Requests for Proposal (RFPs), Work Change Directives (WCDs), Change Orders, other written interpretations or clarifications of the contract documents, survey information (including approved cut sheets) and all other documents relevant to the Work.

B. All such documents shall be kept in order, good condition and shall be continuously updated to indicate all work installed and all changes made during construction.

C. No work shall be allowed in the absence of these record documents.

D. This document also outlines electronic data requirements and defines the survey requirements for the development of Field-Marked Drawings, As-Built Drawings and Conforming to Construction Drawings.

1.02 SPECIFICATION MODIFICATIONS

A. It is understood that throughout this section these Specifications may be modified by appropriate items in Section 01015 – Specific Project Requirements or as otherwise indicated on the Contract Drawings.

1.03 RELATED SECTIONS

A. Section 00700 – General Conditions.

B. Section 01015 – Specific Project Requirements.

C. Section 01300 – Submittals.

D. Section 01335 – Document Management.

E. Section 02686 – CCTV Inspection.

1.04 CODES AND STANDARDS

A. CAD Standards – United States National CAD Standards.

B. KC Water CAD Design Standards and Specifications – latest version available from City

1.05 DEFINITIONS

A. Drawings – As defined by Section 00700 – General Conditions.

B. Approved for Construction Drawings – Any drawing or sketch that has been issued to the Contractor by the City for the purposes of constructing the Work. These include, but are not limited to, the following: Drawings, revisions to the Drawings, information issued as part of change orders and information issued as part of work change directives.

C. Field-Marked Drawings (Red Line Markups) – A copy of the Approved for Construction Drawings that is maintained and updated daily by the Contractor during construction detailing all work completed and depicting all changes made to the Work during construction.

D. As-Built Drawings – The completed Field-Marked Drawings that include the signed certification language from both the Contractor and Surveyor.

E. Conforming to Construction Drawings – The Approved for Construction Drawings

that have been revised to reflect the changes noted on the As-Built Drawings. For these drawings, the CAD files are updated and a new set of drawings is created.

F. Record Drawings – All drawings used or developed as part of the Work. Record Drawings include, but are not limited to, the following: Approved for Construction Drawings, Field-Marked Drawings, As-Built Drawings and Conforming to Construction Drawings.

G. Record Documents – As defined by this Section, Section 01015 and Section 00700 – General Conditions, Article 6 Contractor's Responsibilities.

1.06 INFORMATION PROVIDED BY THE CITY

A. The City will provide the Contractor a suitable copy of the Approved for Construction Drawings in an electronic/CAD format.

1.07 SUBMITTALS

A. Submit as specified in Section 01300 – Submittals.

B. Submittals include, but are not limited to, the following:

(a) All Record Documents – As required by this Section, Section 1015 and Section 00700 – General Conditions, Article 6, Contractor's Responsibilities, paragraph Record Documents.

(b) Field-Marked Drawings.

(c) As-Built Drawings.

(d) Conforming to Construction Drawings.

(e) Other Record Documents as requested by the City.

1.08 QUALITY ASSURANCE

A. The Contractor is responsible for the quality assurance and quality control of the Work.

PART 2 - PRODUCTS

Not used.

PART 3 - EXECUTION

3.01 SURVEY REQUIREMENTS

A. All field books, notes, videotapes and other data developed by the Contractor in performing surveys required as part of the Work shall be available to the City for examination throughout the construction period. All such data shall be submitted to the City with the other documentation required for final acceptance of the Work.

B. General Requirements:

(a) The Contractor shall provide survey grade information for the locations and elevations of the Work as described herein. Surveys shall be conducted by a Professional Land Surveyor, licensed in the State of Missouri (Surveyor).

(b) Vertical Datum – All elevations shall be indicated in North American Vertical Datum of 1988 (NAVD 88) in feet and decimals of a foot.

(c) Horizontal Control – Coordinates shall be referenced to the North American Datum of 1983 (NAD 83), State Plane Missouri West Zone FIPS 2403 US Feet coordinate system, Kansas City Metro Control. Statewide Missouri Geographical Reference System monuments, Project monuments and Certified Land corners shall be used as references to determine State Plane coordinates.

All control monuments used in the survey work shall be listed with reference ties and shown on the Record Drawings.

C. Water Systems:

(a) Fire Hydrant Assemblies – Provide survey point (location and elevation) at the top of the operating nut for each fire hydrant.

(b) Fittings – Provide survey point (location and elevation) at the center of each fitting (i.e. bends, tees, valves, etc.). Survey shall be taken at the top of the fitting. Provide the elevation of finished grade or improvements at the top of the fitting.

(c) Pipe Profile – Provide survey points (location and elevation) at the center point of all piping at a maximum spacing of 50 feet. Survey shall be taken on the top of the pipe. At the same location, provide the elevation of finished grade.

(d) Valves, Valve Vaults, Meter pits and Other Structures – A survey is required to verify the location of all new valves, valve vaults, meter pits or other structures. The survey shall include, but is not limited to, the following:

(i) Location of the Structure – Provide coordinates for the center of the access cover.

(ii) Top Elevation – Provide the top elevation of the structure at the center of the access cover.

D. Wastewater Systems:

(a) New Manholes – A survey is required to verify the location of all new manholes. The survey shall include, but is not limited to, the following:

(i) Location – Verify the "Locating Point" shown on the Approved for Construction Drawings or standard detail. Verify all coordinate data shown on the Approved for Construction Drawings. If no such information is provided, the Locating Point shall be the center of the manhole cover.

(ii) Top Elevation. – Provide the elevation of the top of the structure at the Locating Point.

(iii) Pipe Inverts – Provide the invert elevation and flow direction of all pipes that penetrate the structure (flowline in - FL IN) and exit the structure (flowline out - FL OUT).

(iv) Manhole Invert – Provide the elevation of the invert at the center of the manhole if different than the pipe inverts.

(b) Existing Manholes – A survey is required to verify the location of all existing manholes that are modified as part of the Work. The survey shall include, but is not limited to, the following:

(i) Location of the Structure – Verify the "Locating Point" shown on the Approved for Construction Drawings or standard detail. Verify all coordinate data shown on the Approved for Construction Drawings. If no such information is provided, the Location Point shall be the center of the manhole cover.

(ii) Top Elevation – Provide the elevation of the top of the structure at the Locating Point.

(iii) Pipe Inverts – Provide the invert elevation and flow direction of all pipes that penetrate the structure (flowline in - FL IN) and exit the structure (flowline out - FL OUT).

(iv) Manhole Invert – Provide the elevation of the invert at the center of the manhole if different from the pipe inverts.

E. Storm Water and Green Infrastructure Systems:

(a) A survey is required to verify the location of all new Green Infrastructure, Storm

Water Structures, Junction Boxes, Manholes, Inlets and all other related structures. The survey shall include, but is not limited to, the following:

(i) Location of the Structure – Verify the Locating Point shown on the Approved for Construction Drawings or standard detail. Verify all coordinate data shown on the Approved for Construction Drawings. The locating point for curb inlets is center of inside face of inlet wall. If no other locating information is provided for other structures, the Locating Point shall be the center of the access cover.

(ii) Top Elevation – Provide the elevation of the top of the structure at the Locating Point.

(iii) Pipe Inverts – Provide the invert elevation and flow direction of all pipes that penetrate the structure (flowline in - FL IN) and exit the structure (flowline out - FL OUT).

(iv) Manhole or Structure Invert – Provide the elevation of the invert at the center of the manhole or structure if different than the pipe inverts.

(b) Culvert:

(i) A survey is required to verify the location of new culverts. The survey shall include, but is not limited to, the following:

(ii) Location – The Locating Points shall be the center line of each culvert barrel at the upstream and downstream end of each. The location of each culvert barrel is to be provided.

(iii) Invert – Provide the upstream and downstream invert elevation of each culvert barrel.

(c) Channels and Ditches:

(i) Profile – Provide survey points (location and elevation) at the upstream and downstream end of the channel and along the channel at a maximum 50-foot intervals and at all bends and changes in alignment.

(ii) Survey points shall be taken at finished grade at the centerline, toes of side slopes or walls and top elevation of the high flow channel on both sides of the channel. If water is present in the channel or ditch, provide water surface elevation on both sides of the channel.

(d) Detention Areas:

(i) For any surface feature designed to detain or retain storm water runoff (i.e., detention basins, rain gardens, bio-retention cells, etc.) an as-built survey of the feature is required.

(ii) Enough survey points shall be taken to generate 1-foot contours of the detention or retention area and any containment berms.

(iii) Provide survey points (location and elevation) for both ends of weirs, all weir high and low points (if top of weir is not level) and other flow control structures, inlets and outlets.

(iv) Provide survey points (location and elevation) for both ends of weirs and all weir high and low points (if top of weir is not level) of the principle spillway structure.

3.02 FIELD-MARKED DRAWINGS

A. The Contractor shall continuously maintain a set of Field-Marked Drawings which details all work completed and shows all changes or deviations made by the Contractor from the Approved for Construction Drawings. Where the Approved for Construction Drawings are not detailed and allow for flexibility during construction, the Contractor shall include the detailed information on how the Work was

constructed. These adjustments shall include, but are not limited to, field adjustments and change orders.

B. Field-Marked Drawings shall be prepared using survey grade information to show the horizontal and vertical location of the Work after completion of construction. Connection details may be sketched using field run measurements.
C. Mark new information that is important to the City that is not shown on Drawings or Shop Drawings.
D. Note related Change Order numbers where applicable.
E. Include the following:
   (a) Field changes of dimension and detail.
   (b) Changes made by Change Order or other modifications.
   (c) Details not on original Drawings.
   (d) Horizontal and vertical location of all underground utilities and all other concealed elements that would complicate and make difficult/expensive to maintain the installed asset at a later date.
F. Precision of Measurement:
   (a) Where survey measurements are not required (sketching connection details) – elevations, stationing, distances and measurements shall be expressed to the nearest 0.10 foot.
   (b) All other Work requires survey information – elevations, station, distances and measurements shall be expressed to the nearest 0.01 foot.
G. Field changes or additions shall be designated in RED. Hard copy and electronic (PDF) deliverables shall be provided in color.
H. Information shall be clearly distinguishable on hard copy mark-ups and in the electronic files.
I. If the Contractor observes inaccurate information pertaining to existing conditions, the correct information shall be noted in the Field-Marked Drawings.
J. The Contractor shall submit 30%, 60% and 90% check prints with the corresponding percent complete of work. The check prints shall be submitted with the Application for Payment. Failure to provide the check prints shall cause the Application for Payment to be returned to the Contractor.

3.03 AS-BUILT DRAWINGS

A. Upon completion of the Work and before the Application for Final Payment, the Contractor shall prepare the As-Built Drawings by completing annotations to the Field-Marked Drawings and adding the required certification statements.
B. Surveyor's Certification:
   (a) Each drawing shall be modified to include a certification statement and signature block as described below.
   (b) Every sheet of the Field-Marked Drawings must be reviewed, signed and sealed by a Professional Land Surveyor, licensed in the State of Missouri and must include the following statement on the title block inside the box marked "for WSD use" and near the Surveyor's professional license seal:

      (i) Water Systems

      Each sheet of these Record Drawings and attached Survey Cut Sheets for the Work have been reviewed and approved by the Professional Land Surveyor whose seal is affixed to this Record. The horizontal control, coordinates and elevations shown on these Records are accurate and are based on the Missouri Coordinate System of 1983, West Zone and

NAVD88 datum, with the date of adjustment. These Records have been revised, as required in Section 01000, 1.20 of the Standards and Specifications for Water Main Extensions and Relocations, under my personal supervision to show the true and accurate measurements of the work as it was actually constructed.

(ii) Wastewater, Storm Water and Green Infrastructure Systems

Each sheet of these Record Drawings and attached Survey Cut Sheets for the Work have been reviewed and approved by the Professional Land Surveyor whose seal is affixed to this Record. The horizontal control coordinates and elevations shown on these Records are accurate and are based on the Missouri Coordinate System of 1983, West Zone and NAVD88 Datum. These Records have been revised under my personal supervision to show the true and accurate measurements of the work as it was actually constructed.

C. Contractor's Certification:

(a) Each drawing shall be modified to include a certification statement and signature block as described below.

(b) The Contractor shall provide certification that the Field-Marked Drawings reflect the conditions that were constructed.

(c) The Contractor shall review the Field-Marked Drawings and verify all information is accurate. The Contractor shall verify that all changes to the Work have been documented. The Contractor shall sign each sheet of the Record Drawings with the following certification(s):

(i) Water Systems

I hereby certify that this Record correctly depicts the Work constructed as to size, material, horizontal location, vertical location and finished grade as shown on the approved construction drawings or their revision. The Work was done in accordance with these Records and the current version of the Standards and Specifications for Water Main Extensions and Relocations.

Contractor: _____ *Date:* _____

Name (print): _____ *Title:* _____

Signature: _____

(ii) Wastewater, Storm Water and Green Infrastructure Systems

I hereby certify that this Record correctly depicts the Work constructed as to size, material, horizontal location, vertical location, grade of installed piping systems and finished grade as shown on the approved construction drawings or their revision. The Work was done in accordance with these Records.

Contractor: _____ *Date:* _____

Name (print): _____ *Title:* _____

Signature: _____

D. Submittals – Submit As-Built Drawings in accordance with paragraph SUBMITTALS. As-Built and Conforming to Construction Drawings must be

approved by the City before the Contractor submits the Application for Final Payment.

E. Mark each document "AS-BUILT DRAWINGS" in neat, large print letters.
F. The cover sheet of the project shall be included. The cover sheet shall include all required As-Built certifications and shall clearly show that the drawings are AS-BUILT.

3.04 CONFORMING TO CONSTRUCTION DRAWINGS

A. The Contractor shall prepare Conforming to Construction Drawings as required by this Section and Section 01015 – Specific Project Requirements.
B. Conforming to Construction Drawings shall be submitted and accepted by the City before the Contractor may submit the Application for Final Payment.
C. The Contractor shall edit the CAD drawings to reflect the changes shown on the As-Built Drawings. All line work and text shall be revised and edited to accurately reflect the information provided in the As-Built Drawings. Line work shall be drawn to scale in the coordinate system and datum specified herein.
D. Version – CAD drawings shall be developed and submitted in the latest version of AutoCAD® .dwg format or AutoCAD® Civil 3D and in .sdf format. See Section 01015 – Specific Project Conditions for additional information regarding CAD formats and standards.
E. CAD Standards – Comply with United States National CAD Standards.
F. KC Water CAD Design Standards and Specifications
G. The cover sheet of the project shall be included. The cover sheet shall include all required as-built certifications and shall clearly show that the drawings are as-built.
H. Conforming to Construction Drawings shall have a "CONFORMED TO CONSTRUCTION" label clearly and prominently shown on each sheet, preferably in the lower right-hand corner of the drawing.
I. Conforming to Construction Drawings shall be labeled with the following information:
   (a) Project Name.
   (b) WSD Project Number.
   (c) WSD Work Order Number.
   (d) WSD Drawing Number.
   (e) Date of publication.
J. Submittals – Submit Conforming to Construction Drawings in accordance with paragraph SUBMITTALS.

3.05 OTHER RECORD DOCUMENTS

A. As defined by Section 00700 – General Conditions, Article 6 – Contractor's Responsibilities.
B. Coordinates Table – Provide the coordinates of every asset installed or adjusted as part of the Work on the Microsoft Excel spreadsheet "Project XXXXXXXX Asset Coordinate Table.xls" as provided by City.
C. Survey Cut Sheets.
D. Television Inspection data files as specified in Section 02686 – CCTV Inspection.
E. Other information as specified in Section 01015 – Specific Project Requirements.

3.06 DELIVERABLES AND SUBMITTALS

A. Electronic Submittals:
   (a) All electronic deliverables (drawings, coordinates table, etc…) shall be made

through the approved document management system. See Section 01335 – Document Management.

B. As-Built Drawings:
   (a) One (1) hard copy on paper for review and approval.
   (b) One (1) electronic copy in PDF format.
   (c) One (1) electronic copy in the latest version of AutoCAD® .dwg format.

C. Conforming to Construction Drawings:
   (a) One (1) signed, sealed and certified hard copy on Mylar or Vellum.
   (b) One (1) signed, sealed and certified hard copy on paper.
   (c) One (1) signed, sealed and certified electronic copy in PDF format.
   (d) One (1) signed, sealed and certified electronic copy in the latest version of AutoCAD® .dwg format.

D. Record Documents:
   (a) Submit Record documents in accordance with Section 00700 – General Conditions, Article 14 – Payments to the Contractor and Completion.
   (b) Submit other documents as required by paragraph 3.05 OTHER RECORD DOCUMENTS of this section.
   (c) One (1) hard copy on paper.
   (d) One (1) electronic copy in PDF format.
   (e) As specified in other sections.

E. Electronic (PDF) Documents:
   (a) Documents shall be full scale.
   (b) Markups shall be noted in RED.
   (c) Minimum resolution shall be 600 dpi.

3.07 CORRECTIONS DURING THE WARRANTY PERIOD

A. The Record Documents shall be an integral part of the work guaranteed by the Contractor's Performance and Maintenance Bond. If during the three-year maintenance period the City determines that further revisions or corrections are necessary to make the Record Documents accurate, the Contractor shall make or cause the revisions or corrections to be made at no additional cost to the City.

END OF SECTION

CITY OF FOUNTAINS
HEART OF THE NATION
KANSAS CITY
MISSOURI

ALLOWANCE AUTHORIZATION

Project Number _____

Project Title _____

To: _____
_____
Re: _____
_____

Authorization Number: _____
From: _____
Date: _____
Contract For: _____

You are authorized to perform the following item(s) of work and to adjust the Allowance Sum accordingly:

This is NOT a CHANGE ORDER and does NOT INCREASE OR DECREASE the CONTRACT AMOUNT.

Original Allowance	$_____
Allowance Expenditures prior to this Authorization	$_____
Allowance Balance prior to this Authorization	$_____
Allowance will be [❑ increased] [❑ decreased] by this Authorization	$_____
New Allowance Balance	$_____

APPROVAL RECOMMENDED

_____
Design Professional Date

_____
Construction Manager Date

CITY APPROVAL

_____
City's Representative Date

CONTRACTOR ACCEPTANCE

_____
Contractor Date

❑ Attachments:

Distribution:
- ❑ City
- ❑ Contractor
- ❑ Construction Manager
- ❑ Design Professional
- ❑ Consultant
- ❑ Other

APPLICATION FOR PAYMENT

Project Number _____

Project Title _____

Final Payment[5] ☐

Application Number[2]: _____

CONTRACTOR — Date: _____

Ordinance/Resolution Number: _____

Address — Effective: _____

PO Number _____

Vendor Number _____

Application for Work Accomplished from _____ to _____

Original Contract Price		[1]			$ -
Net by Change Orders___through___				[2]	$ -
Current Contract Price (1+2)				[3]	$ -
Completed Work		[4]	$ -		
Disputed Amounts[3]	[-]	[4a]	$ -		
Stored Material[4]		[5]	$ -		
Disputed Amounts[3]	[-]	[5a]	$ -		
Total Completed and Stored to Date (4+5)				[6]	$ -
Previous Payments		[7]	$ -		
Previous Retainage		[8]	$ -		
Total Previous Applications (7+8)				[9]	$ -
Amount This Application (6-9)				[10]	$ -
Less Retainage This Application (5%)				[-] [11]	$ -
Release of Retainage				[12]	$ -
Total Due This Application (10-11+12)				[13]	$ -
Liquidated Damages					
Completion of Work		[14]	$ -	[-]	$ -
Prevailing Wage[7]		[15]	$ -	[-]	$ -
MBE/WBE Program[7]		[16]	$ -	[-]	$ -
Workforce Program[7]		[17]	$ -	[-]	$ -
Total Amount Due Contractor (13 - 14 through 17)				[18]	$ -

Accompanying Documentation: [1, 2, 3, 4, 5, & 6] and any other information as necessary.

NOTE: Initial all figures on this Application and on the Schedule of Values that are changed to correct errors or conform to the amount recommended. Attach explanation of changes that have been made.

CONTRACTOR's Certification:

The undersigned CONTRACTOR certifies that (a) all previous progress payments received from OWNER on account of Work done under this Contract have been applied on account to discharge CONTRACTOR's legitimate obligations incurred in connection with Work covered by all prior Applications for Payment; (b) at time of payment, title of all Work, materials and equipment incorporated into said Work or otherwise listed in or covered by this Application for Payment will pass to OWNER free and clear of all Liens, security interests and encumbrances (except such as are covered by a Bond acceptable to OWNER indemnifying OWNER against any such Lien, security interest or encumbrance); and (c) all Work covered by this Application for Payment is in accordance with the Contract Documents and not defective; and (d) all manufactured goods or commodities used or supplied for this Project are in compliance with Kansas City's Buy America ordinance.

_____ By _____ _____

Contractor — Authorized Representative (Print) — Signature

Date_____

State of)
)SS
County of)

Subscribed and Sworn to before me this _____ day of _____, _____ .

My commission expires:

_____ Notary Public: _____

DESIGN PROFESSIONAL's Recommendation of Payment:

In accordance with the Contract Documents, based on on-Site observations and the data comprising this application, the DESIGN PROFESSIONAL recommends to the OWNER that to the best of the DESIGN PROFESSIONAL's knowledge, information and belief the Work has progressed as indicated, the quality of the Work is in accordance with the Contract Documents, and the CONTRACTOR is entitled to payment of the Amount above listed in this application.

Name of firm (Print)	DESIGN PROFESSIONAL (Print)	(Signature)

Date: _____

Construction/Program Manager's Recommendation of Payment: (if applicable)

In accordance with the Contract Documents, based on on-Site observations and the data comprising this application, the Construction/Program Manager recommends to the OWNER that to the best of the Construction/Program Manager's knowledge, information and belief the Work has progressed as indicated, the quality of the Work is in accordance with the Contract Documents, and the CONTRACTOR is entitled to payment of the Amount above listed in this application.

Construction/Program Manager firm (Print)	Authorized Representative (Print)	(Signature)

Date: _____

City's Representative's Agreement with Recommendation of Payment

City's Representative(print)	(Signature)	(Date)

City's Approval

The amount previously recommended is approved for payment.

Director or Designee (Print)	(Signature)	(Date)

[1]See General Conditions Article 14.02 A and B
[2]Proof of tax compliance if 1st payment and if Contract amount exceeds $150,000.00
[3]Schedule of Values–Denote any amounts currently disputed in this application. Attach additional dispute documentation if required.
[4]If requesting payment for stored materials, see General Conditions Article 14.02 A.1
[5]If final payment, current proof of tax compliance if Contract is longer than 1 year and amount exceeds $150,000.00.
[6] Per General Conditions Sec. 14.02 attach a copy of the most recent 00485.01 M/WBE Monthly Utilization Report, 00485.02 Project Workforce Monthly Report and 00485.03 Company-Wide Workforce Monthly Report CONTRACTOR has submitted to the City's Human Relations Department
[7]Applicable only if final payment

REMINDER: CONTRACTOR is responsible for meeting or exceeding the the D/M/WBE participation amounts in its Contractor Utilization Plan (CUP) as amended by any previously approved Request for Modification/Substitution. Any Change Orders or amendements modifying the amount CONTRACTOR is to be compensated will have correspondingly impacted the amount of compensation due D/M/WBEs for purposes of meeting or exceeding the Bidder/Proposer participation. CONTRACTOR is again reminded to consider the effect of any Change Order or amendment, and to submit a Request for Modification/Substitution if appropriate.

Distribution: Owner, Contractor, Construction Manager, Project Manager, Design Professional

CITY OF FOUNTAINS
HEART OF THE NATION
KANSAS CITY
MISSOURI

SCHEDULE OF VALUES

Project Number _____

Project Title _____

HRD APPROVED CUP		
MBE	WBE	DBE
$0.00	$0.00	$0.00
%	%	%

A	B	C	D	E	F	G	H	I	J	K	L	M	N	O	P	Q	R	S
SPEC SECTION	UNIT PRICE CONTRACTS			DESCRIPTION OF WORK UNIT ITEM DESCRIPTION	$ UNIT PRICE	NO. OF UNITS	$ TOTAL OR LUMP SUM	UNITS COMPLETE	$ COMPLETED WORK	$ STORED MATERIAL	$ TOTAL COMPLETED AND STORED TO DATE		TOTALS TO DATE			% AT BOTTOM	$ TOTAL PREVIOUS APPLICATIONS	$ AMOUNT THIS APPLICATION L-R
	UNIT ITEM NO.	UNIT	ESTIMATED QUANTITY								$ J+K	% J/H	$ MBE	$ WBE	$ DBE			
																P/L		
																O/L		
																N/L		

CITY OF FOUNTAINS
HEART OF THE NATION
KANSAS CITY
MISSOURI

SUBCONTRACTORS AND MAJOR MATERIAL SUPPLIERS LIST

Project Number _____ Project Title _____

From Contractor _____ To _____ Date _____

Spec. No.	Section Title	4	Firm, Address (Check box if Supplier)	Phone, FAX and e-mail	Contact

❑ Attachments:

Signed by: _____ Date _____

Distribution: ❑ Owner ❑ Contractor ❑ Construction Manager ❑ Design Professional ❑ Consultant ❑ Other

CITY OF FOUNTAINS
HEART OF THE NATION

KANSAS CITY
MISSOURI

DAILY LABOR FORCE REPORT

Project Number _____ Day _____ Date _____
Project Title _____
Contractor _____
Subcontractor _____

Weather: (Indicate if weather prevented work and why) _____
_____
_____

Shift: (circle) 5–8 hr Days 4–10 hr Days Other _____

* This report *MUST be completed and turned in* for EACH DAY until FINAL COMPLETION.

Worker's Full Legal Name	**Occupational Title or Classification Group & Skill**	**Hours Worked & Time (i.e. 10AM – 4PM)**	**Race & Gender**

I CERTIFY THAT ALL OF THE INFORMATION PROVIDED ABOVE IS TRUE AND COMPLETE.
Contractor/Subcontractor Representative:

Complete Name: (print) _____Title: (print) _____

Signature: _____ Page ____ of ____

Distribution: ❑ City Department ❑ Contractor ❑ Subcontractor ❑ Other

CITY OF FOUNTAINS
HEART OF THE NATION

KANSAS CITY
MISSOURI

CERTIFICATE OF SUBSTANTIAL COMPLETION

Project Number _____

Project Title _____

CONTRACT FOR: _____

CONTRACTOR: _____

DATE OF ISSUANCE: _____

PROJECT OR DESIGNATED PORTION SHALL INCLUDE:

The Work performed under this Contract has been reviewed and found, to the Design Professional's and/or Construction Manager's best knowledge, information and belief, to be substantially complete. Substantial Completion is the state in the progress of the Work when the Work or designated portion thereof is sufficiently complete in accordance with the Contract Documents so the Owner can occupy or utilize the Work for its intended use. The date of Substantial Completion of Project or portion thereof designated above is hereby established as _____ which is also the date of commencement of applicable warranties required by the Contract Documents, except as stated below:

A list of items to be completed or corrected is attached hereto. The failure to include any items on such list does not alter the responsibility of the Contractor to complete all Work in accordance with the Contract Documents.

CONSTRUCTION MANAGER	BY	DATE
DESIGN PROFESSIONAL	BY	DATE

The Contractor will complete or correct the Work on the list of items attached hereto within _____ days from the above date of Substantial Completion.

CONSTRUCTION MANAGER	BY	DATE
DESIGN PROFESSIONAL	BY	DATE

The Owner accepts the Work or designated portion thereof as substantially complete and will assume full possession thereof at _____ (time) on _____(date).

OWNER'S REPRESENTATIVE	BY	DATE

Distribution:
- ❑ Owner
- ❑ Contractor
- ❑ Construction Manager
- ❑ Design Professional
- ❑ Consultant _____
- ❑ Other _____

CITY OF FOUNTAINS
HEART OF THE NATION

KANSAS CITY
MISSOURI

PUNCH LIST

Project Number _____

Project Title _____

CONTRACTOR _____

From _____ Site Visit Date _____

The following items require the attention of the CONTRACTOR for completion or correction. This list may not be all-inclusive, and the failure to include any items on this list does not alter the responsibility of the CONTRACTOR to complete all Work in accordance with the Contract Documents.

Item No.	Location (Area)	Description	Correction/ Completion Date	Verification Check

❑ Attachments

Signed by: Date:

DESIGN PROFESSIONAL (Firm/In House)

Distribution:
- ❑ OWNER
- ❑ CONTRACTOR
- ❑ DESIGN PROFESSIONAL
- ❑ Consultant _____
- ❑ Other _____

CITY OF FOUNTAINS
HEART OF THE NATION

KANSAS CITY
MISSOURI

CONTRACTOR AFFIDAVIT FOR FINAL PAYMENT

Project /Contract No. _____

Project Title _____

STATE OF _____)
)SS
COUNTY OF _____)

The Undersigned, _____ of lawful
(Name)

age, being first duly sworn, states under oath as follows:

1. I am the _____ of _____who is the general
(Title) (CONTRACTOR)

   CONTRACTOR for the CITY on Project No. _____ and Project Title _____.

2. All payrolls, material bills, use of equipment and other indebtedness connected with the Work for this Project have been paid and all Claims of whatever nature have been satisfied, as required by the Contract.

3 (✓) ____Prevailing wage does not apply; or

   (✓) ____All provisions and requirements set forth in Chapter 290, Section 290.210 through and including 290.340, Missouri Revised Statutes, pertaining to the payment of wages to workmen employed on public works projects have been fully satisfied and there has been no exception to the full and complete compliance with these provisions and requirements and the Annual Wage Order contained in the Contract in carrying out the Contract and Work. CONTRACTOR has fully complied with the requirements of the prevailing wage law as required in the Contract and has attached affidavits from all Subcontractors on this Project, regardless of tier, affirming compliance with the prevailing wage law as stipulated in the Contract.

4. I hereby certify that (a) at project completion and pursuant to contractor's final request for payment, contractor achieved (_____%) Minority Business Enterprise (MBE) participation and (_____%) Women Business Enterprise (WBE) participation on this contract, and (b) listed herein are the names of all certified M/WBE subcontractors, regardless of tier, with whom I, or my subcontractors contracted.

   1. Name of MBE/WBE Firm _____
      Address _____
      _____
      Telephone Number (_____) _____
      IRS Number _____
      Area/Scope*of Work _____
      Subcontract Final Amount _____

   2. Name of MBE/WBE Firm _____
      Address _____
      _____
      Telephone Number (_____) _____
      IRS Number _____
      Area/Scope*of Work_____
      Subcontract Final Amount _____

DocuSign Envelope ID: CF07562F-6A3B-4EF2-A92A-60C48F7AB190

List additional subcontractors, if any, on a similar form and attach to the bid.

Supplier** Final Amount: _____

*Reference to specification sections or bid item number.

(✓) ____ Met or exceeded the Contract utilization goals; or
(✓) ____ Failed to meet the Contract utilization goals (attach waiver, substitution or modification); or
(✓) ____ No goals applied to this Project.

5. CONTRACTOR certifies that each Subcontractor has received full payment for its respective work in connection with the Contract.

6. If applicable, I hereby certify that (1) at project completion and pursuant to contractor's final request for payment, contractor achieved, company-wide, at least ten percent (10%) minority workforce participation and two percent (2%) women workforce participation and (2) a true and accurate copy of my final project workforce monthly report is attached. **NOTE: This paragraph is only applicable if you completed a construction contract that was estimated by the City, prior to solicitation, as requiring more than 800 construction labor hours and costing in excess of $300,000.00. If applicable you MUST attach copies of your final monthly workforce reports.**

7. This affidavit is made in behalf of the CONTRACTOR for the purpose of securing from Kansas City, Missouri, the certification of completion of the Project and receiving payment therefore.

8. If the Contract amount exceeded $150,000, CONTRACTOR has submitted proof of compliance with the City tax ordinances administered by the City's Commissioner of Revenue and has on file proof of tax compliance from all Subcontractors. If the Contract term exceeded one (1) year, CONTRACTOR has provided proof of compliance with the City tax ordinances administered by the City's Commissioner of Revenue prior to receiving final payment and has on file proof of tax compliance from all Subcontractors prior to the Subcontractor receiving final payment from CONTRACTOR.

CONTRACTOR_____

By _____
(Authorized Signature)

Title _____

On this _____ day of _____, _____, before me

appeared _____, to me personally known to be the

_____of the_____,

and who executed the foregoing instrument and acknowledged that (s)he executed the same on behalf of

_____ as its free act and deed.

IN WITNESS WHEREOF, I have hereunto set my hand and affixed my official seal on the day and year first above written.

My commission expires:

_____ _____
Notary Public

CITY OF FOUNTAINS
HEART OF THE NATION
KANSAS CITY
MISSOURI

SUBCONTRACTOR AFFIDAVIT FOR FINAL PAYMENT

Project Number _____

Project Title _____

STATE OF MISSOURI)
) ss:
COUNTY OF _____)

After being duly sworn the person whose name and signature appears below hereby states under penalty of perjury that:

1. I am the duly authorized officer of the business indicated below (hereinafter Subcontractor) and I make this affidavit on behalf of Subcontractor in accordance with the requirements set forth in Section 290.290, RSMo. Subcontractor has completed all of the Work required under the terms and conditions of a subcontract as follows:

Subcontract with: _____, Contractor

Work Performed: _____

Total Dollar Amount of Subcontract and all Change Orders: $_____

City Certified ☐MBE ☐WBE ☐DBE ☐NA
List certifications:
_____

2. Subcontractor fully complied with the provisions and requirements of the Missouri Prevailing Wage Law set forth in Sections 290.210, RSMo through 290.340, RSMo.

Business Entity Type:
(___) Missouri Corporation
(___) Foreign Corporation
(___) Fictitious Name Corporation
(___) Sole Proprietor
(___) Limited Liability Company
(___) Partnership
(___) Joint Venture
(___) Other (Specify)

Subcontractor's Legal Name and Address

_____

_____

Phone No. _____
Fax: _____
E:mail:_____
Federal ID No._____

I hereby certify that I have the authority to execute this affidavit on behalf of Subcontractor.

By: _____ _____
(Signature) (Print Name)

_____ _____
(Title) (Date)

NOTARY

Subscribed and sworn to before me this _____ day of _____, 20_____.

My Commission Expires:_____ By_____

_____ _____
Print Name Title

SECTION 01300 – SUBMITTALS

PART 1 - GENERAL

1.01 SUMMARY

A. This section provides for the submittals required by the City prior to the start of work and, as required, for the duration of the Work.

B. All submittals shall be clearly identified by reference to a specification section and/or detail drawing. Submittals shall be clear and legible and shall include sufficient presentation of the data.

C. No portion of the work requiring a shop drawing, product data or sample shall be started nor shall any materials be fabricated or installed prior to the completion of the submittal process described herein. Fabrication performed, materials purchased or on-site construction accomplished prior to completing the submittal process as defined herein shall be at the Contractor's sole risk. The City shall not be liable for any expense or delay to complete the submittal process.

1.02 RELATED SECTIONS

A. Section 00700 – General Requirements:
   1. Article 2, paragraph 2.07.B.1 – Preliminary Project Schedule.
   2. Article 2, paragraph 2.07.B.2 – Preliminary Schedule of Shop Drawings.
   3. Article 2, paragraph 2.07.B.3 – Preliminary Schedule of Values.
   4. Article 6, paragraph 6.04 – Progress Schedule.
   5. Article 6, paragraph 6.05 – Recovery Schedule.
   6. Article 6, paragraph 6.06 – Substitute and "Or-Equal" Items.
   7. Article 6, paragraph 6.15 – Safety Representative.
   8. Article 6, paragraph 6.18 – Shop Drawings and Samples.

B. Section 01015 – Specific Project Requirements.

C. Section 01335 – Document Management.

1.03 GENERAL INFORMATION

A. Definitions:
   1. Shop Drawings, product data and Samples are technical Submittals prepared by the Contractor, Subcontractor, manufacturer or Supplier and submitted by Contractor to the City/Design Professional for review and comment as a basis of the use of Equipment and Materials proposed for incorporation in the Work or needed to describe installation, operation, maintenance or technical properties, as specified in each Division of the Specifications:
      (a) Shop Drawings include custom-prepared data of all types including drawings, diagrams, performance curves, material schedules, templates, instructions and similar information.
      (b) Product data includes standard printed information on materials, products and systems; not custom-prepared for this Project, other than the designation of selections from available choices.
      (c) Samples include both fabricated and physical examples of materials, products and Work; both as complete units and as smaller portions of units of Work; either for limited visual inspection or (where indicated) for more detailed testing and analysis. Mock-ups are a special form of Samples which are too large to be handled in the specified manner for transmittal of Sample Submittals.

2. Informational Submittals are those technical reports, administrative Submittals, certificates and guarantees not defined as Shop Drawings, product data or Samples:
   (a) Technical reports include laboratory reports, tests, technical procedures, technical records and Contractor's design analysis.
   (b) Administrative Submittals are those nontechnical Submittals required by the Contract Documents or deemed necessary for administrative records. These Submittals include maintenance agreements, bonds, project photographs, physical work records, statements of applicability, copies of industry standards, project record data, schedules, security/protection/safety data and similar type Submittals.
   (c) Certificates and guarantees are those Submittals on Equipment and Materials where a written certificate or guarantee from the manufacturer or Supplier is required in the Contract Documents.

B. Quality Requirements:
   1. The Contractor shall submit Shop Drawings and Samples in accordance with Section 00700, paragraph 6.18.C Submittal Procedures.
   2. Submittals such as Shop Drawings and product data shall be of suitable quality for legibility and reproduction purposes. Every line, character and letter shall be clearly legible. Drawings shall be useable for further reproduction to yield legible hard copies.
   3. Documents submitted to the City/Design Professional that do not meet “NO EXCEPTIONS NOTED” to the specified requirements shall be subject to rejection by the City/Design Professional and upon request by the City/Design Professional, the Contractor shall resubmit documents. Submittals shall be corrected, retraced, redrawn or replaced, as may be necessary, to meet the “NO EXCEPTIONS NOTED” requirements. Contractor's failure to initially satisfy Submittal requirements will not relieve the Contractor from meeting the required schedule for Submittals.
   4. All submittals by subcontractors shall be sent directly to the Contractor for checking. The Contractor shall be responsible for their submission at the proper time to prevent delays.
   5. The Contractor shall check all subcontractors’ submittals regarding measurements, sizes, materials and details to determine and verify that they meet the requirements of the Contract Documents. Submittals found to be inaccurate or otherwise in error shall be returned to the subcontractors for correction before submission thereof.
   6. Certificates of Compliance – Where indicated in these specifications, each submittal shall include a certificate of compliance prepared by the manufacturer or Supplier of the submitted data, certifying that the item covered complies with Contract Documents. The certificate of compliance shall be a separate document and shall include identification of all deviations, if any, from the Contract Documents.

C. Submittal Completeness:
   1. The Contractor shall accept full responsibility for the completeness of each submission. When an item consists of components from several sources, the Contractor’s initial submittal on the item shall include all components.
   2. Submittals shall be complete with respect to dimensions, design criteria, materials of construction and other information specified to enable the City/Design Professional to review the information effectively.
   3. Where standard drawings are furnished which cover several variations of the general class of Equipment, each drawing shall be annotated to indicate exactly which parts of the drawing apply to the Equipment being furnished. Use hatch marks to indicate variations that do not apply to the Submittal. The use of "highlighting markers" will not be an acceptable means of annotating Submittals. Annotation shall also include proper identification of the Submittal permanently attached to the drawing.

4. Reproductions or copies of Contract Drawings or portions thereof will not be accepted as complete fabrication or erection drawings. The Contractor may use a reproduction of Contract Drawings for erection drawings to indicate information on erection or to identify detail drawing references. Whenever the Drawings are revised to show this additional Contractor information, the Design Professional's title block shall be replaced with Contractor's title block and the Design Professional's professional seal shall be removed from the drawing. The Contractor shall revise these erection drawings, as needed, for subsequent Design Professional revisions to the Contract Drawings.

D. Form of Submittals:
   1. Submittals and other Project documents shall be transmitted in electronic format and non-electronic format as specified.
   2. Electronic Format:
      (a) Transmit Submittals and Project documents utilizing:
         (i) Adobe ".pdf" files created directly from native electronic format or City-approved equal file type and format.
         (ii) Electronic submittal ".pdf" files are not to be combined files or collections of files/drawings. Each drawing document must stand alone.
         (iii) Each file will be right reading and oriented the same for all consecutive resubmissions.
         (iv) For any given Submittal, the filename and format shall be consistent for initial submission and subsequent revisions of the same. Use consistent naming convention throughout. Reference to revision or dates shall not be included in a filename.
         (v) Submittals not meeting the above criteria are subject to rejection.
      (b) Provide Project Record Documents, equipment instruction books and operating and maintenance manuals and any other documents, as required, in a file type and format approved by City.
   3. Non-electronic Format:
      (a) Selected Submittals may be provided in paper (hard copy), as well, only with advance approval of the City and using procedures specified herein.
      (b) Equipment instruction books and operating manuals shall be provided in hardcopies in addition to the specified electronic format.
      (c) See also Section 01015 – Specific Project Requirements for a list of Submittals that are to be submitted in hard copy format.

E. Transmittal of Submittals:
   1. All submittals, regardless of origin, shall be stamped with the approval of the Contractor and identified with the name and number of this Contract, Contractor's name, references to applicable specification paragraphs and Contract Drawings and version of the submittal. Each submittal shall indicate the intended use of the item in the Work. When catalog pages are submitted, applicable items shall be clearly identified and inapplicable data crossed out. The current revision, issue number and date shall be indicated on all drawings and other descriptive data. The Contractor's stamp of approval is a representation to the City and Design Professional that the Contractor accepts full responsibility for determining and verifying all quantities, dimensions, field construction criteria, materials, catalog numbers and similar data, and the Contractor has reviewed and coordinated each submittal with the requirements of the Work and the Contract Documents.

2. Electronic Submittals – The Contractor shall utilize the City's document management system as specified in Section 01335- Document Management for managing, tracking and storing documents associated with the Project. If an internet-based document management system is to be used, additional requirements are provided in Section 01335- Document Management and Section 01015 – Specific Project Requirements. The Contractor shall comply with the file protocols and procedures for the document management system.
3. Non-electronic Submittals – Paper (hard copy) submittals shall be delivered in accordance with Section 01015 – Specific Project Requirements and as specified herein.

F. Submittals Required for the Preconstruction Conference:
1. Following are the minimum required submittals to be provided by the Contractor at the pre-construction conference:
(a) General Requirements:
(i) Preliminary Project Schedule.
(ii) Preliminary Schedule of Shop Drawings.
(iii) Preliminary Schedule of Values.
(iv) Listing of Subcontractors.
(v) Project Sign Request.
(vi) Project letters to be used during the Work.
(vii) Safety Representative.
(b) Project Specific Requirements can be found in Section 01015 – Specific Project Requirements.
(c) Document Management can be found in Section 01335 – Document Management.

1.04 SHOP DRAWINGS AND SAMPLES

A. Shop Drawings:
1. Shop Drawings and engineering data covering all equipment and fabricated and building materials which will become a permanent part of the Work under this Contract shall be submitted to the City/Design Professional for review as specified herein. The data shall include drawings, descriptive information, sufficient detail to show the kind, size, arrangement and operation of component materials and devices; the external connections, anchorages and supports required; performance characteristics; and dimensions needed for installation and correlation with other materials and equipment.
2. All deviations from the Contract Documents shall be identified on each submittal and shall be tabulated in the Contractor's letter of transmittal. Such submittals shall, as pertinent to the deviation, indicate essential details of all changes proposed by the Contractor (including modifications to other facilities that may be a result of the deviation) and all required piping and wiring diagrams.

B. Product Data:
1. Product data as specified in individual Sections, include, but are not necessarily limited to, standard prepared data for manufactured products (sometimes referred to as catalog data), such as the manufacturer's product specification and installation instructions, availability of colors and patterns, manufacturer's printed statements of compliances and applicability, roughing-in diagrams and templates, catalog cuts, product photographs, standard wiring diagrams, printed performance curves and operational-range diagrams, production or quality control inspection and test reports and certifications, mill reports, product operating and maintenance instructions and recommended spare-parts listing and printed product warranties, as applicable to the Work.

2. If applicable, submittals for equipment shall include a listing of all installations where identical or similar equipment has been installed and been in operations for a period of at least one year.
3. Certificates are statements printed on the manufacturer's or supplier's letterhead and signed by responsible officials of manufacturer of product, system or material. Certifications shall provide a clear statement that the product, system or material meets the specified requirements of Contract Documents. All certificates shall be dated after the Effective Date of the contract and shall clearly indicate the project name and project number.

C. Samples:
1. Samples specified in individual Sections, include, but are not necessarily limited to, physical examples of the work such as sections of manufactured or fabricated work, small cuts or containers of materials, complete units of repetitively-used products, color/texture/pattern swatches and range sets, specimens for coordination of visual effect, graphic symbols and units of work to be used by the City/Design Professional for independent inspection and testing, as applicable to the Work.

D. Instruction Books and Operating and Manuals:
1. Contractor shall submit all Operation and Maintenance Data and Manuals as required by the Operation and Maintenance Data Specification in electronic and non-electronic form.
2. The Requirements of this specification also applies to the submittal and review of the Operation and Maintenance Data and Manuals.
3. In addition to electronic Submittals specified, non-electronic (hard copy) Equipment instruction books and operating manuals prepared by the manufacturer shall include the following:
   (a) Index and tabs.
   (b) Instructions for installation, start-up, operation, inspection, maintenance, parts lists and recommended spare parts and data sheets showing model numbers.
   (c) Applicable drawings.
   (d) Warranties and guarantees.
   (e) Address of nearest manufacturer-authorized service facility.
   (f) All additional data specified.
4. Information listed above shall be bound into hard-back binders of three-ring type. Sheet size shall be 8-1/2 x 11. Binder color shall be black. Capacity shall be a minimum of 1-1/2 inches, but sufficient to contain and use sheets with ease. Provide the following accessories:
   (a) Label holder.
   (b) Business card holder.
   (c) Sheet lifters.
   (d) Horizontal pockets.
5. The following information shall be imprinted, inserted or affixed by label on the binder front cover:
   (a) City's Name and Department name.
   (b) City's facility or plant name.
   (c) Equipment item name.
   (d) Volume number (if applicable).
   (e) Contract number.
   (f) Manufacturer's name and address.
6. The following information shall be imprinted, inserted or affixed by label on the binder spine:
   (a) Equipment item name.

(b) City's Name and Department.
(c) City's facility or plant name.
(d) Manufacturer's name.
(e) Contract number.
(f) Volume number (if applicable).

7. Submit mockup of cover and spine for the City/Design Professional's review.

E. Survey Data:
1. All field books, notes, videotapes and other data developed by Contractor in performing surveys required as part of the Work shall be available to City/Design Professional for examination throughout the construction period.
2. All such data shall be submitted to the City/Design Professional with the other documentation required for final acceptance of the Work.

1.05 CITY/DESIGN PROFESSIONAL'S REVIEW OF DRAWINGS AND DATA

A. The City/Design Professional's review of drawings and data submitted by Contractor will cover only general compliance with the Construction Contract Documents. The City/Design Professional's review does not indicate a thorough review of all dimensions, quantities and details of the material, equipment, device or item shown. The City/Design Professional's review shall not relieve Contractor of Contractor's responsibility for errors, omissions or deviations in the drawings and data, nor of sole responsibility for compliance with the Construction Contract Documents.

B. The City/Design Professional's submittal review period shall be 21 consecutive calendar days in length and shall commence on the first calendar day immediately following the date of arrival of the submittal or resubmittal in the City/Design Professional's office. The time required to mail the submittal or resubmittal back to Contractor shall not be considered a part of the submittal review period. Submittals shall be returned to the Contractor under one of the following assignments:
1. "NO EXCEPTIONS NOTED" is assigned when there are no notations or comments on the submittal. When returned, the Contractor may release the equipment and/or material for manufacture.
2. "EXCEPTIONS NOTED" is assigned when a confirmation of the notations and comments is not required by the Contractor. The Contractor may release the equipment or material for manufacture; however, all notations and comments must be incorporated into the final product.
3. "RETURNED FOR CORRECTION" is assigned when the submittal does not meet the intent of the Construction Contract Documents. The Contractor must resubmit the document revised to bring the submittal into compliance with Contract Documents. "RETURNED FOR CORRECTION" is also assigned when notations and comments are extensive enough to require a resubmittal of the package.
4. "NOT ACCEPTABLE" is assigned when the submittal does not meet the intent of the Construction Contract Documents. The Contractor must resubmit the entire package revised to bring the submittal into compliance with Contract Documents. It may be necessary to resubmit using a different manufacturer/vendor to meet the Construction Contract Documents. "NOT ACCEPTABLE" is also assigned when the notations and comments are extensive enough to require a resubmittal of the package.

C. If the Contractor considers any correction indicated on the shop drawings to constitute a change to the Contract Documents, the Contractor shall give written notice thereof to the City/Design Professional at least seven working days prior to release for manufacture.

D. Resubmittal of Drawings and Data:
   1. The Contractor shall accept full responsibility for the completeness of each resubmittal. The Contractor shall verify that all corrected data and additional information previously requested by the City/Design Professional are provided on the resubmittal. When corrected copies are resubmitted, the Contractor shall in writing direct specific attention to all revisions and shall list separately any revisions made other than those called for by the City/Design Professional on previous submissions.
   2. Requirements specified for initial submittals shall also apply to resubmittals. Resubmittals shall bear the number of the first submittal followed by a letter (A, B, etc.) to indicate the sequence of the resubmittal.
   3. Resubmittals shall be made within thirty (30) days of the date of the letter returning the submittal to be modified or corrected; unless, within 14 days, the Contractor submits an acceptable request for an extension of the stipulated period, listing the reasons the resubmittal cannot be completed within the specified time.
   4. Any need for more than one resubmission or any other delay in obtaining the City/Design Professional's review of submittals, will not entitle the Contractor to an extension of the Contract Times, unless: the delay of the Work is directly caused by a change in the Work authorized by a Change Order or by failure of the City/Design Professional to review the submittals within the submittal review period specified herein.

PART 2 - PRODUCTS

Not used.

PART 3 - EXECUTION

Not used

END OF SECTION

SECTION 01320 – CONSTRUCTION PROGRESS DOCUMENTATION

PART 1 - GENERAL

1.01 SUMMARY

A. This Section includes administrative and procedural requirements for documenting the construction process beginning with the Notice of Intent to Contract and continuing through completion of the Work performed and Construction Contract close out.

B. The Contractor shall furnish all labor, materials, equipment and incidentals as necessary to comply with these requirements including but not limited to the following and as required herein:
   1. Preliminary Project Schedule.
   2. Project Baseline Schedule.
   3. Progress Schedule.
   4. Recovery Schedules.
   5. Submittals Schedule.
   6. Daily Labor Force reports.
   7. Material location reports.
   8. Field condition reports.
   9. Special reports.
   10. Photographic Documentation.

1.02 SPECIFICATION MODIFICATIONS

A. It is understood this specification may be modified by appropriate items in Section 01015 – Specific Project Requirements.

1.03 RELATED SECTIONS

A. Drawings and general provisions of the Contract; including General and Supplementary Conditions, all applicable Division 01 Sections, and all applicable Division Sections; apply to this Section.

B. Section 00700 – General Requirements:
   1. Article 2, paragraph 2.07.B.1 – Preliminary Project Schedule.
   2. Article 2, paragraph 2.07.B.2 – Preliminary Schedule of Shop Drawings.
   3. Article 2, paragraph 2.08.A – Acceptable Schedule.
   4. Article 2, paragraph 2.08.B – Project Baseline Schedule.
   5. Article 6, paragraph 6.04 – Progress Schedule.
   6. Article 6, paragraph 6.05 – Recovery Schedule.

C. Section 01000 – General Project Requirements.

D. Section 01015 – Specific Project Requirements.

E. Section 01322 – Photographic Documentation.

1.04 CODES AND STANDARDS

A. The publications listed below form a part of this specification to the extent referenced. The publications are referred to within the text by the basic designation only.

B. American Association of Cost Engineers (AACE):
   1. Comply with recommended practices.

1.05 SUBMITTALS

A. Scheduler Qualifications – For firms and persons preparing schedules, submit qualifications as required by Table 1 to demonstrate their capabilities and experience. Include lists of completed projects with the following information:
   1. Project name.
   2. Project location.
   3. Name and address of engineer, architect or contractor for which schedules were prepared.
   4. Name and address of client.
   5. Other information and pertinent.

B. Preliminary Schedule of Shop Drawings – Arrange the following information in a tabular format:
   1. Scheduled date for each first submittal.
   2. Specification Section number and title.
   3. Submittal category (action or informational).
   4. Name of subcontractor.
   5. Description of the Work covered.
   6. Scheduled date for City's final approval.

C. Standard Schedule Format – Layout for all schedules and reports shall follow the standard format in the following order, activity ID, activity name, original duration, remaining duration, percent complete, start, finish, late start, late finish, total float, baseline variance, predecessor, successor, and resource ID.

D. Preliminary Project Schedule – Submit in native electronic format and *PDF format. PDF sheet size shall sufficiently large enough to legibly show entire schedule for entire construction period.

E. Baseline Project Schedule – Submit in native electronic format and *PDF format. PDF sheet size shall sufficiently large enough to legibly show entire schedule for entire construction period.

F. Progress Schedules – Submit in native electronic format and *PDF format. PDF sheet size shall sufficiently large enough to legibly show entire schedule for entire construction period.

G. CPM Reports – Submit concurrent with Preliminary, Baseline, and Progress Schedules.

H. Activity Report – Submit concurrent with each Progress Schedule a list of all activities sorted by activity number and early start date, or actual start date, if known.

I. Logic Report – Submit concurrent with each Progress Schedule a list of preceding and succeeding activities for all activities, sorted in ascending order by activity number and then early start date, or actual start date if known.

J. Total Float Report – Submit concurrent with each Progress Schedule a list of all activities sorted in ascending order of total float.

K. Daily Labor Force Reports – Submit concurrent with each Progress Schedule.

L. Material Location Reports – Submit concurrent with each Progress Schedule.

M. Field Conditions Reports – Submit concurrent with each Progress Schedule.

N. Special Reports – Submit special reports within one day of an occurrence.

O. Daily Construction Reports – Submit at weekly intervals.

1.06 DEFINITIONS

A. Activity:
   1. A discrete part of a project that can be identified for planning, scheduling, monitoring, and controlling the construction project. Activities included in a construction schedule consume time and resources.
   2. Critical activities are activities on the critical path. They must start and finish on the planned start and finish times.
   3. Predecessor activity is an activity that must start or complete before a given activity can be started. No negative lag is allowed.
   4. Successor activity is an activity that can not start until the predecessor activity allows it. No negative lag is allowed.

B. CPM (Critical Path Method) – A schedule network analysis technique used to determine the amount of scheduling flexibility (the amount of float) on various logical network paths in the project schedule network, and to determine the minimum total project duration. Start and finish dates are calculated by means of a forward pass, using a specified start date. Late start and finish dates are calculated by means of a backward pass, starting from a specified completion date, which sometimes is the project early finish date determined during the forward pass.

C. Critical Path – Generally, but not always, the sequence of schedule activities determining the duration of the project. Generally, it is the longest path through the project. However, a critical path can end, as an example, on a schedule milestone that is in the middle of the schedule model and that has a finish-on-or-before imposed date schedule constraint.

D. Event – The starting or ending point of an activity.

E. Float – The measure of leeway in starting and completing an activity. Float time is not for the exclusive use or benefit of either City or Contractor, but is a jointly owned, expiring Project resource available to both parties as needed to meet schedule milestones and Contract completion date. Free float is the amount of time an activity can be delayed without adversely affecting the early start of the following activity. Total float is the measure of leeway in starting or completing an activity without adversely affecting the planned Project completion date.

F. Fragnet – A partial or fragmentary network that breaks down activities into smaller activities for greater detail.

G. Gantt Chart – A graphic display of schedule-related information. In the typical Gantt chart, schedule activities or work breakdown structure components are listed down the left side of the chart, dates are shown across the top and activity durations are shown as date-placed horizontal bars. Also known as a Bar chart.

H. Lag – An offset or delay from an activity to its successor. It is based on the calendar of the successor activity.

I. Major Area – A significant construction element.

J. Major Procurement – As discussed in Section 00700, paragraph 2.07.B.1, Major Procurement shall further defined as any materials that fall within the critical path and/or have a lead time of 30 days or greater.

K. Milestone – A key or critical point in time for reference or measurement.

L. Network Diagram – A graphic diagram of a network schedule, showing activities and activity relationships.

M. Schedule Level – A project team specified rule for the relative granularity of schedule activities in an overall schedule model. Following are the descriptions and levels of detail for each schedule level:

1. Level 1 - Project Summary Schedule – This is a summary level schedule that highlights major project activities, milestones and key deliverables.
2. Level 2 - Project Phase Summary Schedule – This is a more extensive summary level schedule that includes all information from the Level 1 schedule and breaks down the project into major components by area or phase.
3. Level 3 - Detail Schedule – This level will show detail plans to accomplish. Procurement, Construction, Testing and Start-up. Such schedules will have logical relationships integrated between the activities and organized in such a manner to create a Critical Path and facilitate critical path analysis. It will include all milestones and major elements and will be used to support monthly progress reporting.
4. Level 4 - Detailed Schedule by Work Package – This level will include detailed information by each work package and display all activities to be accomplished by the workforce with durations of 7 or more calendar days.
5. Level 5 - Detailed Schedule by Task – This level of detail will support the short-term planning for the field, normally for those activities of less than 1-week duration. It is used for workforce supervisors to plan and coordinate work at the detail level.

N. WBS (Work Breakdown Structure) – A deliverable-oriented hierarchical decomposition of the work to be executed by the project team to accomplish the project objectives and create the required deliverables. It organizes and defines the total scope of the project. Each descending level represents an increasingly detailed definition of the project work. The WBS is decomposed into work packages. The deliverable orientation of the hierarchy includes both internal and external deliverables. See also Schedule Levels.

O. Work Package – A deliverable or project work component at the lowest level of each branch of the WBS. The work package includes the schedule activities and schedule milestones required to complete the work package deliverable or project work component.

P. Schedule of Monthly Payments – Estimated monthly progress payments based on Baseline Schedule and Schedule of Values for each Month for the duration of the project.

1.07 COORDINATION

A. Coordinate preparation and processing of schedules and reports with performance of construction activities including the scheduling and reporting of separate Contractors performing construction activities related to project.

B. Coordinate Progress Schedules with the Schedule of Values, to estimate a Schedule of Monthly Payments, list of subcontractors, Preliminary Schedule of Shop Drawings and Samples, progress reports, Application for Payment, and other required schedules and reports.

C. Secure time commitments for performing critical elements of the Work from parties involved. Time commitments should be captured within the schedule.

1.08 SCHEDULE LEVEL

A. The Schedule Level (see paragraph 1.06M~~4.L~~) to be used for this project shall be as specified in Section 01015 – Specific Project Requirements.

B. If a Recovery Schedule is deemed necessary by the City in accordance with Section 00700 – General Conditions, it shall be developed as a Schedule Level 5 regardless of the requirements listed in Section 01015 – Specific Project Requirements.

1.09 SCHEDULING SOFTWARE

A. Prepare schedules using the latest version of Primavera version P6 or higher or Microsoft Project. See Section 01015 – Specific Project for additional or specific software requirements.

1.10 PRELIMINARY SCHEDULE OF SHOP DRAWINGS AND SAMPLES

A. Preparation – Provide a schedule of submittals arranged in chronological order by date required by the construction schedule. Include time required for review, resubmittal, ordering, manufacturing, fabrication, and delivery as set forth in the Contract Documents, when establishing dates.

B. Coordinate Submittals Schedule with list of subcontracts, the Schedule of Values, the estimated Schedule of Monthly Payments, and Progress Schedules.

C. Include Shop Drawing and Sample Submittals required during the first 60 days of construction. List those required to maintain orderly progress of the Work and those required early because of long lead time for manufacture or fabrication.

D. At Contractor's option, show submittals on the Preliminary Progress Schedule, instead of tabulating them separately.

1.11 SCHEDULE REQUIREMENTS

A. Requirements According to Schedule Level – Contractor shall provide the following information based in the Schedule Level defined in Section 01015 – Specific Project Requirements. An "X" indicates that the requirement is applicable to the Schedule Level.

Table 1. Schedule Requirements

Item	Requirement	Schedule Level				
		1	2	3	4	5
Procedures	Comply with procedures contained the American Association of Cost Engineers (AACE) recommended practices.	X	X	X	X	X
Time Frame	Extend project schedule from date established for the Notice to Proceed to the date of Final Completion.	X	X	X	X	X
Contract Times	Contract Times shall not be changed unless specifically authorized by Change Order.	X	X	X	X	X
Activities	Treat separate major areas as a separate numbered activity for each principal element of the Work. (WBS)	X	X	X	X	X
Activity Duration	Define activities so none is longer than 20 days, unless specifically allowed by City	X	X	X	X	X
Milestones	Include milestones indicated in the Contract Documents in schedule, including, but not limited to, the Notice to Proceed, Substantial Completion, and Final Completion.	X	X	X	X	X

Table 1. Schedule Requirements

Item	Requirement	Schedule Level				
		1	2	3	4	5
Computer Software	Prepare schedules using the latest version of Primavera version P6 or higher or Microsoft Project. Refer to Section 01015 for project specific requirements.		X	X	X	X
Scheduler's Qualifications	Submit scheduler's qualifications for review and approval			X	X	X
Submittal Review Time	Include review and re-submittal times for review of Shop Drawings and Samples. Each item listed in the Preliminary Schedule of Shop Drawings and Samples shall be included in the schedule.			X	X	X
Procurement Activities	Include separate activities for the procurement process of long-lead and major items that require a cycle of more than 30 days or fall within the critical path. Procurement cycle activities include, but are not limited to, submittals, approvals, purchasing, fabrication, and delivery.			X	X	X
Startup and Testing Time	Include not less than two days for startup and testing.			X	X	X
Constraints	Include constraints and work restrictions indicated in the Contract Documents and as follows in schedule, and show how the sequence of the Work is affected.		X	X	X	X
Phasing	Arrange list of activities on schedule by phase.		X	X	X	X
Work by City	Include a separate activity for each area of the Work performed by City.		X	X	X	X
Products Ordered in Advance	Include a separate activity for each product. Delivery dates indicated stipulate the earliest possible delivery date.		X	X	X	X
City-Furnished Products	Include a separate activity for each product. Delivery dates indicated stipulate the earliest possible delivery date.		X	X	X	X
Work Restrictions	Show the effect of the following items on the schedule: • Coordination with existing construction. • Limitations of continued occupancies. • Uninterruptible services. • Partial utilization before Substantial Completion. • Use of premises restrictions. • Provisions for future construction. • Seasonal variations. • Environmental control.			X	X	X
Work Stages	Indicate important stages of construction for each major portion of the Work, including, but not limited to, the following: • Subcontract awards. • Submittals. • Purchases. • Fabrication. • Sample testing. • Deliveries. • Installation. • Tests and inspections.			X	X	X

Table 1. Schedule Requirements

Item	Requirement	Schedule Level				
		1	2	3	4	5
	• Adjusting. • Curing. • Startup and placement into final use.					
Area Separations	Identify each major area of construction for each major portion of the Work. Indicate where each construction activity within a major area must be sequenced or integrated with other construction activities: • Contractor Mobilization* • Procurement – Divided by Long Lead and Short Lead • Completion of civil work • Completion of structural work • Completion of mechanical installation • Completion of electrical installation • Partial Utilization • Substantial Completion* • Achievement of Full Operations* • Punch List and Final Corrections* • Final Completion* *Required element, all others to be used as applicable based on project scope.			X	X	X
Contract Modifications	For each proposed contract modification and concurrent with its submission, prepare a time-impact analysis using fragments to demonstrate the effect of the proposed change on the overall project schedule.		X	X	X	X
Work under More than One Contract or Subcontract.	Include a separate activity for each contract or subcontract.			X	X	X
Detailed by Work Package	Include detailed information by each work package and display all activities to be accomplished by the workforce with durations of 7 or more calendar days				X	X
Detail by Task	Include detail by task to support the short-term planning for the field, normally for those activities of less than 1-week duration.					X

B. Cost Correlation:
   1. Requirement to provide a Cost Correlation shall be as indicated in Section 01015 – Specific Project Requirements.
   2. At the head of schedule, provide a cost correlation line, indicating planned and actual costs. On the line, show dollar volume of the Work performed as of dates used for preparation of payment requests.

1.12 PRELIMINARY AND BASELINE PROJECT SCHEDULES

A. Indicate each significant construction activity separately. Identify each Monday of each week with a continuous vertical line. Outline significant construction activities for the first 60 days of construction. Include skeleton diagram for the remainder of the Work.

B. Preliminary Network Diagram – Outline significant construction activities for the project. To be submitted with the Preliminary Progress Schedule.

1.13 PROGRESS SCHEDULES

A. General – Prepare Progress Schedules using a CPM network analysis diagram.

B. CPM Schedule Preparation – Prepare a list of all activities required to complete the Work. Using the preliminary network diagram, prepare a skeleton network to identify probable critical paths:

1. Activities – Indicate the estimated time duration, sequence requirements, and relationship of each activity in relation to other activities. Include estimated time frames for the following activities:
   (a) Preparation and processing of submittals.
   (b) Purchase of materials.
   (c) Delivery of materials and equipment.
   (d) Fabrication.
   (e) Installation.
2. Processing – Process data to produce output data or a computer-drawn, time scaled network. Revise data, reorganize activity sequences, and reproduce as often as necessary to produce the CPM schedule within the limitations of the Contract Time.
3. Format – Mark the critical path. Locate the critical path near center of network; locate paths with most float near the edges:
   (a) Sub-networks on separate sheets are permissible for activities clearly off the critical path. Develop network diagram in sufficient time to submit CPM schedule so it can be accepted for use no later than 30 days after date established for the Notice to Proceed.
   (b) Establish procedures for monitoring and updating CPM schedule and for reporting progress monthly. Coordinate procedures with progress meeting and payment request dates.
   (c) Use "one calendar day" as the unit of time.
4. Initial Issue of Schedule – Prepare initial network diagram from a list of straight "early start-total float" sort. Identify critical activities. Prepare tabulated reports showing the following:
   (a) Contractor or subcontractor and the Work or activity.
   (b) Description of activity.
   (c) Principle events of activity.
   (d) Immediate preceding and succeeding activities.
   (e) Early and late start dates.
   (f) Early and late 'finish dates.
   (g) Activity duration in days.
   (h) Total float or slack time.
   (i) Average size of workforce.
5. Schedule Updating – Concurrent with making revisions to schedule, prepare tabulated reports showing the following:
   (a) Identification of activities that have changed added or deleted.
   (b) Changes in logic ties.
   (c) Changes in early and late start dates.
   (d) Changes in early and late finish dates.
   (e) Changes in activity durations in days.
   (f) Changes in the critical path.
   (g) Changes in total float or slack time.
   (h) Changes in the Contract Time.

6. Value Summaries – Prepare two cumulative value lists, sorted by finish dates:
   (a) In first list, tabulate activity number, early finish date, dollar value, and cumulative dollar value.
   (b) In second list, tabulate activity number, late finish date, dollar value, and cumulative dollar value.
   (c) In subsequent issues of both lists, substitute actual finish dates for activities completed as of last date.
   (d) Prepare list for ease of comparison with payment requests; coordinate timing with progress meetings.
   (e) In both value summary lists, tabulate "actual percent complete" and "cumulative value completed" with total at bottom.
   (f) Submit value summary printouts one week before each regularly scheduled progress meeting.

C. Reports:
   1. Daily Labor Force Reports – Prepare a daily labor force report recording the following information concerning events at Project site:
      (a) List of subcontractors at Project site.
      (b) List of separate contractors at Project site.
      (c) List of all the Contractor's and subcontractor's personnel showing hours worked in labor class at Project site.
   2. Material Location Reports – At monthly intervals, prepare a comprehensive list of materials delivered to and stored at Project site. List shall be cumulative, showing materials previously reported plus items recently delivered. Include with list a statement of progress on and delivery dates for materials or items of equipment fabricated or stored away from Project site.
   3. Field Condition Reports – Immediately on discovery of a difference between field conditions and the Contract Documents, prepare a detailed report. Submit electronically and directly to City with a request for information. Include a detailed description of the differing conditions, together with recommendations for changing the Contract Documents.

D. Special Reports:
   1. General – Submit special reports within one day of an occurrence.
   2. Reporting Unusual Events – When an event of an unusual and significant nature occurs at Project site, whether or not related directly to the Work, prepare and submit a special report. List chain of events; persons participating; response by Contractor’s personnel; evaluation of results or effects; and similar pertinent information. Advise City in advance when these events are known or predictable.

PART 2 - PRODUCTS

Not used.

PART 3 - EXECUTION

3.01 PROGRESS SCHEDULES

A. Updates – At monthly intervals, update schedule to reflect actual construction progress and activities. Progress Schedule should be provided for review and approval prior to monthly pay request. Progress Schedules will be reviewed and discussed at regularly schedule progress meetings. Contractor shall bring printed copies of CPM Schedule:

1. Revise schedule immediately after an activity revision has been recognized or made at the direction by the City. Issue updated schedule concurrently with the report of each such progress meeting.
2. Include a report with updated schedule that indicates every change, including, but not limited to, changes in logic, durations, actual starts and finishes, and activity durations.
3. As the Work progresses, indicate actual completion percentage for each activity.
4. Post copies in Project meeting rooms and temporary field offices.

END OF SECTION

CITY OF FOUNTAINS
HEART OF THE NATION

KANSAS CITY
MISSOURI

DAILY FIELD OBSERVATION REPORT

Project/Contract Number 80002336/9663

Project Title Water Main Replacement in the Area of College Avenue to Norton Avenue from E 21st Street to E 31st Street

Contractor _____

Report Number _____ Date _____ Time _____

Weather			Site Conditions		Day	
❑ Clear	❑ Snow	❑ Warm	❑ Clear	❑ Dusty	❑ Monday	❑ Thursday
❑ Overcast	❑ Foggy	❑ Hot	❑ Muddy	❑ _____	❑ Tuesday	❑ Friday
❑ Rain	❑ Cold	❑ Temperature Range _____			❑ Wednesday	❑ _____

Persons Contacted:

Work Observed:

Items Discussed:

Materials Delivered:

Requested Revisions or Interpretations:

Nonconforming Work Reported This Date To Contractor:

Remarks:

❑ Attachments

Signed by: Date:

Distribution: ❑ Owner
❑ Contractor
❑ Construction Manager
❑ Design Profes
s
ional
❑
C

o
n
s
ultant ____
❑ Ot
h
e
r
_____

CITY OF FOUNTAINS
HEART OF THE NATION

KANSAS CITY
MISSOURI

PERIODIC FIELD OBSERVATION REPORT

Project Number _____

Project Title _____

Contractor _____

Report Number _____ Date _____ Time _____

Weather			Site Conditions		Day	
❑ Clear	❑ Snow	❑ Warm	❑ Clear	❑ Dusty	❑ Monday	❑ Thursday
❑ Overcast	❑ Foggy	❑ Hot	❑ Muddy	❑ _____	❑ Tuesday	❑ Friday
❑ Rain	❑ Cold	❑ Temperature Range _____			❑ Wednesday	❑ _____

Persons Contacted:

Work Observed:

Items Discussed:

Remarks:

❑ Attachments

Signed by: Date:

Distribution:
- ❑ Owner
- ❑ Contractor
- ❑ Construction Manager
- ❑ Design Professional
- ❑ Consultant _____
- ❑ Other _____

CITY OF FOUNTAINS
HEART OF THE NATION

KANSAS CITY
MISSOURI

WEEKLY REPORT OF WORKING DAYS

Project Number _____

Project Title _____

Contractor _____

Report Number _____ Week Ending: _____

DATE:	WORKING DAY	REMARKS

TOTAL THIS WEEK	PREVIOUSLY	TOTAL TO DATE	WORKING DAYS IN CONTRACT	REMAINING OR OVERTIME

Signed by OWNER'S REPRESENTATIVE Date:

Signed by CONTRACTOR Date:

Distribution: ❑ OWNER ❑ CONTRACTOR ❑ Construction Manager ❑ Design Professional ❑ Consultant ❑ Other

SECTION 01322 – PHOTOGRAPHIC AND VIDEO DOCUMENTATION

PART 1 - GENERAL

1.01 SUMMARY

A. This Section outlines the requirements for photographic and video documentation. The Contractor is solely responsible for the development of an overall plan to fully document Site conditions and the progress of the Work.

B. The Contractor shall hire a professional photographer to provide the services and deliverables described herein.

C. This section does not include work associated with internal closed-circuit television (CCTV) inspections of sewer gravity pipes. See Section 02686 – CCTV Inspection of Sewer Mains.

1.02 SPECIFICATION MODIFICATIONS

A. It is understood that throughout this section these Specifications may be modified by appropriate items in Section 01015 – Specific Project Requirements or as otherwise indicated in the contract documents.

1.03 RELATED SECTIONS

A. Section 00700 – General Conditions.

B. Section 01015 – Specific Project Requirements.

C. Section 01300 – Submittals.

D. Section 01320 – Construction Progress Documentation.

E. Section 01335 – Document Management.

F. Section 02686 – CCTV Inspection of Sewer Mains.

1.04 DEFINITIONS

A. Pre-Construction Video: A video taken to document Site conditions prior to the start of construction.

B. Pre-Construction Photographs: Photographs taken to document Site conditions prior to the start of construction. All Pre-Construction Photographs shall be digital, indexed on an interactive map and shown on a View Location Map.

C. Construction Progress Photographs: Digital photographs taken to document the progress of construction.

D. Construction Activity Photographs: Digital photographs taken to document specific construction activities.

E. Post-Construction Photographs: Digital photographs taken after final restoration to document the finished condition of the Site.

F. Affidavit of Authenticity: The photographer's signed and notarized affidavit, attesting to the production of the original photographs, videos and their authenticity.

1.05 SUBMITTALS

A. Submit as specified in Section 01300 – Submittals.

B. Other required Submittals:

1. Photographer's Qualifications: Submit for review and approval the qualification information demonstrating the photographer meets the requirements of paragraph 1.06 of this Section.
2. Phasing Plan: If applicable, submit for review and approval a phasing plan for Pre-Construction Photographs and Videos.

3. Pre-Construction Photographs: Submit for review and approval digital pre-construction photographs with an interactive index map, Photograph Navigation System (see paragraph 2.05 of this Section) and affidavit of authenticity.
4. Pre-Construction Video: Submit for review and approval a pre-construction video with a Video Navigation System (see paragraph 2.05 of this Section) and affidavit of authenticity (see paragraph 1.04 of this Section).
5. Construction Progress Photographs: On a monthly basis, submit digital construction photographs, interactive index map and affidavit of authenticity.
6. Construction Activity Photographs: On a monthly basis, submit digital activity photographs (if different than progress photographs), interactive index map and affidavit of authenticity.
7. Post-Construction Photographs/Video: Submit for review and approval digital post-construction photographs or video, interactive index map and affidavit of authenticity.

1.06 QUALITY ASSURANCE

A. The Contractor is responsible for the quality assurance and quality control of the Work.
B. General Quality: Photographs and video shall be clear and of sufficient quality to show relevant detail. They shall not be blurred, taken in shadow or too far away to provide conclusive information. The City may require that the photographs or video be retaken should the quality be insufficient. Costs for such re-takes are the Contractor's sole responsibility and shall be done at no extra cost to the City.
C. Qualifications of Photographer: The Contractor shall engage the services of a professional photographer with a minimum of 3 years of experience in construction photography to document the conditions of the project site. Upon request, samples of the photographer's prior work and/or references shall be submitted.
D. Affidavit of Authenticity: The Contractor shall provide the photographer's signed and notarized affidavit, attesting to the production of the original photographs, videos and their authenticity. An affidavit of authenticity shall be provided with each submittal/deliverable.

1.07 MINIMUM REQUIREMENTS

A. The section specifies several different sets of photographic and video documentation requirements. The extent of documentation will depend upon the size and type of the project. The following table summarizes the basic documentation requirements.

Table 1. Summary of Requirements

Set of Documentation	Mandatory	As Required by Section 01015
Pre-Construction Video		✓
Haul Route Video		✓
Pre-Construction Photographs	✓	
Interactive Index Map		✓
Construction Progress/Activity Photographs		✓
Post-Construction Photographs/Video		✓

1.08 OWNERSHIP

A. The photographs and videos shall become the sole property of the City.

1.09 SCHEDULES

A. Schedule of Values: Photographic/Video documentation shall be listed as one line item in the Schedule of Values.

B. Construction Progress Documentation: Each set of photographs or videos shall be listed in the Preliminary Project Schedule as a discrete activity. See Section 01320 – Construction Progress Documentation.

1.10 PHASING

A. Based on the nature and scope of the Work, the Contractor may phase the Pre-Construction Photographs and Video. If phasing is to be implemented, the following shall apply:
   1. The Contractor shall submit a Phasing Plan that identifies each area of the Work.
   2. For each phase, Pre-Construction Photographs and Videos shall be taken within 21 days of the start of construction activities unless otherwise approved in writing by the City/Design Professional.

B. Under no circumstances shall construction begin in any area until the Pre-Construction Photographs and/or Video have been submitted and approved by the City/Design Professional.

PART 2 - PRODUCTS

2.01 PHOTOGRAPH QUALITY

A. Photographic images shall be captured in digital format, with a minimum of 10-megapixel resolution and taken without JPG compression.

B. Each photograph shall include a date/time stamp in the image, showing when the image was taken.

2.02 VIDEO QUALITY

A. All video recordings shall be captured in full 1080-dpi Hi-Definition digital format, without compression or file-reduction whether applied in-camera or after capture during editing.

B. The original video segments shall be retained in the format captured in camera (such as MP4 or MTS for Canon HD Video) without compression or modification that would reduce resolution or quality. The video shall include a date/time stamp in the image, showing when the image was taken. Video shall include verbal description and narrative of what is being captured.

2.03 METADATA

A. Digital files for photographs and videos shall, at a minimum, contain the following metadata:
   1. Project Name.
   2. Date and Time Taken.
   3. All other metadata inherently provided by the camera/video equipment.

2.04 MEDIA LOG

A. The Contractor shall maintain a media log (photographs and videos) for the project. The log shall include, but is not limited to, the following information for each photograph and/or video:
   1. Project Name.
   2. Project Number.
   3. Contract Number.
   4. Name of City and Department.

5. Name of Contractor.
6. Name of Design Professional.
7. Photograph file name (the specific format should be tied to the project name). Photograph file name shall be unique to each digital file and shall be embedded in the digital image in a manner that is permanent and clearly legible when the file is opened.
8. Include a date designator in file names.
9. Date the photograph was taken.
10. The name of the photographer who took the photograph.

2.05 PHOTOGRAPH AND VIDEO NAVIGATION SYSTEM

A. If specified in Section 01015 – Specific Project Requirements, the Contractor shall provide an electronic photographic and video navigation system (navigation system) for searching and viewing recorded imagery.

B. Interactive Index Map: The navigation system shall indicate the general location of each area photographed or video recorded using icons and other suitable mark-ups on the actual construction drawings in PDF-format.

C. The navigation system shall utilize standard PDF-reader software (such as Adobe Reader, Acrobat, or Bluebeam Vu) or other software that shall be included with the deliverables. Icons shall be individually hyperlinked to the respective photograph, video, affidavit of authenticity and media log file for immediate playback in Windows Media Player, VLC or other players.

D. The navigation system shall include the following:
   1. Project Name.
   2. Project Number.
   3. Contract Number.
   4. Name of City.
   5. Name of Contractor.
   6. Name of Design Professional.
   7. Ranges of dates for which the photographs or videos were taken.
   8. The name of the photographer.
   9. Affidavit of Authenticity.
   10. Media Log.
   11. Photographs.
   12. Videos.

E. A navigation system shall be provided for each set of photographs and videos taken.

PART 3 - EXECUTION

3.01 PRIOR TO PHOTOGRAPHIC AND VIDEO DOCUMENTATION

A. Construction Limits: Prior to the Pre-Construction Photographs and Video, the Contractor shall flag or mark the construction limits and excavation areas for identification, and project centerlines shall be physically marked with survey stakes and/or high visibility paint (including station numbers).

B. Mark Utilities: Prior to the Pre-Construction Photographs or Video, the Contractor shall notify utilities and have them marked so that utility locations are documented.

C. Coordinate with City: For any work that requires a representative of the City to be present, the Contractor shall provide the City a minimum of 2 days' notice.

3.02 PRE-CONSTRUCTION VIDEO

A. If specified in Section 01015 – Specific Project Requirements, the Contractor shall provide a pre-construction video.

B. Scope: Prior to the start of construction, the Contractor shall prepare a color video recording with audio of all the areas to be affected by construction. All pre-construction video recordings shall have sufficient detail to reveal the condition (including defects and damage) of all existing features, such as pavement, driveways, culverts, inlets, sidewalks, landscaping, vegetation, creek banks, trees, structures, foundations and other such items along the construction route and in the immediate adjacent areas, which might be affected by the construction operations. In addition, the videographer shall move beyond the construction zone as needed to ensure documentation of features and areas that may not be adequately recorded from the centerline rotations. Videos shall be taken on both sides of the street when construction is in or along a roadway (use this approach along drainage channels and in other similar situations).

C. Schedule: Taken after utilities have been marked and prior to the placement of materials or equipment on the Site. Videos shall be submitted to the City for review and approval. Under no circumstances shall construction begin until the pre-construction video has been submitted and approved.

D. The pre-construction video recording shall be done in the presence of a representative of the City.

E. The Contractor shall document all pre-existing site conditions/elements of the Site, the same as listed for the Pre-construction Photographs.

F. The video documentation shall provide a clear and continuous view of the project showing all visible utilities and features within the limits of construction.

G. To preclude the possibility of tampering or editing in any manner, all video recordings shall, by electronic means, generate and display continuously and simultaneously on the screen or in the video file metadata properties digital information to include the date and time of recording. The time information shall consist of hours, minutes and seconds, separated by colons (i.e., 10:35:18).

H. The audio/video recording shall consist of one video and one audio track which shall be recorded simultaneously. All tracks shall consist of the original live recordings and thus shall not be copies of other audio or video recordings.

I. The audio track shall contain the narrative commentary. Ample descriptive narrative shall be recorded simultaneously during all recordings. Narration shall include clearly audible comments that will deliver station number and/or street address, locations, direction of view and rotation.

J. Typical video segments should not exceed 10 minutes in length.

K. Rotations of 360-degrees shall be at the beginning and end of each video segment and at each 100 foot increment throughout the video.

L. The rate of speed in the general direction of travel of the conveyance used during recording shall be controlled to provide a usable image. On average, the rate of forward travel during videotaping shall not be less than fifteen minutes for every 1000 linear feet of pipeline route or street centerline; slower rates shall be utilized in residential/commercial areas.

M. Panning rate, zoom-in rate and zoom-out rate shall be controlled sufficiently such that playback will provide clarity of the object viewed.

N. All recording shall be done during times of good visibility. No recording shall be done during periods of precipitation unless authorized by the City.

3.03 HAUL ROUTE VIDEO

A. If specified in Section 01015 – Specific Project Requirements, the Contractor shall provide pre-construction video documentation of all haul routes associated with the Project.
B. Haul route videos shall be made at the time of the Pre-Construction Photographs.
C. Haul Route Videos shall meet the requirements of the paragraph PRE-CONSTRUCTION VIDEO as well as the following:
   1. Haul routes shall be recorded during daylight hours and during good weather conditions.
   2. Video equipment may be mounted on a vehicle. The speed of the vehicle while recording shall not be more than 5 miles per hour (mph). If traffic or safety concerns prohibit driving 5 mph then the video shall be taken while walking the route.
   3. No audio/narrative commentary is required for the haul route video.

3.04 PRE-CONSTRUCTION PHOTOGRAPHS

A. The Contractor shall provide pre-construction photographs as specified in this Section and as specified in Section 01015 – Specific Project Requirements.
B. Scope: The purpose for pre-construction photo documentation is to record existing conditions, damage and features on or adjacent to the project site. The principal reason for obtaining photographs is so that items such as cracked curbs, broken pavement, sidewalks, plugged culverts, driveway conditions, lawn conditions and other existing conditions located in the Project Site may be clearly shown and documented. This will to some degree mitigate the possibility of post-construction restoration issues with property owners in the Project area.
C. Schedule: Take photographs after utilities have been marked, prior to placement of materials or equipment on the Site and prior to the start of construction activities in an area. Photographs shall be submitted to the City for review and approval. Under no circumstances shall construction begin until the pre-construction photographs have been submitted and approved.
D. Pre-construction photographs shall be taken at sufficient intervals to be able to carefully document the pre-construction conditions of the Site and in no case more than 50-foot intervals along the street, right-of-way, drainage easement and water/wastewater line route before commencement of the Work.
E. In addition, select photographs shall be taken as needed along the construction limits, and of adjacent properties, to ensure documentation of features and areas that may not be adequately recorded in the centerline rotations. Photographs shall be taken along both sides of the street when construction is in or along a roadway.
F. Overlapping composition techniques shall be employed to ensure maximum photographic coverage.
G. Pre-construction photographs shall be taken after the utility locations have been marked.
H. Pre-construction photographs shall be taken with a representative of the City present unless otherwise authorized by the City.
I. All Pre-Construction Photographs shall have sufficient detail to reveal the condition (including defects and damage) of all existing features, such as pavement, driveways, culverts, inlets, sidewalks, landscaping, vegetation, creek banks, trees, structures, foundations and other such items along the construction route, and adjacent areas which might be affected by the construction operations. An identifier such as house or business address/signs, property numbers, mail boxes, landscaping, etc… shall be included when practical in each view for ease of identification.
J. At a minimum, pre-construction photographs must be taken of the following views:
   1. The entire street right of way and limits of construction; whichever is greater.
   2. The entire easement width and length (both permanent and temporary).

3. All curb lines (both sides of street) – all pre-existing curb damage not called for replacement within the Work and shall include major cracks.
4. All driveways, steps, and curbs and curb ramps (both sides of street).
5. Fence and gate conditions.
6. Trees, ornamental shrubs, plantings/planter boxes and evidence of irrigation features.
7. Other privately or publicly owned features or facilities that might be disturbed by the construction.
8. Views of structures, both inside and adjacent to the project site and easements in areas where the Contractor will be working within five (5) feet of said structure.
9. Prominent utility features, such as: guy wires, poles, signs, valves, fire hydrants, meters, pull boxes, etc.
10. Streams and stream banks within the limits of construction.
11. At the discretion of the Contractor, photograph offsite roadways that will be subjected to heavy usage such as for haul routes or delivery of heavy components or equipment. Refer to Paragraph HAUL ROAD VIDEO for additional requirements.
12. Other significant or prominent features to protect the City and the Contractor following construction (e.g. close-up photographs of pre-existing broken curbs, cracked/failed pavement, damaged adjacent retaining walls, etc.).
13. Views of structures, both inside and adjacent to the ROW/easement in areas where the Contractor will be working within five (5) feet of said structure.
14. Other views as requested by the City.

3.05 CONSTRUCTION PROGRESS PHOTOGRAPHS

A. If specified in Section 01015 – Specific Project Requirements, the Contractor shall provide Construction Progress Photographs.
B. Scope: The Contractor shall provide construction progress photographs to depict the progress of the work. The Contractor shall be responsible for photographs of the Site to show the existing and general progress of the Work. The City will advise as to which views are of interest.
C. Schedule: Photographs shall be taken at the time of the Pre-construction Photographs, a minimum of once per month throughout the duration of the Project, and at the time of the Post Construction Photographs. Construction Progress Photographs are to be submitted each month with the Contractor's Application for Payment. Applications for Payment was not be considered acceptable until the photographs are provided.
D. This set of photographs will be taken as close as possible to the same locations and views of the pre-construction photography.

3.06 CONSTRUCTION ACTIVITY PHOTOGRAPHS

A. If specified in Section 01015 – Specific Project Requirements, the Contractor shall provide Construction Activity Photographs.
B. Scope: The Contractor shall provide photographs taken to document Site conditions and specific construction activities throughout the duration of the Project.
C. Schedule: Photographs shall be taken two times per month (every two weeks) for the duration of the Project.
D. Construction Activity Photographs are to be submitted each month with the Contractor's Application for Payment.
E. Photographs shall be taken to depict the work accomplished during the month. These photographs are to include, but are not limited to, the following:
   1. Work not yet covered up.
   2. When mechanical, electrical, plumbing or building inspections are scheduled.

3. The beginning of installation of major items of equipment.
4. After installation of major items of equipment.
5. Other significant construction activities.
6. As directed by the City.

3.07 POST-CONSTRUCTION PHOTOGRAPHS

A. If specified in Section 01015 – Specific Project Requirements, the Contractor shall provide Post-Construction Photographs.

B. Scope: The Contractor shall provide Post-Construction Photographs of the project area that documents the final restoration and construction improvements. Post-Construction photographs shall show the general condition of the construction zone (recording finished landscape and other restoration, plus construction improvements), and other areas that may have been affected by construction activities.

C. Schedule
   1. Photographs shall be taken after completion of the Substantial Completion punch list when the project is complete, the Site is restored to the satisfaction of the City, and before submission of the Application for Final Payment.
   2. Post-construction photographs shall be taken after all items have been address from the Substantial Completion inspection, after cleanup and site restoration, and before application for final payment.

D. Post-Construction Photographs are to be submitted with the Contractor's Application for Final Payment.

E. The Contractor shall coordinate the schedule of the post-construction photographs with the City's Project Manager and shall provide at least 5 days written notice to allow the City's Representative to be present when the photographs are taken.

3.08 POST-CONSTRUCTION VIDEO

A. If specified in Section 01015 – Specific Project Requirements, the Contractor shall provide a Post-Construction Video.

B. Scope: The Contractor shall prepare a color video recording with audio of all the areas affected by construction. All Post-Construction video recordings shall have sufficient detail to reveal the final, restored condition of all existing features, such as pavement, driveways, culverts, inlets, sidewalks, landscaping, vegetation, creek banks, trees, structures, foundations, and other such items along the construction route, and in the immediate adjacent areas, which might have been affected by the construction operations. In addition, videographer shall move beyond the construction zone as needed to insure documentation of features and areas that may not be adequately recorded from the centerline rotations. Videos shall be taken on both sides of the street when construction is in or along a roadway (use this approach along drainage channels and in other similar situations).

C. Schedule: The post-construction video shall be taken in conjunction with the post-construction photographs.

D. Post-construction videos are to be submitted with the Contractor's Application for Final Payment.

E. Unless otherwise authorized by the City, the post-construction video recording shall be done with a representative of the City present.

F. The Contractor shall document all post-construction site conditions/elements of the Site as listed for the post-construction Photographs.

G. The video documentation shall provide a clear and continuous view of the project alignment showing all visible utilities and features within the limits of construction.

H. To preclude the possibility of tampering or editing in any manner, all video recordings shall, by electronic means, generate and display continuously and simultaneously on the screen digital information to include the date and time of recording. The time information shall consist of hours, minutes and seconds, separated by colons (i.e., 10:35:18).
I. The audio video recording shall consist of one video and one audio track which shall be recorded simultaneously. All tracks shall consist of original live recordings and thus shall not be copies of other audio and video recordings.
J. The audio track shall contain the narrative commentary. Ample descriptive narrative shall be recorded simultaneously during all recordings. Narration shall include clearly audible comments that will deliver station number and/or street address locations, direction of view and rotation.
K. Typical video segments should not exceed 10 minutes in length.

3.09 DELIVERABLES

A. Refer to Section 01015 – Specific Project Requirements for additional deliverables required for the Project.
B. Delivery of the documentation record shall be made as soon as is practical after the images are recorded. Deliverables include original photographs in JPG format, photographs converted to pdf format, interactive map index and navigation system.
C. Electronic Storage Devices: Submit the navigation system on a non-returnable USB compatible flash drive. Submittals shall conform to the following:
   1. Submit with the monthly invoice two sets of digital photographs and/or videos. Each set shall be contained on a separate electronic storage device.
   2. Each set shall be cumulative of all photographs and/or videos taken to date.
   3. Affidavit(s) of Authenticity shall be included in a digital format.
D. Document Management System: Unless otherwise noted in Section 01015 – Specific Project Requirements, all deliverables shall be provided in an electronic format using the specified document management system and in accordance with paragraph 1.05 of this Section.

END OF SECTION

CITY OF FOUNTAINS
HEART OF THE NATION

KANSAS CITY
MISSOURI

TRANSMITTAL LETTER

Project Number _____

Project Title _____

TO: _____

ATTN: _____

Date _____
Re: _____

We are sending you
❑ Shop Drawings
❑ Copy of Letter

❑ Attached
❑ Prints
❑ Change Order

❑ Under separate cover via _____ the following items:
❑ Drawings ❑ Samples ❑ Specifications
❑ _____

Copies	Date	No.	Description

These are transmitted as checked below:

❑ For Approval
❑ For Your Use
❑ As Requested
❑ For Review and Comment

❑ Approved as Submitted
❑ Approved as Noted
❑ Returned for Corrections
❑ _____

❑ Resubmit _____ Copies for Approval
❑ Submit _____ Copies for Distribution
❑ Return _____ Corrected Prints

Remarks: _____

By: _____

Distribution:
❑ Owner
❑ Contractor
❑ Construction Manager
❑ Design Professional
❑ Consultant
❑ Other

SECTION 01335 –DOCUMENT MANAGEMENT

PART 1 - GENERAL

1.01 SUMMARY

A. An internet-based coordination and document management system (DMS) will be used for the Project. This system will be used to manage project documentation among the City, Contractor and Design Professional. The Contractor shall utilize the document management system for all project related correspondence and documentation.

B. The DMS will be utilized to create, track and organize all project documentation, including, but not limited to, the following:
   1. Schedules.
   2. Applications for Payment.
   3. Meeting minutes with action items.
   4. Project correspondence.
   5. Shop Drawing and Sample(s) Submittals.
   6. Transmittals.
   7. Change Management:
      (a) Requests for Interpretation.
      (b) Requests for Proposal.
      (c) Work Change Directives.
      (d) Change Orders.
   8. Reporting:
      (a) Certified Payroll Report.
      (b) Subcontractors and Major Material Suppliers List.
      (c) Daily Labor Force Reports.
      (d) Daily Inspection Reports.
      (e) Photographs and Video.
      (f) Certificate of Achievement of Full Operation.
      (g) Contractor Affidavit for Final Payment.
      (h) Subcontractor Affidavit for Final Payment.
      (i) Punch Lists.
   9. Notifications:
      (a) Correction of Defective Work.
      (b) Notification of Non-Compliance.

1.02 RELATED SECTIONS

A. Section 00700 – General Conditions.
B. Section 01015 – Specific Project Requirements.
C. Section 01300 – Submittals.

1.03 COORDINATION MEETING

A. Prior to the pre-construction conference, the City will facilitate a meeting with the Contractor to review requirements for project coordination, document control and use of the DMS. The meeting should be scheduled to allow the Contractor time to submit the initial project correspondence and preliminary schedules in accordance with Section 00700-General Conditions.

B. At this meeting, the City will present the procedures to be used for document management for the Project.

PART 2 - PRODUCTS

Not used.

PART 3 - EXECUTION

Not used.

END OF SECTION

SECTION 01500 – TEMPORARY FACILITIES

PART 1 - GENERAL

1.01 SUMMARY

A. This specification covers the requirements for temporary construction facilities required on all projects.

1.02 SPECIFICATION MODIFICATIONS

A. It is understood that throughout this section these Specifications may be modified by appropriate items in Section 01015 – Specific Project Requirements or as otherwise indicated on the Contract Drawings.

1.03 RELATED SECTIONS

A. Section 01000 – General Project Requirements.
B. Section 01015 – Specific Project Requirements.
C. Section 01300 – Submittals.

1.04 CODES AND STANDARDS

A. The publications listed below form a part of this specification to the extent referenced. The publications are referred to within the text by the basic designation only.
B. National Fire Protection Association:
   1. NFPA 10 - Standard for Portable Fire Extinguishers.
   2. NFPA 70 - National Electric Code.
   3. NFPA 241 - Standard for Safeguarding Construction, Alternation and Demolition Operations.

1.05 INFORMATION PROVIDED BY THE CITY

A. As provided in the Contract Documents.

1.06 SUBMITTALS

A. Submit as specified in Section 01300 – Submittals.

1.07 QUALITY ASSURANCE

A. The Contractor is responsible for the quality assurance and quality control of the Work.
B. Regulations – Comply with industry standards and applicable laws and regulations of authorities having jurisdiction, including but not limited to:
   1. Building Code requirements.
   2. Health and safety regulations.
   3. Utility company regulations.
   4. Police, Fire Department and rescue squad rules.
C. Standards:
   1. Comply with NFPA 10 and 241 and ANSI A10 Series standards “Temporary Electrical Facilities.”
   2. Comply with NEMA, NECA and UL standards and regulations for temporary electric service. Install service in compliance with NFPA 70.

D. Inspections – Arrange for authorities having jurisdiction to inspect and test each temporary utility before use. Obtain required certifications and permits.

PART 2 - PRODUCTS

Not used.

PART 3 - EXECUTION

3.01 OFFICE

A. Stationary Office – If required in Section 01015 - Specific Project Requirements, Contractor shall maintain a suitable stationary office at or near the Site during the performance of the Work.

B. Assigned Vehicle – For projects of a certain scale and duration, the City will allow the Contractor to use an assigned vehicle to serve as a mobile office at the site of the Work. See Section 01015 – Specific Project Requirements regarding the use of a vehicle in lieu of a stationary office.

C. The office shall serve as the headquarters of the Contractor's representative authorized to receive Contract Documents, instructions, other communication or articles associated with the Work.

D. Any communication given to the Contractor's representative or delivered to Contractor's office at the site of the Work shall be deemed to have been delivered to Contractor.

E. Copies of the Contract Documents shall be kept at the office and shall be available for use at all times.

3.02 FIELD OFFICE FOR RESIDENT PROJECT REPRESENTATIVE

A. See Section 01015 – Specific Project Requirements regarding the requirement of the Contractor to provide a field office for the Resident Project Representative.

3.03 TEMPORARY UTILITIES

A. Provide temporary utilities required for construction. Materials may be new or used, must be adequate for the required usage, not create unsafe conditions and not violate applicable codes and standards.

B. Power:

1. All power for lighting, operations of the Contractor's plant/equipment or for any other use which may be required for proper completion of the Work shall be provided by the Contractor.
2. Temporary heat and lighting shall be maintained until the Work is accepted.

C. Telephone/internet service:

1. Contractor shall make all necessary arrangements and pay all installation and monthly charges for telephone/internet service for the temporary office at the site and shall provide all required devices for such service.

D. Sanitary Facilities:

1. Contractor shall furnish temporary sanitary facilities at the site, as provided herein, for the needs of all construction workers and others performing work or furnishing services on the Project.
2. Sanitary facilities shall be of reasonable capacity, properly maintained throughout the construction period and obscured from public view to the greatest

practical extent. If toilets of the chemically treated type are used, at least one toilet will be furnished for each 20 persons. Contractor shall enforce the use of such sanitary facilities by all personnel at the site.

3. Ventilate the units to control odors and fumes and empty and clean them at least once a week or more often if required by the City. The doors shall be self-closing. Locate the facility behind the construction fence or out of the public view.

3.04 SECURITY

A. See Section 01000 – General Project Requirements – SECURITY regarding the requirements for security.

3.05 PARKING

A. See Section 01000 – General Project Requirements – PARKING regarding the requirements for parking.

END OF SECTION

SECTION 01566 – CLEANUP OPERATIONS

PART 1 - GENERAL

1.01 SUMMARY

A. The Contractor shall provide all material, labor and equipment necessary for cleanup operations. The Contractor shall maintain a neat and clean job site at all times.

1.02 SPECIFICATION MODIFICATIONS

A. It is understood that throughout this section these Specifications may be modified by appropriate items in Section 01015 – Specific Project Requirements or as otherwise indicated on the Contract Drawings.

1.03 RELATED SECTIONS

A. Section 00700 – General Conditions.
B. Section 01000 – General Project Requirements.
C. Section 01015 – Specific Project Requirements.
D. Section 02510 – PCC Sidewalks, Driveways, Ramps.
E. Section 02930 – Seeding.
F. Section 02931 – Sodding.
G. Section 03000 – Miscellaneous Concrete.

1.04 CODES AND STANDARDS

A. Not used.

1.05 DEFINITIONS

A. Not used.

1.06 INFORMATION PROVIDED BY THE CITY

A. As provided in the Contract Documents.

1.07 SUBMITTALS

A. The Contractor shall submit as specified in Section 01300 – Submittals, if proposing alternate methods and facilities for concrete washout facilities. See paragraph 3.03.E. 3 in this Section.

PART 2 - PRODUCTS (NOT USED)

PART 3 - EXECUTION

3.01 SITE MAINTENANCE

A. Cleanup operations shall be conducted in accordance with Section 00700 General Conditions, Article 6 – Contractor's Responsibilities.
B. Adequate cleanup shall be a condition for the processing of the Contractor's monthly progress payment applications.
C. The Contractor shall, at all times, keep the premises from accumulations of excavated materials, waste materials and other debris resulting from the Work. Site maintenance shall include, but is not limited to, the following:

1. The Contractor shall sweep streets daily to maintain the Site in a neat and clean condition.
2. Provide adequate trash receptacles on the Site and promptly empty when filled.
3. Conduct periodic cleanup of the Site to avoid hazards, interference with traffic or operations at the Site.
4. Keep construction materials such as pipe, forms and scaffolding neatly stacked.
5. Conduct immediate cleanup to protect the Work by removing splattered concrete, asphalt, oil, paint, corrosive liquids and cleaning solutions from all surfaces (linear construction) including walls, floors and metal surfaces (vertical construction) before the surfaces are marred.
6. Volatile wastes shall be properly stored in covered metal containers and removed from the Site daily.
7. Wastes shall not be buried on the site or disposed of into storm drains, sanitary sewers, streams or waterways. All wastes shall be removed from the site and disposed of in a manner complying with all local permits, ordinances and anti-pollution laws.
8. Overloading of trucks is prohibited to prevent spillages on all access and haul routes. The Contractor shall provide periodic inspection of traffic areas to enforce the requirements of this Section.
9. The Contractor shall prevent all excess material from washing into stream beds, storm water facilities, streets, culverts, etc.

D. All excavated material not incorporated into the Work shall be removed and disposed of by the Contractor so that the site will be left in equal or better condition than its original state.

E. Any deficiency in the quantity of material for filling depressions caused by settlement shall be supplied by the Contractor.

F. The Contractor shall remove all mobilized equipment, surplus materials, debris and temporary facilities from the site. The construction site shall be left in its original condition or better condition than before the Work commenced.

G. In addition, as directed by the City, the Contractor may be required to obtain a City approved release form, signed by the property owners affected by the Work.

3.02 DUST CONTROL

A. The Contractor shall take all reasonable measures to prevent unnecessary dust. Earth surfaces subject to dusting shall be kept moist with water or by the approved application of an approved chemical suppressant. When practical, dusty materials in piles or in transit shall be covered to prevent blowing.

B. The Contractor shall make provisions so that buildings or operating facilities that may be adversely affected by dust shall be adequately protected from dust. Existing or new machinery, motors, instrument panels or similar equipment shall be protected by suitable dust screens. Proper ventilation shall be included with dust screens.

C. Contractor shall maintain and keep all streets clean throughout the Work period. The Contractor shall perform street sweeping on a daily basis to remove dust and debris from paved areas within the Work site as well as on all access and haul routes.

3.03 CONCRETE WORK

A. See Section 02510 – PCC Sidewalks, Driveways and Handicap Access Ramps for additional requirements.

B. See Section 03000 – Miscellaneous Concrete for additional requirements.

C. Three (3) working days after all subsurface work has been completed, the contractor shall initiate the following restoration work: seed and/or sod (depending on contract requirements and/or written agreements with property owners), replacing concrete sidewalks, curbs, gutters, driveways and other surfaces impacted by the Work.

D. Three (3) working days after the placement of concrete, the Contractor shall conduct cleanup operations related to the completed concrete work as follows:
   1. Removal of forms, backfilling of the form excavation and debris removal from streets, sidewalks and parkway areas shall be accomplished within three (3) working days after the concrete placement. The backfilled areas within one foot of new concrete shall not be compacted until the concrete has cured a minimum of five (5) days.
   2. Five (5) working days after the concrete is placed, the Contractor shall complete all joint caulking, pavement restoration, seeding and sodding. If construction is being performed during periods other than designated seeding and sodding seasons, all locations without turf cover shall be completed within ten (10) working days after the beginning of the next seeding and sodding season. Refer to Section 02930 – Seeding and Section 02931 - Sodding for additional requirements.
   3. If cleanup, backfilling, sodding, joint caulking or pavement restoration is not accomplished within the above limits, all tear-out and installation operations shall cease until these items are finished. Proceeding without these items being completed is at the sole discretion of the City.
   4. All excavated material shall be removed and disposed of by the Contractor so that the grounds will be left in equal or better condition than its original state. Any deficiency in the quantity of material for filling depressions caused by settlement shall be supplied by the Contractor.
   5. Surplus materials, equipment, tools, temporary facilities and structures shall be removed by the Contractor; all debris shall be hauled away by the Contractor and the construction site shall be left in equal or better condition than its original state. Payment of completed items on the Schedule of Values shall be subject to the completion of the cleanup operations.
   6. Tear-out and installation shall not begin if unfavorable conditions for concrete placement are forecast for the next day.
   7. All cleanup operations, as stated above, shall be completed five (5) working days after concrete placement.

E. Concrete Washout Facilities:
   1. The Contractor shall provide facilities for concrete washout to collect and retain all the concrete washout water and solids in leak proof containers.
   2. Lined wash pits or washout boxes are acceptable.
   3. Alternate methods for washout facilities may be considered by the City. The Contractor shall submit for review and approval, per Section 01300 – Submittals, the alternate methods and facilities to be used.
   4. The location of washout facilities shall be indicated on the Construction Site Plan (See Section 01000 – General Project Requirements, paragraph CONSTRUCTION SITE PLAN).
   5. Concrete washout facilities shall be inspected daily and after heavy rains to check for leaks, identify any plastic linings or sidewalls that have been damaged by construction activities and determine whether they have been filled to over 75 percent capacity.

6. When the washout container is filled to over 75 percent of its capacity, the wash-water shall be vacuumed out or allowed to evaporate to avoid overflows. When the remaining cementitious solids have hardened, they shall be removed from the Site.
7. Damages to the washout container shall be repaired promptly.
8. Before heavy rains, the washout container's liquid level shall be lowered or the container shall be covered to avoid an overflow during the rain storm.
9. Washout facilities shall be removed from the Site upon completion of the Work and the area restored as specified herein.

END OF SECTION

SECTION 01570 - TEMPORARY EROSION AND SEDIMENT CONTROL

PART 1 – GENERAL

1.01 SUMMARY

A. The Contractor shall provide erosion and sediment control measures for all areas within and adjacent to the Project site. The Contractor shall assume that the work is to be done under the City's General Operating Permit (Permit No: MOR100006). The Contractor does not need to make separate application to the Missouri Department of Natural Resources (MDNR).

B. Specific erosion and sediment control measures are specified in APWA 5100 and Standard Erosion and Sediment Control (ESC) Drawings. These measures shall be implemented in order to control erosion and water pollution.

C. No separate payment shall be made for Erosion and Sediment Control. The Contractor shall include in the lump sum total bid price: all labor, material and equipment necessary to comply with this Section and all other Work indicated in the Contract Documents.

1.02 DESCRIPTION

A. The Contractor shall install and maintain temporary erosion and sediment control devices prior to commencing construction operations and continue through the construction period until such time as seeding and sodding has been completed and turf is established on all graded areas.

B. The Contractor shall prepare and implement a Stormwater Pollution Prevention Plan (SWPPP) utilizing the latest version of the City's SWPPP template to develop the plan. The plan must include a narrative of the types and appropriate uses of Best Management Practices (BMPs) for erosion and sediment control and stormwater management. The requirements of the SWPPP must be as stringent as those described in the City's General Operating Permit (No: MOR100006) and 10 CSR 20-6.200. Additionally, the SWPPP must comply with the City of Kansas City's MS4 permit.

C. Failure to control erosion and water pollution will result in the Contractor being noncompliant. Any noncompliance constitutes grounds for the following enforcement actions. The Contractor shall have 24 hours after receiving a notice of noncompliance from the City's representative (i.e. Project Manager, Design Professional, Inspector/ Representative of the City) to correct the problem. If weather conditions prevent the correction of BMPs within 7 calendar days, the reasons for the delay must be documented (including pictures) and there must be a narrative explaining why the work cannot be accomplished within the 7 day time period. The documentation must be filed with the regular inspection reports. The Contractor shall correct the problem as soon as weather conditions allow. If the Contractor fails to correct the problem after the time prescribed, the City will hire a remediation expert to fix the problem. In such an event, the Contractor shall be liable to the City for the remediation costs plus a 10 percent mark-up of the total contract price. If the Contractor continues to be noncompliant, the Director (or an authorized agent thereof) may issue a stop work order and delay any payment until control measures are properly functioning and any damage has been mitigated. In such an event, any delay to the Project schedule will result in liquidated damages assessed against the Contractor.

1.03 SPECIFICATION MODIFICATIONS

A. It is understood that throughout this section, these Specifications may be modified by appropriate items in Section 01015 – Specific Project Requirements or as otherwise indicated on the Contract Drawings.

1.04 RELATED SECTIONS

A. Section 01000 – General Project Requirements.
B. Section 01015 – Specific Project Requirements.
C. Section 01300 – Submittals.
D. Section 02200 – Earthwork.
E. Section 02575 – Surface Restoration.
F. Section 02930 – Seeding.
G. Section 02931 – Sodding.
H. KCMO - APWA 5100 – Erosion and Sediment Control
I. KCMO - APWA Standard Erosion and Sediment Control (ESC) Drawings (www.kcmeyto.apwa.org)

1.05 QUALITY ASSURANCE

A. The Contractor is responsible for the quality assurance and quality control of the Work. The Work shall be performed by a contractor with a proven record of performance for similar erosion and sedimentation control work.

1.06 INFORMATION PROVIDED BY THE CITY

A. As provided in the Contract Documents.

1.07 CONTRACTOR SUBMITTALS

A. The Contractor shall submit to the City/Design Professional for review and approval, in accordance with Section 01300 – Submittals, all specifications and data covering the proposed materials to be used for erosion and sedimentation control work.
B. The Contractor shall submit the following to the City/Design Professional for review and approval prior to the preconstruction conference:
   1. The Contractor shall prepare a Stormwater Pollution Prevention Plan (SWPPP) for Projects that disturb one or more acres of land or disturb less than one acre when part of a larger Project which will disturb one or more acres over the life of the Project.
   2. The SWPPP shall meet the requirements of this Section, applicable references on the plans, the City's adopted Erosion and Sediment Control Specifications (ESCS), and all sections of the APWA-KCMO specifications that reference erosion control requirements. The Contractor shall develop, implement, and adhere to the erosion control and stormwater pollution prevention plan based upon the City's guidelines and requirements.
   3. No work can begin until the SWPPP is approved by the City/Design Professional.
   4. The Contractor shall update and maintain the SWPPP as necessary to develop ongoing site-specific control measures until final acceptance of the Project.

PART 2 – PRODUCTS

B. Unless otherwise specified in Section 01015 – Specific Project Requirements, acceptable products for Inlet Protection include the following:
   1. Gutter Buddy, Dandy Curb® or approved equal.

PART 3 – EXECUTION

3.01 SAFETY

A. Perform all work in accordance with applicable Occupational Safety and Health Administration (OSHA) standards.

3.02 PERFORMANCE

A. City Projects are covered by a general National Pollutant Discharge Elimination System (NPDES) permit maintained by the Water Services Department's Storm Water Division. The Permit imposes a number of obligations including, but not limited to, the following:

1. New Projects must be reported to the MDNR 90 days before the Project starts.
2. Each site must have and follow a written Storm Water Pollution Prevention Plan (SWPPP). Each site must be inspected weekly and following each rain event, for compliance with the SWPPP. Written inspection reports must be kept.
3. All personnel on site must be briefed on the requirements of the SWPPP.
4. A copy of the SWPPP must be on site at all times.
5. All deficient items shall be promptly corrected. In no case shall the correction period exceed two calendar days.
6. Quarterly reports must be filed by the City with MDNR identifying and giving the status and percent complete of each Project.
7. MDNR must be notified if hazardous substances or contaminated soil are discovered on site.

B. The Contractor shall follow the approved SWPPP, as well as all erosion control measures included in the Contract Documents and implement other BMP measures as directed by the City/Design Professional.

C. The Contractor shall prevent erosion during his operations until vegetation is re-established. The Contractor shall prepare erosion control plans and submit in writing to the City/Design Professional any proposed modifications to the plans. The proposed modifications shall describe materials that will be used and the tasks that will be performed to control runoff on the site.

D. Erosion control devices shall be in place before land is disturbed.

E. All earthen structures shall be seeded or sodded. See Section 02930 – Seeding or Section 02931 – Sodding for additional requirements.

F. Vegetation shall be established to provide adequate protection or develop other suitable means.

G. Sediment trapping devices shall been installed in the proper location prior to grading.

H. The Contractor shall establish perimeter sediment trapping measures that function properly.

I. The Contractor shall prevent sediment from leaving the site and/or from damaging adjacent property.

J. The Contractor shall prevent and or remove mud on public roads or at intersections with public roads that is related to the work being completed.

K. The Contractor shall provide a temporary construction entrance to reduce/eliminate the transport of mud from the construction site onto public right of ways.

L. The Contractor shall provide dust control measures for any graveled areas or exposed soil areas. See Section 01000 – General Project Requirements, paragraph DUST CONTROL for additional requirements.

M. The Contractor shall temporarily or permanently stabilize all areas with exposed soil. See Section 02930 – Seeding or Section 02931 – Sodding for additional requirements.

N. The Contractor shall adequately stabilize all finished cut and fill slopes.

O. All on-site drainage channels and outlets shall be adequately stabilized.

P. Route stream around work areas.

Q. Repair stream channel damages per the Contract Documents.

R. Provide stabilization or a temporary stream channel crossing where needed.

3.03 INSTALLATION

A. Methods, materials and maintenance shall be the sole responsibility of the Contractor. The Contractor and the City/Design Professional shall conduct weekly onsite inspections using the "Erosion and Sediment Control Checklist" provided by the Water Services Department. Remove any onsite pollutant sources (debris piles with petroleum cans, chemical containers, fueling trucks/tanks or other possible sources of pollution). Upon notification of a weather forecast with a reasonable likelihood of rain, or at the direction of the City/Design Professional, the Contractor shall construct temporary berms and install erosion control fencing as necessary to control the potential eroded sediment and prevent it from leaving the construction area. If the Contractor's construction operations are complete to the point where seeding or sodding is the major item at hand before final acceptance can be made, and seeding or sodding is out-of-season or disallowed by the City/Design Professional, the Contractor shall construct one of the following erosion control measures:

1. Incorporate the use of erosion control fencing immediately downstream of vulnerable areas that are susceptible to the formation of small streams. Maintain the erosion control devices until seeding or sodding season returns. Upon return of the sodding season, the area shall be re-graded to the lines and grades established in the Contract Drawings and sodded at the direction of the City/Design Professional. See Section 02930 – Seeding and Section 02931 – Sodding for additional requirements.

2 Terrace the ground with graded berms and incorporate the use of both temporary slope drains (See ESC Section 10.03.4.3 and Section 02200 – Earthwork for additional requirements) and erosion control fencing (as specified in this Section). Maintain the erosion control devices until seeding or sodding season returns. Upon return of the seeding or sodding season, the area shall be re-graded to the lines and grades established in the Contract Drawings and seeded/sodded at the direction of the City/Design Professional. See Section 02930 – Seeding and Section 02931 – Sodding for additional requirements.

3. Fertilize, place seed or sod, and irrigate as directed by APWA-KCMO 2400. Maintain the erosion control devices until seeding or sodding season returns. Upon return of the seeding or sodding season the Contractor shall re-establish the grade and replace all dead seed or sod at the direction of the City/Design Professional. See Section 02930 – Seeding and Section 02931 – Sodding for additional requirements.

B. Silt fence shall be installed, inspected and maintained in accordance with APWA ESC–03.

C. Berms shall be constructed in accordance to APWA ESC–05:

1. Berms are required if the silt fence is not installed or properly maintained.
2. Inspection shall be frequent and repair or replacement shall be made promptly as needed.

3. Remove sediment deposits as necessary to provide adequate storage volume for the next rain.
4. The Contractor shall remove berms when they have served their usefulness.
5. Sediment trapped by this practice shall be uniformly distributed on the source area prior to seeding or sodding.

D. The Rock Check Dam shall be constructed, inspected and maintained in accordance to APWA ESC–10.

E. Inlet Protection. Work covered under this item consists of installing a Gutter Buddy, Dandy Curb® or equal inlet protection system for inlets and median barrier inlets without grates. The purpose is to keep silt, sediment and construction debris out of the storm system:

1. The inlet protection system shall be a sewn fabric unit enclosing a porous structure in the form of a cylindrical tube placed in front of and extending beyond the inlet opening on both sides.
2. Place inlet protection unit on the street with aggregate pouch near the inlet it will be installed to protect.
3. For oil and sediment, place absorbent in the sock tube.
4. Center the unit against curb or median inlet opening so that the curb side of the unit creates a seal with the curb or median barrier and inlet structure. There will be approximately twelve (12) inches of the inlet protection unit overhanging on each side of the opening. If the unit is not installed in this manner, it will not function properly.
5. The Contractor shall remove all accumulated sediment and debris from in front of the unit and from the street surface in the vicinity of every installed unit after each rain event or as directed by the City/Design Professional. Dispose of the unit at an appropriate recycling or solid waste facility when the unit is no longer being used.
6. Oil and sediment. Remove and replace absorbent when near saturation.

3.04 MAINTENANCE AND REPAIR

A. The Contractor is responsible for maintaining all erosion and sediment control measures until acceptance of the Project by the City.

B. Erosion control measures showing evidence of overtopping, breaks or erosion shall be repaired or replaced with suitable materials.

C. All storm sewer inlets shall be regularly maintained so that sediment will not enter the system.

D. Repair and clean-out all control measures that are not functioning properly.

E. Remove temporary measures that are no longer needed.

F. Seeded or sodded areas requiring maintenance (fertilizer, re-sodding, re-seeding or additional mulch and watering) shall be promptly addressed. See Section 02930 – Seeding and Section 02931 – Sodding for additional requirements.

3.05 WARRANTY

A. Seeding and sodding work shall have taken root and established satisfactory coverage before acceptance by the City. The Contractor shall maintain as described in paragraph 3.04 above and shall guarantee seeding and sodding for one (1) year after acceptance. The Contractor shall scarify, re-seed or re-sod, fertilize and mulch (seeded areas) any barren area greater than 1 square foot. See Section 02575 – Surface Restoration for requirements on early acceptance.

END OF SECTION

SECTION 01580 – PROJECT SIGNS

PART 1 - GENERAL

1.01 SUMMARY

A. Contractor shall provide all material, labor and equipment necessary for the fabrication, printing and installation of Project signs.

B. This section covers project sign requirements for all Kansas City, Missouri - Water Services Department projects. Project sign requirements include the following:

1. Project identification sign description.
2. Project sign installation.
3. Maintenance and removal of Project sign.
4. Printing of signs.
5. Installation of signs.

1.02 SPECIFICATION MODIFICATIONS

A. It is understood that throughout this section these Specifications may be modified by appropriate items in Section 01015 – Specific Project Requirements or as otherwise indicated on the Drawings.

1.03 RELATED SECTIONS

A. Section 01015 – Specific Project Requirements.

B. Section 01300 – Submittals.

C. Section 01581 – Public Communications.

1.04 INFORMATION PROVIDED BY THE CITY

A. City shall provide the graphic design templates of the Project sign in an electronic format to be used in the printing process.

1.05 SUBMITTALS

A. Submit as specified in Section 01300 – Submittals.

B. Shop Drawings (not used).

C. Product Data (not used).

D. Samples.

E. Other:

1. Project Sign Locations – submit for review and approval a map of the Project area of marked up Drawings showing the location and orientation of each project sign.
2. Submit for review and approval notifications to homeowners and business adjacent to the location of the Project signs.
3. Re-use of Placards – if the Contractor has salvaged placards from previous projects, they may be re-used if in good condition, there are no changes to the information included on the sign and approved by the City. Submit color photographs that accurately show the condition of each placard to be re-used for review and approval.

PART 2 - PRODUCTS

2.01 PRINTERS

A. A list of printing companies that have previous experience with printing signs for the City are included in Section 01015 – Specific Project Requirements.

2.02 FRAME

A. Metal frame and hardware shall be in conformance with Water Services standard detail D-20142 – Installation Detail for Project Signs (see Figure 3).

2.03 PLACARDS

A. Upper Placard Size – 6 feet wide by 4 feet tall.
B. Lower Placard Size – 6 feet wide by 1 foot tall.
C. Material – Coroplast® corrugated plastic sheeting or approved equal.
D. Sheeting Thickness – ½ inch.
E. Sheeting Color – white.
F. Print Method – direct to Coroplast® with outdoor UV laminate coating.

2.04 PLACARD CONTENT

A. Construction Phase Upper Placard – for each Project sign the Contractor shall provide an upper placard which will be displayed through construction. An example of the Construction Phase Upper Placard is shown in Figure 1.
B. Post-Construction Phase Upper Placard – for each Project sign the Contractor shall provide an upper placard which will be displayed post construction. An example of the Construction Phase Upper Placard is shown in Figure 2.
C. Lower Placard – for each Project sign, the Contractor shall provide a lower placard. Examples of the Lower Placard are shown in Figures 1 and 2.
D. The City will provide digital files for all placards and graphic images.

2.05 NUMBER OF SIGNS TO BE PROVIDED

A. The number of project signs to be provided is defined in Section 01015 – Specific Project Requirements. Each Project sign includes the following:
   1. One (1) Construction Phase Upper Placard to be displayed during construction.
   2. One (1) Post-Construction Phase Upper Placard to be displayed after completion of the Work.
   3. One (1) Lower Placard to be displayed during construction and post-construction.
   4. Cost associated with printing of placards.
B. Frame as shown in Water Services standard detail D-20142 – Installation Detail for Project Signs (see Figure 3).

PART 3 - EXECUTION

3.01 INSTALATION AND PLACEMENT OF SIGNS

A. Installation – Project signs shall be fabricated and installed in accordance with Water Services standard detail D-20142 – Installation Detail for Project Signs (see Figure 3).

B. Location – Project signs shall be located within the Site as defined by Section 00700 General Conditions. Project signs shall be erected in a conspicuous place but shall not interfere with the vision of pedestrian or vehicular traffic such as to create a hazard. Signs shall be located in the public right of way or in an easement acquired for the Project. Locations of the signs shall be coordinated with the City prior to installation and submitted accordance with paragraph 1.05 SUBMITTALS.
C. Notifications – the Contractor shall notify any homeowners or businesses adjacent to the location of the signs at least three (3) days prior to erecting signs.
D. Project sign(s) shall be erected not less than two (2) days before the start of construction activities. No construction activities are allowed until the Project signs are erected.
E. Project signs shall remain in place for the duration of the Project and shall be maintained in a true, plumb and neat condition.

3.02 REPLACEMENT OF UPPER PLACARDS

A. Upon completion of the Work and at the direction by the City, the Contactor shall remove the Construction Phase Upper Placard (Figure 1) on all Project signs and replace them with the Post-Construction Upper Placard (Figure 2).
B. The Lower Placards are to remain in place.

3.03 REMOVAL OF PROJECT SIGNS

A. All Project signs shall be maintained for thirty (30) calendar days after completion of the Work or as otherwise directed by the City.
B. Contractor shall remove all Project signs and restore the area disturbed by construction activities.
C. Project signs shall be removed from the Project areas and will become property of the Contractor.
D. The Contractor may dispose of Project signs or salvage and reuse them on future City projects. The City will assess the condition of the signs and determine the appropriateness of reuse.
E. Within three (3) days of the removal of signs, Contractor shall provide the City written notice that all Project signs have been removed from the Site.

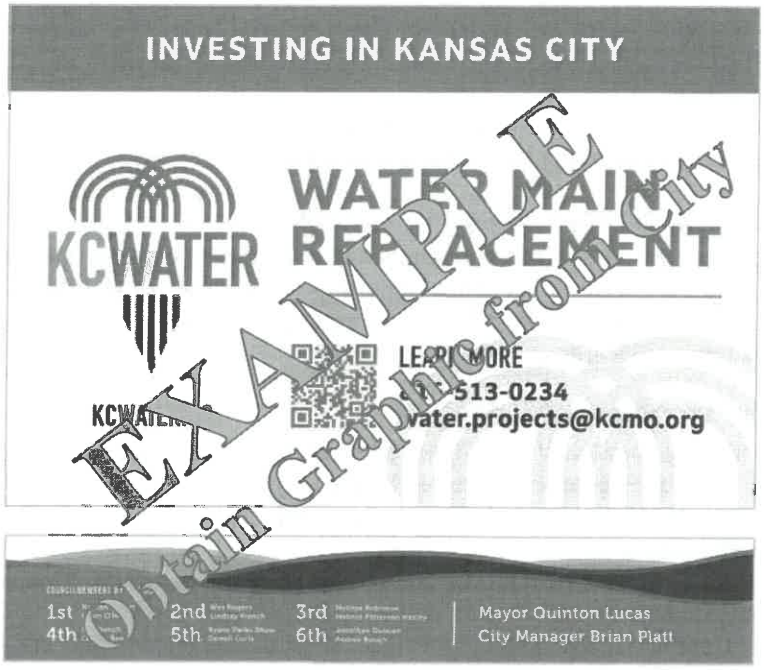

EXAMPLE
Obtain Graphic from City

Figure 1: Construction phase upper and lower placard

Figure 2 – Post Construction Placard

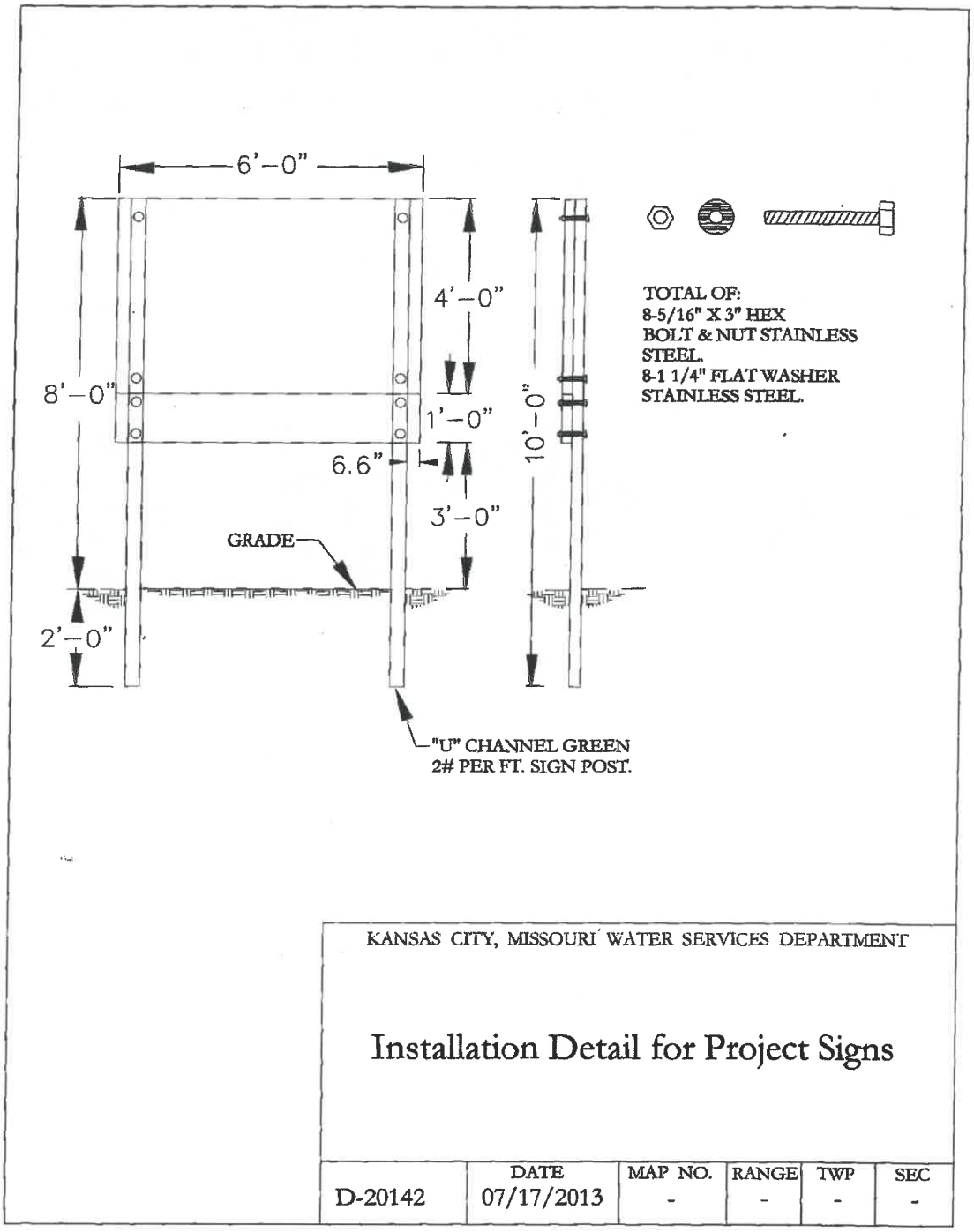

Figure 3 – Installation Detail for Project Signs

END OF SECTION

SECTION 01581 – PUBLIC COMMUNICATIONS

PART 1 - GENERAL

1.01 SUMMARY

A. This section covers communication procedures between the contractor and the public affected by construction activities.

B. Any time the contractor is acting on behalf of the City to perform work, the communications material between the contractor and the public shall adhere to these technical standards and is subject to review and approval by the City.

1.02 RELATED SECTIONS

A. Section 00700 – General Conditions:
   1. Article 6, paragraph 6.14 – Safety and Protection.

B. Section 01015 – Specific Project Requirements.

C. Section 01300 – Submittals.

1.03 DEFINITIONS

A. Affected Properties – homeowners, businesses, tenants or other entities whose everyday activities could be affected by the work.

1.04 INFORMATION PROVIDED BY THE CITY

A. The City will provide the contractor with an electronic file for mailing communications to affected property owners for the purpose of Project communications.

B. The City will provide the contractor with an electronic copy of approved communications templates to be distributed to affected properties.

1.05 SUBMITTALS

A. Submit as specified in Section 01300 – Submittals.

B. Notifications – Submit for review and approval all notification materials developed by the Contractor that are to be distributed to affected properties.

1.06 PUBLIC MEETINGS

A. Description – The contractor shall attend and participate in public meetings held for the project. The contractor's project manager shall attend and present project details. These details include, but are not limited to, the following:
   1. Project schedule.
   2. Project phasing.
   3. Disruptions to the neighborhood.
   4. Work hours.
   5. Temporary restoration efforts.
   6. Final restoration efforts.
   7. Field contact information.

B. The City will provide a location, date and time of the meeting and will facilitate the meeting.

C. See Section 01015 – Specific Project Requirements for additional meeting requirements.

1.07 DOOR HANGERS AND OTHER PRINTED COMMUNICATIONS

A. Description – Door hangers and other printed communications (fact sheets, post cards, signs, etc.) used throughout construction shall be distributed to inform homes and businesses of disruptions.

B. Templates – The City will provide templates for door hangers and other printed communications in an electronic format. See Figures 1 through 5 for an example door hanger.

C. Template Modification – The contractor may need to annotate the printed door hangers with project specific information. This effort may include describing the work and adding applicable date and time information for the benefit of the resident.

D. Review communications material – Review and approval of the communication materials by the City is required prior to the contractor's distribution of materials.

E. Printing and Reproduction – The contractor shall print door hangers, mailers and all other communication materials needed for the project.

F. Distribution List – The list of affected property owners will be provided by the City.

G. Mailing and Distribution – The contractor shall distribute the door hangers and other printed communications to the affected property owners. Door hangers are to be hand-delivered and not placed in the mailbox. All other printed communications will be delivered in a manner acceptable to the City.

H. Costs – All costs to develop, reproduce, deliver or mail notifications shall be included in the contractor's lump sum bid price.

1.08 NOTIFICATION OF UTILITIES

A. Notify utilities in accordance with Section 00700 – General Conditions, Article 6.

1.09 NOTICES TO PROPERTY OWNERS AND AUTHORITIES

A. As provided in Section 00700 - General Conditions, Article 6, the Contractor shall notify adjacent property owners and utilities when execution of the work may affect them.

B. Work Notice:
   1. General notice to affected property owners in advance of the work. Notice is required for any work within an easement. Notice shall be given for work within the City's right-of-way, outside of the street.
   2. Type of notification shall be a door hanger.

C. Denial of Access:
   1. Notice for when it is necessary to temporarily deny access to property, driveway, sidewalk or other facility.
   2. Type of notification shall be a door hanger.

D. Smoke Testing:
   1. Notice for when the Project involves smoke testing.
   2. Type of notification shall be a door hanger.

E. Utility Service Interruption:
   1. Notice for when any utility service connection must be interrupted.
   2. Type of notification shall be a door hanger.

F. Street Closures and Changes to Traffic Patterns:
   1. Notices to utilities and other concerned agencies prior to cutting or closing streets or other traffic areas or excavating near underground utilities or pole lines.
   2. Provide any additional notifications required by the traffic control permit.
   3. Type of notification will be written communication prepared and distributed by the Contractor.

G. Schedule – Notices shall be received by the affected properties no less than two (2) and no more than seven (7) calendar days prior to the work, denial of access, smoke testing, utility service interruption, street closures and changes to traffic patterns or other work that may require notification.

1.10 OTHER COMMUNICATIONS

A. See Section 01015 – Specific Project Requirements for additional communication requirements not specifically included herein or otherwise required by the Contract Documents.

PART 2 - PRODUCTS

Not used.

PART 3 - EXECUTION

Not used.

See example templates on pages 4-9.

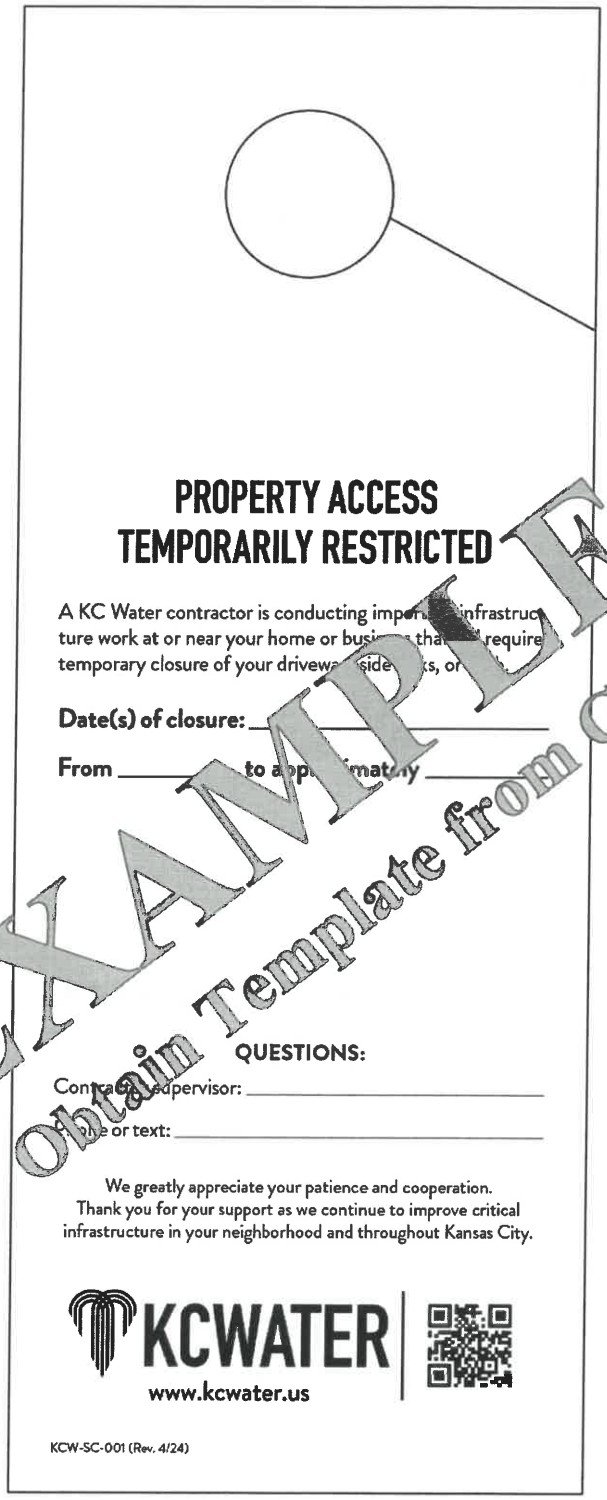

PROPERTY ACCESS
TEMPORARILY RESTRICTED

A KC Water contractor is conducting impo[illegible] infrastructure work at or near your home or busi[illegible] that [illegible] require[illegible] temporary closure of your drivewa[illegible] side[illegible]s, or [illegible]

Date(s) of closure: _____

From _____ **to a**[illegible]**mat**[illegible]**y** _____

QUESTIONS:

Con[illegible]upervisor: _____

[illegible]e or text: _____

We greatly appreciate your patience and cooperation.
Thank you for your support as we continue to improve critical infrastructure in your neighborhood and throughout Kansas City.

KCWATER
www.kcwater.us

KCW-SC-001 (Rev. 4/24)

EXAMPLE
Obtain Template from City

Figure 1 – Restricted Access Door Hanger

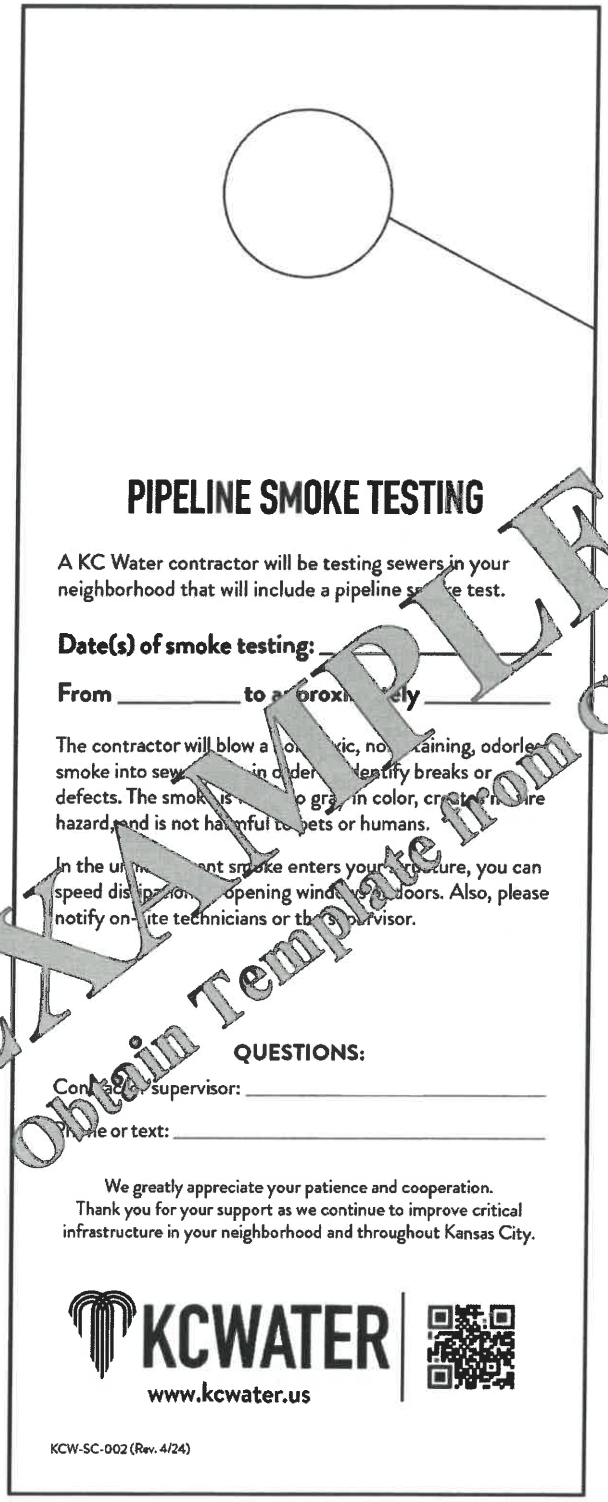

PIPELINE SMOKE TESTING

A KC Water contractor will be testing sewers in your neighborhood that will include a pipeline smoke test.

Date(s) of smoke testing: _____

From _____ **to approximately** _____

The contractor will blow a non-toxic, non-staining, odorless smoke into sewers in order to identify breaks or defects. The smoke is white to gray in color, creates no fire hazard, and is not harmful to pets or humans.

In the unlikely event smoke enters your structure, you can speed dissipation by opening windows and doors. Also, please notify on-site technicians or their supervisor.

QUESTIONS:

Contact the supervisor: _____

Phone or text: _____

We greatly appreciate your patience and cooperation.
Thank you for your support as we continue to improve critical infrastructure in your neighborhood and throughout Kansas City.

KCWATER

www.kcwater.us

KCW-SC-002 (Rev. 4/24)

EXAMPLE
Obtain Template from City

Figure 2 – Smoke Testing Door Hanger

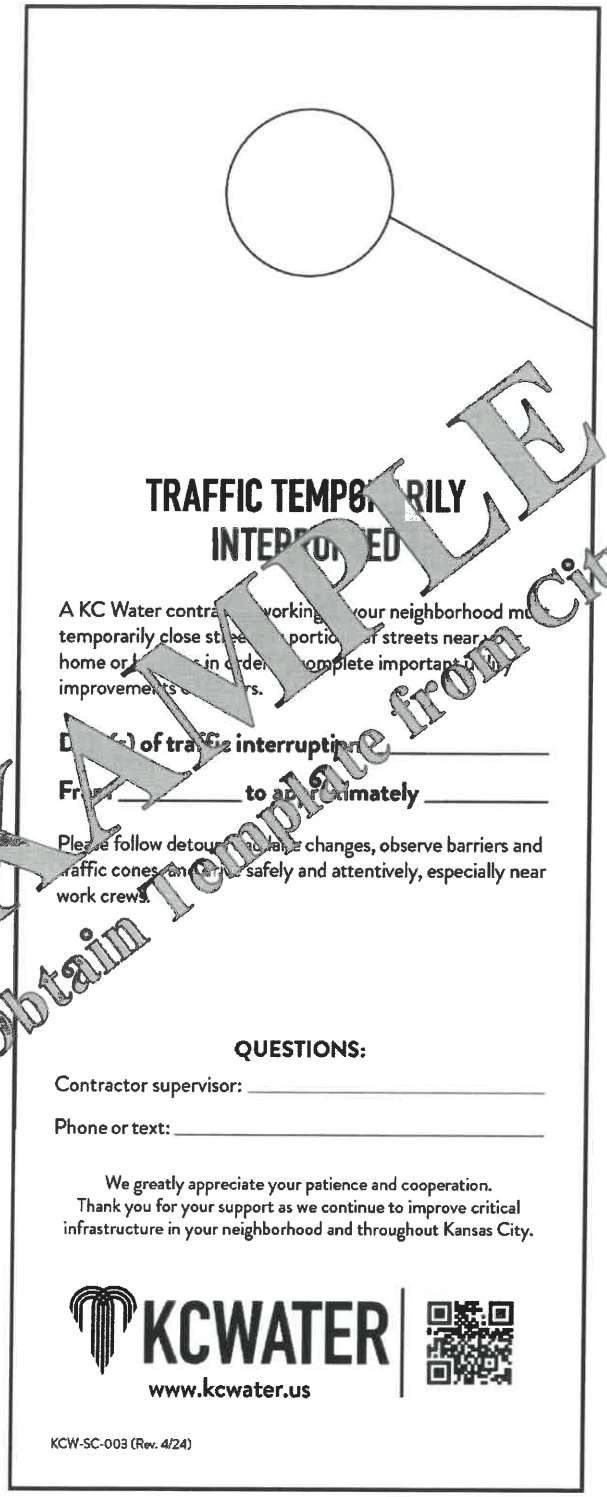

TRAFFIC TEMPORARILY INTERRUPTED

A KC Water contractor working in your neighborhood may temporarily close streets or portions of streets near your home or business in order to complete important water improvements for you.

Dates of traffic interruption: _____

From _____ to approximately _____

Please follow detour and lane changes, observe barriers and traffic cones and drive safely and attentively, especially near work crews.

QUESTIONS:

Contractor supervisor: _____

Phone or text: _____

We greatly appreciate your patience and cooperation.
Thank you for your support as we continue to improve critical infrastructure in your neighborhood and throughout Kansas City.

KCWATER

www.kcwater.us

KCW-SC-003 (Rev. 4/24)

EXAMPLE
Obtain Template from City

Figure 3 -Traffic Interruption Door Hanger

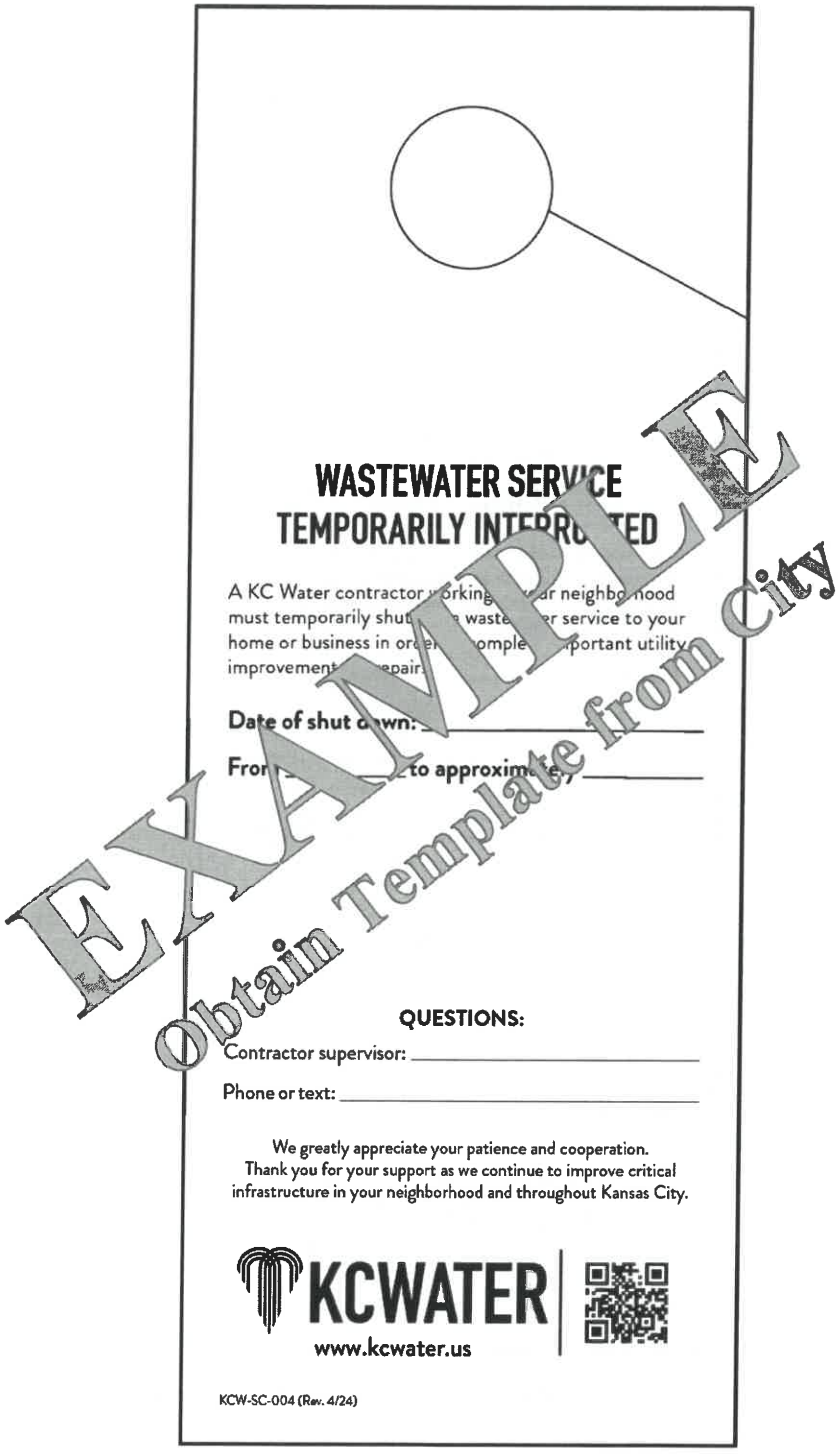

WASTEWATER SERVICE
TEMPORARILY INTERRUPTED

A KC Water contractor working near your neighborhood must temporarily shut off wastewater service to your home or business in order to complete important utility improvement repairs.

Date of shut down: _____

From _____ to approximately _____

QUESTIONS:

Contractor supervisor: _____

Phone or text: _____

We greatly appreciate your patience and cooperation.
Thank you for your support as we continue to improve critical infrastructure in your neighborhood and throughout Kansas City.

KCWATER
www.kcwater.us

KCW-SC-004 (Rev. 4/24)

EXAMPLE
Obtain Template from City

Figure 4 – Wastewater Service Interruption Door Hanger

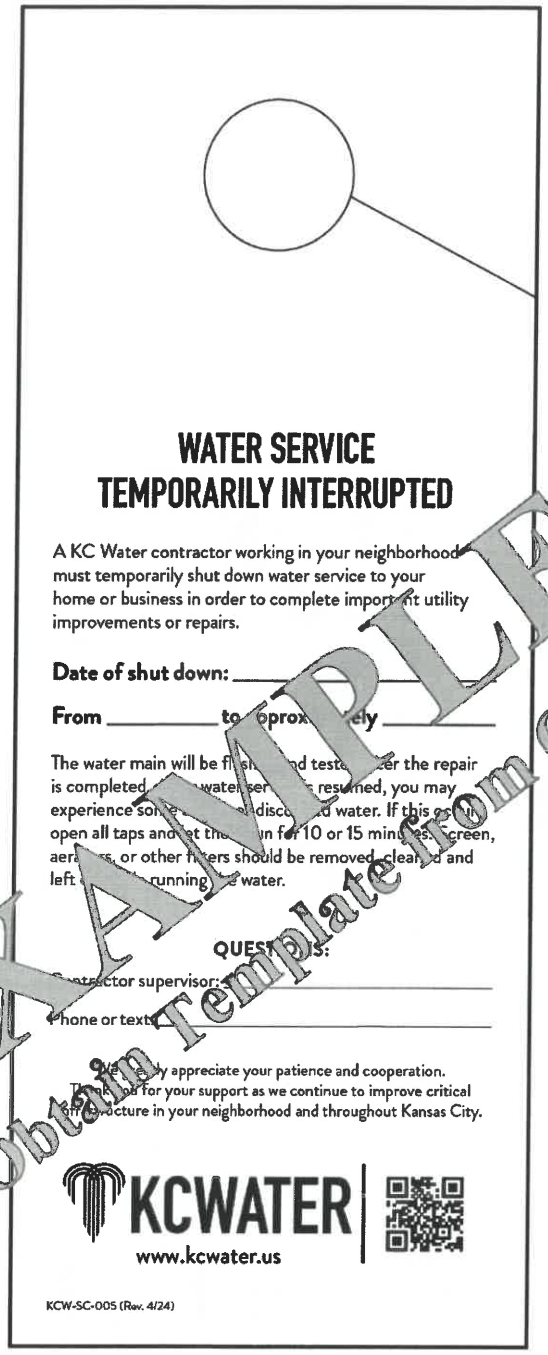

WATER SERVICE
TEMPORARILY INTERRUPTED

A KC Water contractor working in your neighborhood must temporarily shut down water service to your home or business in order to complete important utility improvements or repairs.

Date of shut down: _____

From _____ **to** _____ **approximately** _____

The water main will be flushed and tested after the repair is completed. When water service is resumed, you may experience some cloudy or discolored water. If this occurs, open all taps and let the water run for 10 or 15 minutes. Screen, aerators, or other filters should be removed, cleaned and left out while running the water.

QUESTIONS:

Contractor supervisor: _____

Phone or text: _____

We greatly appreciate your patience and cooperation. Thank you for your support as we continue to improve critical infrastructure in your neighborhood and throughout Kansas City.

KCWATER
www.kcwater.us

KCW-SC-005 (Rev. 4/24)

EXAMPLE
Obtain Template from City

Figure 5 – Water Service Interruption Door Hanger

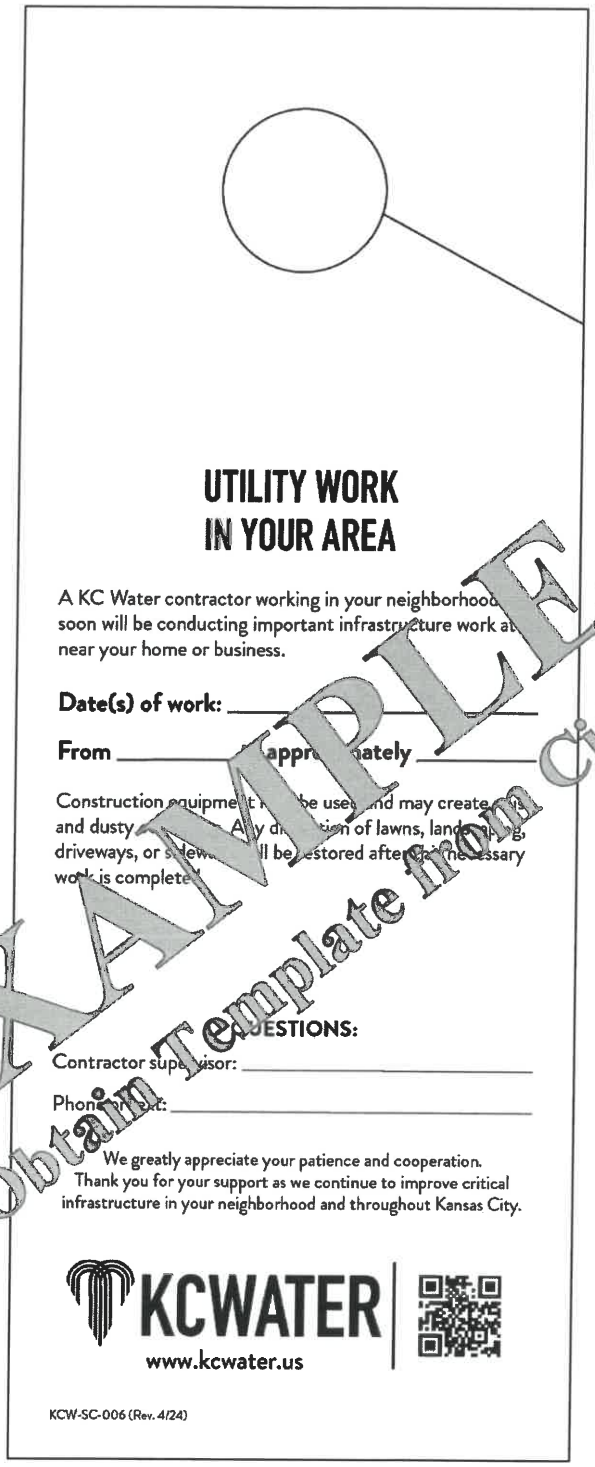

UTILITY WORK IN YOUR AREA

A KC Water contractor working in your neighborhood soon will be conducting important infrastructure work at near your home or business.

Date(s) of work: _____

From _____ **approximately** _____

Construction equipment will be used and may create noise and dusty conditions. Any disruption of lawns, landscaping, driveways, or sidewalks will be restored after the necessary work is completed.

QUESTIONS:

Contractor supervisor: _____

Phone number: _____

We greatly appreciate your patience and cooperation. Thank you for your support as we continue to improve critical infrastructure in your neighborhood and throughout Kansas City.

KCWATER

www.kcwater.us

KCW-SC-006 (Rev. 4/24)

EXAMPLE
Obtain Template from City

Figure 6 – Work Notice Door Hanger

END OF SECTION

CITY OF FOUNTAINS
HEART OF THE NATION

KANSAS CITY
MISSOURI

SUBSTITUTION REQUEST

Project Number _____

Project Title _____

To: _____ Authorization Number: _____
_____ From: _____
Re: _____ Date: _____
_____ Contract For: _____

Specification Title: _____
Section: _____ Page: _____ Article/Paragraph: _____

Proposed Substitution: _____
Manufacturer: _____ Address: _____ Phone No. _____
Trade Name: _____ Model No. _____
Installer: _____ Address: _____ Phone No. _____
History: ❑ New Product ❑ 2-5 years old ❑ 5-10 years old ❑ More than 10 years old
Differences between proposed substitution and specified product: _____
_____
_____

❑ Point-by-point comparative data attached – REQUIRED

Undersigned certifies:

- Proposed substitution has been fully investigated and determined to be equal or superior in all respects to specified product.
- Same warranty will be furnished for proposed substitution as for specified product.
- Same maintenance, service, and availability of replacement parts, as applicable, are available.
- Proposed substitution will not affect or delay Progress Schedule, except as stated below.
- Cost data as stated above is complete. Claims for additional costs related to accepted substitution which may subsequently become apparent are to be waived.
- Proposed substitution does not affect dimensions and functional clearances, except as stated below.
- Payment will be made for changes to building design, including architectural or engineering design, detailing, licenses, royalties, and construction costs caused by the requested substitution.
- Coordination, installation, and changes in the Work as necessary for accepted substitution will be completed in all respects.

Reason for not providing specified item: _____
_____
_____
_____

Similar Installation:
Project: _____ Design Professional: _____
Address: _____ Owner: _____
_____ Date Installed: _____
Proposed substitution affects other parts of Work: ❑ No ❑ Yes; explain _____
_____
_____
Savings to Owner for accepting substitution: _____
Proposed substitution changes Contract Time: ❑ No ❑ Yes; add/deduct _____ days.

Supporting Data Attached:
❑ Product Data ❑ Drawings ❑ Tests ❑ Reports ❑ Samples ❑ _____
Attachments: _____

Submitted by: _____
Signature: _____
Firm: _____
Address: _____

Telephone: _____ Fax: _____ E-Mail: _____

Additional Comments: ❑ Contractor ❑ Subcontractor ❑ Supplier ❑ Manufacturer ❑ DP ❑ _____

DESIGN PROFESSIONAL'S REVIEW AND ACTION

- ❑ Substitution approved – Make submittals in accordance with Specification Section 01300.
- ❑ Substitution approved as noted – Make submittals in accordance with Specification Section 01300.
- ❑ Substitution rejected – Use specified materials.
- ❑ Substitution Request received too late – Use specified materials.

Signed by: _____ Date: _____

Distribution:
- ❑ Owner
- ❑ Design Professional
- ❑ Contractor
- ❑ Consultant
- ❑ Construction Manager
- ❑ Other

SECTION 01700 – TRAFFIC CONTROL

PART 1 - GENERAL

1.01 SUMMARY

A. The Contractor shall provide all materials, labor and equipment (including permits, barricades, cones, drums, construction warning signs, flagmen incidental devices) to protect, warn and guide: vehicular traffic, pedestrian traffic and to protect his personnel and equipment on the site. This specification applies to work being done in conjunction with capital projects and not emergencies or other maintenance related activities.

1.02 SPECIFICATION MODIFICATIONS

A. It is understood that throughout this section these specifications may be modified by appropriate items in Section 01015 – Specific Project Requirements, or as otherwise indicated on the Contract Drawings.

1.03 RELATED SECTIONS

A. Section 01000 – General Project Requirements.
B. Section 01015 – Specific Project Requirements.
C. Section 01300 – Submittals.
D. Section 01581 – Public Communications.

1.04 CODES AND STANDARDS

A. The publications listed below form a part of this specification to the extent referenced. The publications referred to within the specification are by the basic designation only.
B. American Traffic Safety Services Association (ATSSA).
C. "City of Kansas City, Missouri Public Works Department Construction and Material Specifications" (http://kcmo.gov/) (KCMO PW 2305 - Traffic Control – Pedestrian Traffic Control and Sidewalk Closure.)
D. Manual on Uniform Traffic Control Devices (MUTCD).
E. MODOT traffic control and regulations and permits.

1.05 DEFINITIONS

A. City Block – A segment of a street or roadway between two intersections.
B. Working Hours – The Contractor must conduct construction operations in compliance with the City of Kansas City, Missouri Code of Ordinances, Chapter 46 – NOISE CONTROL which generally defines normal working hours as 7:00 am to 6:00 pm on weekdays. Working hours also include any time period approved in writing by the City (see Section 01000 – General Project Requirements, paragraph TEMPORARY ENVIRONMENTAL PROTECTION).
C. Non-Working Hours – Any period of time not defined as Working Hours.
D. Public Works Department – The City of Kansas City, Missouri - Public Works Department.
E. Traffic Control Supervisor – The qualified employee of the Contractor designated to have overall responsibility of the implementation of the Traffic Control Plan, conformance to the Traffic Control Permit and maintenance of traffic control devices.

F. Work Zone – An area of active construction activity along a single street that causes temporary disruption to pedestrian traffic, vehicular traffic, access to properties, or on-street parking.
G. Extended Work Zone – Any work that encompasses more than one city block or street.

1.06 SUBMITTALS

A. Submit as specified in Section 01300 – Submittals.
B. Shop Drawings:
   1. Not applicable.
C. Product Data:
   1. Not applicable.
D. Samples:
   1. Not applicable.
E. Other Submittals:
   1. Traffic Control Plan(s):
      (a) Submit plan(s) directly to the Public Works Department for review and approval as required for permitting. Approval of the traffic control plan is required prior to submitting permit applications.
      (b) Submit the final, approved plan(s) in accordance with Section 01300 – Submittals for informational purposes only.
      (c) Submit changes or revisions to the plans(s) as required by the City's Traffic Control Permit.
      (d) Submit changes or revisions to the Traffic Control Plan necessary for construction phasing.
   2. Traffic Control Permit – submit a copy of the traffic control permit upon approval from the Public Works Department.
   3. Traffic Control Supervisor:
      (a) Submit name, qualifications and contact information in accordance with Section 01300 – Submittals.
      (b) Submit name, qualifications and contact information directly to the Public Works Department.
   4. Public Works Department standard specifications.
   5. Public Works Department standard details.
   6. Maintenance records of traffic control devices.

1.07 GENERAL

A. When the requirements of this section conflict with the requirements of the approved Traffic Control Permit, then the requirements of the Traffic Control Permit shall govern. In all instances, the Contractor shall comply with all KCMO ordinances.
B. The Contractor shall maintain access for pedestrians, vehicles and all properties served by the streets and sidewalks within the site.
C. All work shall be coordinated through the City of Kansas City, Missouri - Public Works Department.
D. Coordination of the traffic control permit shall be conducted during normal business hours (8:00 am through 5:00 pm).

1.08 SPECIFIC PROJECT REQUIREMENTS

A. Specific traffic control requirements are provided in Section 01015 - Specific Project Requirements.

1.09 RESPONSIBILITY

A. The Contractor shall designate a Traffic Control Supervisor having the responsibilities defined in paragraph DEFINTIONS.

B. The Traffic Control Supervisor's name, contact information and qualifications shall be submitted to the City prior to the preconstruction conference.

C. The Traffic Control Supervisor's name and contact information shall be submitted to the Public Works Department as required by the Traffic Control Permit. The contact information provided shall allow the City (Public Works Department) to contact the Traffic Control Supervisor during both working and non-working hours. This information shall be submitted with the application for the Traffic Control Permit and in accordance with paragraph SUBMITTALS.

1.10 SUBMITTAL OF STANDARD DETAILS AND SPECIFICATIONS

A. The Contractor shall obtain a copy of all Public Works Department's standard specifications and details to be used as part of the project. Copies shall be submitted in accordance with paragraph SUBMITTALS.

1.11 ACCESS REQUIREMENTS

A. Unless otherwise stated in Section 01015 – Specific Project Requirements, the Contractor shall maintain access for pedestrians and vehicles to all properties served by streets and sidewalks affected by the Work.

B. Special Restrictions for Extended Work Zones:

1. A maximum of two (2) consecutive city blocks shall be under construction at any one time.
2. Where construction activities cause disruption (i.e. sidewalk closures and/or temporary restriction of on-street parking) to two (2) consecutive city blocks, the following restrictions shall apply:
   (a) At a minimum, pedestrian access shall be maintained on one side of the street only if work can be completed in less than 15 days. Sidewalk closures shall be limited and temporary facilities shall be provided as necessary to allow pedestrian access to all occupied properties affected by construction activities.
   (b) If more than one (1) city block is affected by construction, then construction activities shall be conducted so that on-street parking is maintained on at least one side of the street, on one of the city blocks affected. That is, if on-street parking is eliminated within a city block, the adjacent city block (along the same street) must provide at least on-street parking on one side.
   (c) If a sidewalk will need to be closed more than 15 days, advance approval of the Bike Pedestrian Advisory Committee is required. If a sidewalk closure is planned for more than 15 days in the Greater Downtown Area Plan region, advance approval is required from the Parking and Transportation Commission.

C. Access to adjacent properties served by the street(s) within the project shall be maintained at all times.

D. Traffic shall move through the construction site in accordance with the Traffic Control Permit.

E. When required, flaggers shall coordinate the movement of traffic through the construction site.

F. Temporary Restoration of Access during Non-Working Hours:
   1. All roadways shall be re-opened to traffic in accordance with the Traffic Control Permit or to normal operating conditions (whichever applies) at the end of each work day.
   2. No construction related equipment or material shall be on the roadway outside of normal working hours unless approved by the City (see Section 01000 – General Project Requirements, paragraph CONSTRUCTION SITE PLAN).

1.12 TRAFFIC CONTROL PLAN(S)

A. Unless otherwise indicated on the Drawings or in Section 01015 – Specific Project Conditions, the Contractor shall be responsible for the development and implementation of the Traffic Control Plan necessary to obtain a Traffic Control Permit(s).

B. All costs associated with development, revision or finalization of Traffic Control Plan(s) shall be included in the Contractor's Bid.

C. General Traffic Control requirements shall include but are not limited to the following:
   1. MUTCD requirements shall be maintained on all traffic control plan submittals.
   2. Plans shall clearly identify all traffic control devices to be placed including the location, spacing and other pertinent data required for the traffic control plan reviews.
   3. Plan reviews and resubmittal reviews should be scheduled to be completed with at least two (2) weeks for City staff review on standard traffic control plan submittals. This time may be extended if the plan is complex or of a large volume.
   4. All street typologies listed on the Major Street Plan (https://www.kcmo.gov/city-hall/departments/city-planning-development/other-city-plans) will be required to maintain a minimum of one twelve foot (12') lane in each direction for traffic at all times.
   5. Limited closures on street typologies listed on the Major Street Plan may be allowed but will likely be limited to weeknights and/or weekend work depending on the location of the proposed closure. Full closures may not be possible in some areas of the City.
   6. Electronic Message Boards will be required as part of the communication plan for all lane closures or restrictions on street typologies listed on the Major Street Plan. These signs will need to be in place at least one (1) week prior to the lane closure or restriction and will need to be maintained throughout the closure duration.
   7. Closures in and adjacent to the Streetcar Corridor will be required to have a Track Access Permit.
   8. Residential street traffic control plans will be developed in a way to allow safe travel and maintain access to all properties adjacent to and in the area of the traffic control area.
   9. The Contractor is required to maintain the road surface condition on the haul route to the condition that existed at the time of permit issuance. All damage to the pavement on the haul route caused by the contractor shall be repaired by the contractor at no additional cost to the City.

1.13 TRAFFIC CONTROL PERMIT(S)

A. The Contractor shall not submit Traffic Control Permit applications until the traffic control plan has been approved by the Public Works Department.
B. The Contractor shall obtain a Traffic Control Permit before any construction activity occurs on any City street. Permits shall be obtained and submitted in accordance with Section 01300 – Submittals shall be made no less than two (2) weeks in advance of the construction activity.
C. Specific requirements and the application for Traffic Control Permit can be downloaded from the City's web site at http://kcmo.gov/.
D. The associated permit fees, which may be time and street-type-dependent, are to be obtained from the Public Works Department.
E. All residential, arterial and collector streets require a separate permit and are subject to peak hour restrictions.
F. All costs associated with the Traffic Control Permit(s) shall be included in the Contractor's Bid.

1.14 NOTIFICATIONS

A. Advance notification of affected property owners shall be done in accordance with Section 01581 – Public Communications.
B. Electronic Message Boards are required at least one (1) week in advance of any arterial street closure(s).

PART 2 - PRODUCTS

2.01 TRAFFIC CONTROL DEVICES

A. All traffic control devices shall conform to Part 6 of the "Manual on Uniform Traffic Control Devices" (MUTCD).
B. No substitutions for the devices required by MUTCD or changes in the methods of traffic control as outlined herein will be allowed without written approval of the Director of Public Works or their designee.

PART 3 - EXECUTION

3.01 SAFETY PRECAUTIONS

A. Contractor shall take any and all precautions to guard against injury to persons or damage to property until final acceptance of the work by the City or their representative.
B. Precautions shall include, but not limited to, protection of vehicular and pedestrian traffic from injury or damage due to open excavations, operation of construction equipment, materials storage, etc. by the proper placement of appropriate safety devices.
C. The Contractor shall maintain the safety devices and maintain their proper placement throughout the required period.
D. Construction practices shall be followed that will eliminate all safety hazards.
E. The roadway shall be kept clean and free of construction related debris at all time.

3.02 DEVICE INSTALLATION AND MAINTENANCE

A. Traffic control devices shall be installed and maintained in accordance with KCMO Specification 2305 with the exception that the paragraphs for Method of Measurement and Basis for Payment do not apply.
B. The Contractor shall maintain records of any maintenance required and the date on which it was completed. These records shall be maintained for the duration of the project and submitted in accordance with paragraph SUBMITTALS on a monthly basis.
C. The contractor's designated Traffic Control Supervisor shall make regular workday inspections of the traffic control devices installed as part of Work.
D. It shall be the Contractor's responsibility to maintain all traffic control devices in proper working condition and placement at all times.
E. The Contractor shall immediately correct any deficiencies in traffic control.
F. Any traffic control device not in use shall be covered, removed, or turned away from the view of oncoming traffic.

3.03 CHANGES TO THE TRAFFIC CONTROL PLAN

A. Whenever the work area changes, all construction warning signs and traffic channelization devices shall be made current.
B. The Public Works Department reserves the right to adjust or revise the traffic handling requirements as necessary after construction on the project has started. These changes will be determined based on periodic inspections throughout the duration of the project by both the Water Services and Public Works inspection staff.
C. Notice of such change will be transmitted to the Contractor and it shall be the Contractor's responsibility to make the necessary changes as soon as practicable, but no more than one (1) calendar day, after receipt of the notification. Immediate changes to the traffic control shall be required in situations that are deemed as a public safety matter by the City representatives.
D. If the Contractor encounters conditions that would require a change in method of traffic control, the Contractor shall immediately notify the City's representative. At least 48 hours before the start of the proposed change, the City's representative will request approval of the change in method of maintaining traffic from the Public Works Department. The Contractor shall not proceed with the change without the approval of the Public Works Department.

3.04 PEDESTRIAN TRAFFIC CONTROL

A. Pedestrian traffic control shall conform to KCMO Specification 2305, paragraph-Pedestrian Traffic Control.

3.05 VEHICLE PARKING

A. Parking of construction vehicles, equipment, vehicles of contractor's personnel shall not interfere with public traffic, parking, access by emergency vehicles, or City operations.

3.06 HAUL ROUTES

A. The Contractor shall consult with the City (Water Services Department and Public Works Department) to establish public thoroughfares to be used for haul routes and site access.
B. Residential streets shall not be used as part of the proposed haul routes.

3.07 EMERGENCY CONDITIONS

A. Damage to existing utilities during construction of the Project which requires immediate repair may be considered as an emergency and as such may not be subject to all the restrictions contained herein. These shall be reported to Water Services and Public Works immediately. All subsequent emergency traffic control measures or adjustments shall be coordinated with the City representatives.

B. The Contractor shall immediately contact the utility company whose facilities are involved that may require immediate repair.

C. Such repair work, once declared an emergency by the utility company, shall be pursued on a continuous (24 hours per day) basis until complete or advanced to such a point that use of the roadway can be returned to normal operation and any subsequent repairs can be completed during regular working hours.

D. The City reserves the right to determine which utility work will be considered an emergency. Any costs incurred by the Contractor for such emergency utility repair, including the cost of any additional traffic control that may be required, shall be the Contractor's sole responsibility.

3.08 EMERGENCY NO PARKING SIGNS

A. When it is necessary to eliminate parking on a part of a street to facilitate construction work, the Contractor shall, subject to the approval of the Public Works Department, post "Emergency No Parking" signs.

B. Signs shall be fabricated with the following dimensions, text sizes and include the follow text:

EMERGENCY NO PARKING DAY OR NIGHT	or	**EMERGENCY NO PARKING 7:00 A.M. to 6:00 P.M.**

Placard Height: 24 inches
Placard Width: 18 inches
Placard Color: Silver (reflective)

Lettering Height: 3 inches
Line Spacing: 1.1 inches
Lettering Color: Red

Border Thickness: 0.625 inches
Border Margin from Edge of Placard: 0.375 inches
Border Color: Red

C. The signs shall be made of aluminum, plastic or plywood panels. Paper or cardboard signs are not allowed.

D. The signs shall be installed on either steel drive posts or existing utility poles at a height of five (5) feet to the bottom of the sign.

E. Signs shall be placed on the side of the street where parking is to be eliminated.

F. The signs are to be installed at the beginning and end of each block and at a maximum of 150-feet intervals in between.
G. These signs must be installed a minimum of 18 hours and a maximum of 48 hours in advance of the time the Contractor plans to begin work.
H. The Contractor shall contact the City's representative as soon as the signs are installed. The City's representative will then contact the Public Works Department as soon as the signs are installed, so that a temporary regulation can be written by the Public Works Department and so that the Kansas City, Missouri, Police Department can be notified. The signs cannot be enforced without this notification from the City. The notification to the City must be made by 12 noon for enforcement to be effective the following day.
I. If there are existing parking signs with a lesser degree of restriction, the Contractor shall install the Emergency No Parking signs as outlined above and shall cover the existing signs with the Emergency No Parking sign or some type of semi-permanent cover (paper and tape will not be accepted).
J. The Contractor shall immediately remove the Emergency No Parking signs and all semi-permanent sign covers as soon as work on the block has been completed.
K. If it becomes apparent for any reason that work will cease for more than 72 hours, the same signs and covers shall be removed and must be reinstalled subject to the minimum 18 hours advance-notice before work can proceed.
L. If work does not begin within 48 hours after the signs are posted, the same procedure must be followed. Failure by the Contractor to abide by all the provisions concerning "Emergency No Parking" signs, shall result in the cancellation of the permit.
M. The Contractor shall maintain a minimum of one (1) lane of traffic each direction at all times unless otherwise allowed by permit.
N. The Contractor shall keep residents, schools, businesses, churches and other public entities informed of the work schedule that would interfere with access to their facility. Notification shall be distributed at least 3 weeks in advance of work occurring near a facility.
O. The Contractor shall coordinate with KCATA, as necessary, on proposed lane closures impacting bus travel routes.

END OF SECTION

SECTION 01900 – CONTRACT CLOSEOUT

PART 1 - GENERAL

1.01 SUMMARY

A. This Section includes administrative and procedural requirements for contract closeout.

B. Closeout requirements for specific construction activities are included in the appropriate Sections of the Contract Documents.

1.02 SPECIFICATION MODIFICATIONS

A. It is understood that throughout this Section these Specifications may be modified by appropriate items in Section 01015 – Specific Project Requirements, or as otherwise indicated on the Contract Drawings.

1.03 RELATED SECTIONS

A. Section 00700 – General Conditions.

B. Section 00800 – Supplementary Conditions.

C. Section 01015 – Specific Project Requirements.

D. Section 01020 – Record Documents.

E. Section 01300 – Submittals.

1.04 DEFINITIONS

A. Achievement of Full Operation/Substantial Completion: See Section 00700 – General Conditions, paragraph 1.01.

B. Substantial Completion: See Section 00700 – General Conditions, paragraph 1.01.

1.05 INFORMATION PROVIDED BY THE CITY

A. Achievement of Full Operation or Substantial Completion (Section 00700, paragraph 14.04):

1. If applicable, City will provide written notification that the Work does not meet the requirements for Achievement of Full Operation or Substantial Completion
2. Certification of Achievement of Full Operation (Section 01290.12) or Certificate of or Substantial Completion.
3. Written recommendation as to division of responsibilities pending final payment between City and Contractor with respect to security, operation, safety, protection of the Work, maintenance, heat, utilities, insurance and warranties and guarantees.

B. Partial Utilization (Section 00700, paragraph 14.05):

1. Written request for partial utilization.

C. Punch list (Section 01290.13).

D. Final Inspection (Section 00700, paragraph 14.06):

1. Written report of all in which the Final Inspection reveals that the Work is incomplete or defective.

1.06 SUBMITTALS

A. Submit as specified in Section 01300 – Submittals.

B. Other Submittals:

1. Notification of Achievement of Full Operation or Substantial Complete (Section 00700, paragraph 14.04.A).
2. List of Incomplete Items (Section 00700, paragraph 14.04.A).
3. Notification that the Work is complete and ready for Final Inspection (Section 00700, paragraph 14.06.A).
4. List of Uncompleted Work (paragraph 3.01.C).
5. Certification of Partial Substantial Completion (Section 00700, paragraph 14.05.A.1) if Partial Utilization is requested by City.
6. Closeout Documentation:
   (a) The following items are required to be submitted prior to the Contractor's application for Final Payment as required by Section 00700 – General Conditions, paragraph 14.07:
      (i) Maintenance and Operating Instructions.
      (ii) Schedules.
      (iii) Guarantees.
      (iv) Bonds.
      (v) Certificates or other evidence of insurance.
      (vi) Certificates of inspection.
      (vii) Record Documents (Section 01020 – Record Documents).
   (b) The following items are required to be submitted with the Contractor's application for Final Payment as required by Section 00700 – General Conditions, paragraph 14.07:
      (i) Contractor Affidavit for Final Payment (Section 01290.14).
      (ii) Subcontractor Affidavit for Final Payment (Section 01290.15).
   (c) Authorization to Release a Revenue Clearance Letter (Section 00630).
   (d) All other documentation necessary for an Application for Progress payment (Section 00700, Article 14).
7. Consent of Surety to Make Final Payment certificate.

PART 2 - PRODUCTS

A. Not used.

PART 3 - EXECUTION

3.01 ACHEIVEMENT OF FULL OPERATION / SUBSTANTIAL COMPLETION

A. Refer to Section 00700 – General Conditions, Article 14.

B. Refer to Section 00800 – (Overflow Control Plan Consent Decree) Supplementary Conditions, paragraph SC-14.04 for additional information to define items of the Work to be included in the definition of Achievement of Full Operation or Substantial Completion.

C. List of Uncompleted Items: The Contractor shall submit a list of incomplete items that are required for the Work, but not required for Achievement of Full Operations / Substantial Completion. The list shall include a description of the Work, the value of each item, reasons the work is not complete, and a schedule for completion.

D. The inspection associated with the Achievement of Full Operation / Substantial Completion will be scheduled at a mutually agreed time between the Contractor, Design Professional and the City's Representative.
E. City will provide a punch list (Section 01290.13) of items that require completion or correction. Items noted on the punch list may not be all-inclusive and the failure to include any items on the list does not alter the responsibility of the Contractor to complete all the Work in accordance with the Contract Documents.
F. Items identified in the punch list shall be addressed by the Contractor prior to the Final Inspection.

3.02 PARTIAL UTILIZATION

A. Refer to Section 00700 – General Conditions, paragraph 14.05, Partial Utilization.

3.03 FINAL INSPECTION

A. Refer to Section 00700 – General Conditions, paragraph 14.06, Final Inspection.
B. The Final Inspection will be scheduled at a mutually agreed time between the Contractor, Design Professional and City's Representative.
C. The City will provide the Contractor with the results of the final inspection.
D. If the Work is incomplete or unacceptable, the City will advise the Contractor of Work that is incomplete or other obligations that have not been fulfilled but are required for final acceptance. The Contractor shall address items that need to be corrected, and then request a re-inspection of the Work.
E. Re-inspection of the Work:
   1. If necessary, the City will re-inspect the Work upon receipt of notice that the Work, including punch list items from the first inspection, has been completed, except for items whose completion is delayed under circumstances acceptable to the City.
   2. If necessary, re-inspections will be repeated until all deficiencies have been remedied by the Contractor.

A. Approval of the Work by the City or Design Professional will not relieve the Contractor of their responsibility under other terms of the Contract.

3.04 FINAL PAYMENT

A. After Contractor has completed all corrections (after the Final Inspection) to the satisfaction of City, Contractor shall submit the Final Payment request. Refer to Section 00700 – General Conditions, paragraph 14.07, Final Payment.
B. Documents to be submitted with, or prior to, the application for final payment shall be as required by the Contract Documents. See paragraph 1.06 for a summary.
C. Authorization to Release a Revenue Clearance Letter: If the Contract exceeds $160,000 and if Work is performed for a term longer than one (1) year, then in addition to the requirements of Section 00700, the Application for Final Payment shall be accompanied by a clearance letter from the Finance Department, Revenue Division. The Contractor shall keep a copy of all subcontractors' clearance letters in its contract files in accordance with the contract documents. See Section 00630.
D. For Contracts that include a Green Infrastructure Establishment Period, there will be a Final Payment for the Work associated with construction, and a separate Final Payment for the Work associated with the maintenance of green infrastructure through the establishment period. The Final Payment for Work associated with construction shall exclude the amount for maintenance of green infrastructure indicated in the Schedule of Values.

3.05 LIQUIDATED DAMAGES

A. If required, liquidated damages shall be assessed in accordance with the Contract Documents. Refer to Section 00700 – General Conditions, paragraph 12.01 and Section 00800. See Supplementary Conditions, paragraph SC-12.01 for additional information.

END OF SECTION

SECTION 02180 – CLEARING AND GRUBBING

PART 1 - GENERAL

1.01 SUMMARY

A. Clearing and grubbing, within the Site and as indicated in the Contract Documents, shall consist of the removal and disposal of all trees, stumps, roots, logs, shrubs, grass, weeds, fallen timber, trash (surface and buried), buildings, foundations, fences and all other material designated for removal and disposal.

1.02 SPECIFICATION MODIFICATIONS

A. It is understood that throughout this section these Specifications may be modified by appropriate items in Section 01015 – Specific Project Requirements and as indicated in the Contract Documents.

1.03 RELATED SECTIONS

A. Section 01015 – Specific Project Requirements.
B. Section 02190 – Demolition.
C. Section 02200 – Earthwork.
D. Section 02575 – Restoration.
E. Section 02949 – Tree Protection, Removal and Replacement.

1.04 CODES AND STANDARDS

A. Note used.

1.05 DEFINITIONS

A. Clearing – The removal and disposal of all materials such as trees, brush, fallen timber and other materials found on or above the surface of the site. It shall include, but is not limited to, the removal of the following: buildings (see also Section 02190 – Demolition), fences, lumber, trash and other waste. Salvaging and disposing of the materials shall be as specified in this section and in the Contract Documents.
B. Scalping – The removal and disposal of material such as: sod, grass, weeds, agricultural crops, bushes, brush and all decayed vegetative matter from the surface of the ground without disturbing the earth more than is necessary.
C. Grubbing – The removal and disposal of all material such as stumps, roots, buried debris, foundations and trash encountered below the surface of the ground that has not been included in the description of clearing.
D. Trees – Woody growth having a diameter of 2 inches or greater as measured 4.5 feet above the ground.
E. Brush – Dense vegetation consisting of shrubs, bushes and small trees less than 2 inches in diameter as measured 4.5 feet above the ground.

1.06 INFORMATION PROVIDED BY THE CITY

A. As provided in the Contract Documents.

1.07 SUBMITTALS

A. Submit as specified in Section 01300 – Submittals.
B. Other Submittals:
   1. All permits required for the Work specified in this section.

2. Landfill Information. The Contractor shall submit for review and approval all proposed landfill sites to be used for the disposal of debris resulting from clearing and grubbing.

1.08 QUALITY ASSURANCE

A. The Contractor is responsible for the quality assurance and quality control of the Work.

1.09 PRODUCT DELIVERY, STORAGE AND HANDLING

A. Salvaged materials shall be handled, stored and delivered as specified in Section 01015 – Specific Project Requirements.

1.10 LIMITS OF WORK

A. The limits of clearing and grubbing shall extend to the construction limits unless otherwise shown on the Drawings. Clearing should only occur in those areas required for construction within a six-month period.
B. Large projects shall be cleared and grubbed as construction progresses. Mass clearing and grubbing shall be avoided.
C. An undisturbed strip of not less than 25 feet in width consisting of existing grass or other vegetation shall be kept in place around the perimeter of the construction site and protected from damage. The Contractor shall scalp only those areas necessary for the construction of the project.

PART 2 - PRODUCTS

Not used.

PART 3 - EXECUTION

3.01 PERIMETER EROSION AND SEDIMENT CONTROLS

A. Perimeter erosion and sediment controls shall be installed prior to the start of clearing and grubbing the Site.
B. When needed for the installation of perimeter controls, limited clearing and grubbing will be allowed to accommodate the Contractor's perimeter installation operation.

3.02 PRESERVATION OF TREES

A. All work associated with trees shall be done in accordance with Section 02949 - Tree Protection, Removal and Replacement. No trees shall be removed outside the excavated area or outside filled areas, unless their removal is indicated on the Drawings or as authorized by the City in accordance with Section 02949.
B. Trees left standing shall be protected from permanent damage by construction operations in accordance with Section 02949 - Tree Protection, Removal and Replacement.

3.03 NOTIFICATIONS

A. The Contractor shall notify property owners at least one (1) week in advance of removing any special plantings (flowers, ornamental trees, bushes, plants, etc…) so that the property owner has a reasonable opportunity to transplant prior to the Contractor's work activities.

3.04 CLEARING

A. Trees located within the permanent easement and temporary construction easement shall be removed as indicated on the Drawings and in accordance with Section 02949.

B. Clearing shall consist of removing all materials such as trees, brush, downed timber, trash, waste and other objectionable materials found on or above the surface of the site.
C. The Contractor shall tag or identify existing trees, shrubs and landscape materials to be removed; and obtain City approval prior to removal in accordance with Section 02949.

3.05 SCALPING

A. Scalping shall include the removal and disposal of material such as: sod, grass, weeds, agricultural crops, bushes, brush and all decayed vegetative matter from the surface of the ground without disturbing the earth more than is necessary.

3.06 GRUBBING

A. Grubbing shall consist of the removal and disposal of all material such as stumps, roots, buried debris, foundations and trash encountered below the surface of the ground that has not been included in the description of clearing.
B. The vegetative matter shall be removed to the following depths:
   1. A minimum depth of 12 inches below ground line or subgrade, whichever is lower.
   2. A minimum depth of 18 inches below ground line or subgrade, whichever is lower, at water containment areas (berms, dams, levees, lagoons, ponds, dikes etc.).
C. Remove and dispose of all stumps, roots and other vegetative matter larger than 2 inches in diameter.
D. When materials encountered below grade that are detrimental to the proposed improvement, the material shall be removed to a depth necessary to provide adequate space for installation and support for the proposed improvement.

3.07 EMBANKMENT AREAS

A. Unless otherwise noted on the plans, where undisturbed stumps and roots are encountered and the fill depth will exceed 3 feet, the stumps and roots may be left in place provided they do not extend above final grade.

3.08 BORROW AREAS

A. All stumps, roots and other objectionable matter shall be removed from the borrow material used for embankment or fill. The borrow area shall be left in a well-drained and smooth condition and restored in accordance with Section 02575 – Restoration.

3.09 BACKFILL

A. Backfill all holes, pits and depressions resulting from clearing and grubbing.
B. Backfill with suitable material placed and compacted in conformance with Section 02200 – Earthwork and grade the area to drain.

3.10 DISPOSAL OF MATERIAL

A. Dispose of all materials from the clearing and grubbing operations at a City approved location, as arranged for by Contractor, at no additional cost to City.
B. Unless otherwise specified in Section 01015 – Specific Project Requirements or other portions of the Contract Documents, the Contractor may claim and salvage any material which the Contractor may consider of value but shall not delay any work associated with the Contract by the salvaging operations.
C. Open burning of brush or debris on the Site is not allowed unless approved by the City. If approved by the City, the Contractor shall obtain all permits required for open burning.

END OF SECTION

SECTION 02190 - DEMOLITION

PART 1 - GENERAL

1.01 SUMMARY

A. This section covers miscellaneous site demolition (i.e., curbs, gutters, sidewalks, pavement, fencing, structures, etc...) and the disposal of the demolition debris associated with the Work.

1.02 SPECIFICATION MODIFICATIONS

A. It is understood that throughout this section, these Specifications may be modified by appropriate items in Section 01015 – Specific Project Requirements or as indicated in the Contract Drawings.

1.03 RELATED SECTIONS

A. Section 00700 – General Conditions.
B. Section 01015 – Specific Project Requirements.
C. Section 02575 – Surface Restoration.
D. Section 02676 – Sewer Line Cleaning.
E. Section 02949 – Tree Protection, Removal and Replacement.

1.04 CODES AND STANDARDS

A. All applicable OSHA standards.

1.05 DEFINITIONS

A. Demolition Debris:
   1. Site clearing debris, materials resulting from excavation, building demolition and waste materials from the construction of buildings. Demolition debris includes, but is not limited to, concrete, asphalt, brick, reinforcing steel, existing pipe and fittings.
   2. Demolition debris shall not include environmental pollutants, hazardous substances, contaminated products, by-products, samples or waste materials of any kind that are regulated under environmental laws.
   3. Demolition debris shall not include waste material resulting from sewer cleaning activities. This material shall be disposed in accordance with Section 02676 – Sewer Line Cleaning.
B. Earthen and Rock Materials – Soil, rock and gravel are not considered demolition debris and shall be disposed of in accordance with Section 02200 – Earthwork.

1.06 INFORMATION PROVIDED BY THE CITY

A. As provided in the Contract Documents.

1.07 SUBMITTALS

A. Submit as specified in Section 01300 – Submittals.
B. Other Submittals:
   1. Landfill Information – The Contractor shall submit for approval all proposed landfill sites to be used for the disposal of demolition debris. Submittals shall include a copy of the permit authorizing disposal at each landfill and whether the

landfill is within or outside the corporate city limits of the City of Kansas City, Missouri.

1.08 QUALITY ASSURANCE

A. The Contractor is responsible for the quality assurance and quality control of the Work.

1.09 MATERIAL DELIVERY, STORAGE AND HANDLING

A. As specified in the Contract documents.

1.10 APROVED LANDFILLS

A. All demolition debris shall be disposed of at a legal landfill or at a site where dumping of such materials is allowed under federal, state and local laws.
B. Legal landfills for demolition debris are permitted by the Kansas City Board of Zoning Adjustment. For further information on approved dumpsites contact the City Planning and Development Department:

Development Management Division
Phone: (816) 513-1500.

C. No demolition work shall be initiated until the landfill to be used for disposal has been approved in accordance with paragraph 1.07 SUBMITTALS.

1.11 USE OF UNAUTHORIZED LANDFILLS

A. The disposal of demolition debris in an unauthorized landfill (whether intentional or inadvertent) is a violation of local ordinances and is prohibited. Failure to immediately remedy such a violation will be a considered a failure of the Contractor to perform the Work in accordance with the Contract Documents.
B. In the event of such a violation, the Contractor shall be subject to all local ordinance penalties.
C. If illegal dumping is suspected, the City will provide notice of the violation to the Contractor in accordance with Section 00700 – General Conditions, Article 17.
D. Upon receipt of the notification, the Contractor shall have five (5) working days to submit documentation that an authorized landfill was used or to submit a Remediation Plan to correct the violation.
E. Remediation Plan:
    1. The Contractor shall submit a plan and schedule to relocate the demolition debris from the unauthorized landfill to an approved landfill and restore the unauthorized landfill to its previous condition.
    2. Upon approval of the plan by the City, the Contractor shall have no more than 15 calendar days to complete the work associated with the Remediation Plan.
F. The work associated with the Remediation Plan and all penalties assessed for the violation is the sole responsibility of the Contractor. No additional payment will be made by the City and no adjustments to the Project Schedule will be made.

PART 2 - PRODUCTS

Not used.

PART 3 - EXECUTION

3.01 DEMOLITION

A. Remove existing structures, materials and debris as required to perform the Work and to install the improvements as shown on the Drawings.

B. Equipment and Materials to be returned to the City:
   1. Equipment and materials that are to be removed and returned to the City shall be as specified in Section 01015 – Specific Project Requirements.
   2. Carefully remove or dismantle, in a manner to avoid damage, all materials and equipment indicated to be relocated or returned to the City.
   3. Any material or equipment which is specified or indicated to be relocated or returned to the City that is damaged by the Contractor, an assessment of condition/damage shall be made by the City/Design Professional and it shall be repaired or replaced at the Contractor's sole expense.

C. Re-use of Materials and Equipment:
   1. Equipment and materials that are to be re-used on the Project shall be as specified in Section 01015 – Specific Project Requirements.
   2. Remove and store in a manner to avoid damage, staining and corrosion of materials; refurbish materials and equipment as required and reinstall as indicated in the Contract Documents.

D. Materials not indicated or specified to be reused, relocated or returned to the City shall become the property of the Contractor and shall be disposed of as specified in this Section.

E. Perform demolition work in such a manner to protect existing facilities, utilities, structures and property which are to remain, against damage from the Contractor's operations. Existing structures within or adjacent to the Site which are not to be removed or demolished shall be protected by the Contractor during construction. All private facilities, such as water service lines or sanitary sewer service laterals, which are disturbed or damaged by the Contractor's work shall be repaired by the Contractor prior to the close of the workday. The temporary repair shall be made in a manner sufficient to restore utility service to that property. The permanent repair shall be made the next calendar day.

F. Make provisions for temporarily accommodating flows in existing facilities that are to be relocated or disturbed.

G. Take precautions to guard against movement or settlement and provide shoring and bracing as necessary.

H. If at any time the safety of the existing structure to remain is endangered, cease operations, notify the City/Design Professional and do not resume operations until receiving the City's/Design Professional's approval.

I. Remove concrete by jack hammering, sawing, core drilling or other approved method.

J. Remove existing pavement by jack hammering, sawing, digging or other approved methods. Pavement shall be sawed at points where indicated on the Drawings. If not indicated on the Drawings, pavement shall be sawed at points to meet the requirements of applicable permits and the requirements of Section 02575 - Surface Restoration.

END OF SECTION

SECTION 02200 – EARTHWORK

PART 1 - GENERAL

1.01 SUMMARY

A. This section covers earthwork associated with general excavation, backfill and compaction required for the Work.

B. This section also covers the handling, storage, transportation and disposal of all excavated material; sheeting and shoring, subgrade preparation, dewatering as necessary or required, protection of adjacent property, construction of fills and embankments, surfacing and grading; and other appurtenant work.

C. Additional requirements for excavation, backfill and compaction for trenching can be found in Section 02250 – Trenching, Pipe Embedment and Backfill.

1.02 SPECIFICATION MODIFICATIONS

A. It is understood that throughout this section these Specifications may be modified by appropriate items in Section 01015 – Specific Project Requirements or as otherwise indicated on the Contract Drawings.

1.03 RELATED SECTIONS

A. Section 00700 – General Conditions.
B. Section 01000 – General Project Requirements.
C. Section 01015 – Specific Project Requirements.
D. Section 02180 – Clearing and Grubbing.
E. Section 02190 – Demolition.
F. Section 02250 – Trenching, Pipe Embedment and Backfill.
G. Section 02230 – Geotextiles.
H. Section 02930 – Seeding.
I. Section 02931 – Sodding.

1.04 CODES AND STANDARDS

A. The publications listed below form a part of this specification to the extent referenced. The publications are referred to within the text by the basic designation only.

B. American Society for Testing and Materials (ASTM):

ASTM D698	Standard Test Methods for Laboratory Compaction Characteristics of Soils Using Standard Effort (12,400 ft-lbf/ft3).
ASTM D1556	Standard Test Method for Density and Unit Weight of Soil in Place by Sand-Cone Method.
ASTM D2167	Standard Test Method for Density and Unit Weight of Soil in Place by the Rubber Balloon Method.
ASTM D4318	Standard Test Methods for Liquid Limit, Plastic Limit and Plasticity Index of Soils.
ASTM D4546	Standard Test Method for One-Dimensional Swell or Collapse of Soils.
ASTM D6938	Standard Test Method for In-Place Density and Water Content of Soil and Soil-Aggregate by Nuclear Methods (Shallow Depth).

C. City of Kansas City, Missouri Department of Public Works, Construction and Material Specifications (http://kcmo.gov/publicworks/design-construction-standards/) KCMO PW 2202, Subsection 2202, Untreated Compacted Aggregate.
D. Kansas Department of Transportation, Standard Specification and Construction Manual, Division 1100, Aggregates.
E. Missouri Department of Transportation, Missouri Standard Specifications for Highway Construction, Division 1000, Materials Details.

1.05 DEFINITIONS

A. Paved Areas – Areas for which the final surfacing will be street pavement, shoulders, driveways, parking lots, curbs, gutters, sidewalks, gravel roads or other surface features.
B. Unpaved Areas – Areas for which the final surfacing will be in a green space.

1.06 INFORMATION PROVIDED BY THE CITY

A. As provided in the Contract Documents.

1.07 SUBMITTALS

A. Submit as specified in Section 01300 – Submittals.
B. Shop Drawings:
   1. Sheeting and Shoring Plan – Prior to excavation, the Contractor shall submit a shoring design that is signed and sealed by a registered professional engineer in the State of Missouri for all excavations greater than twenty (20) feet in depth (in accordance with 29 CFR Past 1926 - OHSA Subpart P - Excavations and Trenches). Submittal will be for informational purposes only.
C. Testing Reports:
   1. Laboratory testing results for proposed Borrow Materials.
   2. Laboratory testing results and quarry control reports for Granular Material.
   3. Laboratory testing results for and quarry control reports Granular Bedding.
   4. Moisture-density (Proctor) test results.
   5. In-Place Density test results.
D. Other Submittals:
   1. Commercial Laboratory – submit name, contact information and certification of the commercial testing laboratory required by paragraph 1.08.
   2. Blasting (as applicable):
      (a) Pre-blast survey.
      (b) Monitoring Plan.
      (c) Permit for blasting.
      (d) Post-blast survey.

1.08 QUALITY ASSURANCE

A. The Contractor is responsible for the quality assurance and quality control of the Work.
B. Sampling and Testing:
   1. Tests to determine conformance with all requirements of this Specification for quality and properties of all Contractor-secured materials, including borrow materials proposed for use, shall be performed by an independent, state-certified, commercial laboratory retained and compensated by the Contractor and approved by the City/Design Professional.

2. All work associated with QUALITY ASSURANCE shall be included in the Bid Price and will be incidental to the Work. No separate measurement or payment will be made.

1.09 PRODUCT DELIVERY, STORAGE AND HANDLING

A. The City will furnish the Site in accordance with Section 00700 – General Conditions.
B. See Section 01000 – General Project Requirements, paragraph EASEMENTS AND RIGHT-OF-WAY for use of private property for delivery, storage and handling.
C. Perform in a manner to prevent contamination or segregation of materials.

1.10 EXISTING UTILITES

A. The Contractor shall notify utilities prior to excavation in accordance with Section 00700 – General Conditions, Article 6 – Contractor's Responsibilities, paragraph NOTIFICATION OF ULTILITIES.
B. Movement of construction machinery and equipment over pipes and utilities during construction is at the Contractor's sole risk.
C. For work immediately adjacent to or for excavations exposing a utility or other buried obstruction, excavate by hand, start hand excavation on each side of the indicated obstruction and continue until the obstruction is uncovered or until clearance for the new grade is assured.
D. Support uncovered lines or other existing work affected by the excavation until approval for backfill is granted by the City.
E. Report damage to utility lines or subsurface construction immediately to the City.

PART 2 - PRODUCTS

2.01 MATERIALS ENCOUNTERED

A. Suitable Materials – Materials suitable for use in backfill, fill and embankment include job excavated or borrow material that is free of debris, roots, organic matter, frozen matter and shale particles/rock/stone or gravel with all dimensions less than 2 inches:
   1. Cohesion-less materials include gravels, gravel-sand mixtures, sands and gravelly sands; generally exclusive of clayey and silty material with the following properties:
      (a) Free-draining.
      (b) Impact compaction will not produce a well-defined moisture-density relationship curve.
      (c) Maximum density by impact methods will generally be less than by vibratory methods.
      (d) Generally less than 15% by dry weight of soil particles pass a No. 200 sieve.
   2. Cohesive materials include materials made up predominately of silts and clays generally exclusive of sands and gravel with the following properties:
      (a) Impact compaction will produce a well-defined moisture-density relationship curve.
      (b) Are not free draining.
B. Unsuitable Materials – Materials unsuitable for use in backfill, fill and embankment include all material that contains debris, roots, organic matter, frozen matter, shale particles/rock/stone or gravel with any dimension greater than 2 inches.

Additionally, as determined by the City/Design Professional, any other materials that are too wet or otherwise unsuitable for providing a stable subgrade or stable foundation for structures or trenches.

C. Material used for embankment or fill:
   1. For soils used below structural elements (such as: footings, slabs, pavements and mats), the portion of material passing the No. 40 sieve shall have a liquid limit not exceeding 40 and a plasticity index not exceeding 25 when tested in accordance with ASTM D4318.

2.02 TOPSOIL

A. On-Site Topsoil – Surface soil stripped and stockpiled on site and modified as necessary to meet the requirements specified herein. When available, topsoil must be existing surface soil stripped and stockpiled on the Site.

B. Off-Site Topsoil – Conform to requirements specified herein. Additional topsoil must be furnished by the Contractor.

C. Composition – Natural, friable soil representative of productive, well-drained soils in the area, free of subsoil, stumps, rocks larger than 1- inch diameter, brush, weeds, toxic substances and other material detrimental to plant growth. Amend topsoil pH range to obtain a pH of 5.5 to 7.

D. Topsoil shall be of a quality at least equal to the existing topsoil in adjacent areas, free from trash, stones, debris and well suited to support plant growth.

2.03 SOIL CONDITIONS

A. All Materials encountered, regardless of type, character composition and condition shall be considered "unclassified" for the purpose of payment. Determine quantity of various materials to be excavated prior to submitting Bid. Rock encountered shall be handled at no extra cost to City.

2.04 WASTE MATERIALS

A. Waste materials, as described for purposes of this Section, consist of unsuitable materials such as: rock, surplus excavated material, demolition debris and other materials considered unacceptable for use as fill.

B. Waste materials shall not include environmental pollutants, hazardous substances, contaminated products, by-products, samples or waste materials of any kind that are regulated under environmental laws.

C. Dispose of Demolition Debris in accordance with Section 02190 – Demolition. Dispose of other waste materials in accordance with Paragraph DISPOSAL OF EXCAVATED MATERIALS.

2.05 BORROW MATERIALS

A. Suitable fill materials, granular materials and topsoil obtained from locations arranged for by Contractor (off the Site) are required to the extent sufficient suitable materials cannot be obtained from excavation and trenching.

B. Borrow materials shall not exhibit characteristics of high shrink or swell potential as determined from Atterberg limit tests (ASTM D4318) and/or swell tests (ASTM D4546) unless otherwise specified herein.

2.06 GRANULAR FILL MATERIAL

A. Granular fill material shall consist of crushed stone, sand and gravel or reclaimed asphalt or concrete. The aggregate shall not contain more than 15 percent deleterious

rock and shale. The fraction passing the No. 40 sieve shall have a plasticity index not to exceed six. Any sand, silt, clay and any deleterious rock and shale shall be uniformly distributed throughout the material.

B. Reclaimed asphalt or concrete materials meeting the requirements of aggregate must be approved for use by the City.

C. Granular fill material shall be in accordance with the following gradation requirements defined in Table 1 below:

Table 1. Gradation for Granular Fill Material

Sieve Size	Mass Percent Passing		
	MoDOT Type 5	**KDOT Type AB-3**	**KCMO PW 2202****
2 inch		100	
1 ½ inch		95 to 100	
1 ¼ inch			100
1 inch	100		72 to 100
¾ inch		70 to 95	60 to 90
½ inch	60 to 90		
3/8 inch			43 to 74
No. 4	35 to 60	40 to 65	28 to 60
No. 8		30 to 55	
No. 10			16 to 40
No. 30	10-35		
No. 40		16 to 40	3 to 22
No. 200	0-15	8 to 20*	0 to 15**

* For Type AB-3, the fraction passing the No. 200 sieve shall not exceed ¾ of the fraction passing the No. 40 sieve.

** For KCMO PW 2200, the difference between Mass Percent Passing of successive sieve sizes shall not exceed 25%. That fraction of material passing the No. 40 sieve shall have a plasticity index not to exceed 8.

1. MoDOT Type 5 material shall conform to Missouri Department of Transportation, Standard Specifications for Highway Construction, Section 1007, Type 5 Aggregate.
2. KDOT Type AB-3 material shall conform to Kansas Department of Transportation, Standard Specification and Construction Manual, Division 1100, Aggregates.

2.07 GEOTEXTILE

A. Geotextile shall conform to the requirements of Section 02230 – Geotextiles.

2.08 CONTROLLED LOW STRENGTH MATERIAL (CLSM)

A. See Section 02250 – Trenching, Pipe Embedment and Backfill.

PART 3 - EXECUTION

3.01 DEMOLITION

A. Demolition shall be conducted in accordance with Section 02190 – Demolition.

3.02 CLEARING AND GRUBBING

A. Perform clearing and grubbing, in accordance with Section 02180 – Clearing and Grubbing, as indicated and as required to perform the Work.

3.03 STRIPPING

A. Stripping shall consist of scraping areas clean of all brush, grass, weeds, roots and other materials.
B. Remove topsoil from areas within limits of excavation, trenching, borrow and areas designated to receive fill.
C. Strip to a minimum depth of 6 inches, but to a sufficient depth to remove excessive roots in heavy vegetation, unsuitable material or brush areas and as required to remove all soil containing organic material or segregate topsoil.
D. Stockpile topsoil in areas designated or approved by the City/Design Professional where it will not interfere with construction operations or existing facilities. Stabilize and protect stockpiles from runoff per the SWPPP plan.

3.04 GENERAL REQUIREMENTS FOR OPEN EXCAVATIONS

A. Excavations shall be restored to the level of the adjacent surfaces as soon as practicable.
B. Unsupervised or unprotected excavations are prohibited. The Contractor shall adhere to the City's no open excavation policy.
C. Protective Measures in Paved Areas:
    1. Excavations within paved areas shall be protected and secured in accordance with existing federal, state and local codes and standards. This includes, but not limited to, the most current edition of the Manual of Uniform Traffic Control Devices.
D. Protective Measures Unpaved Areas:
    1. Supervision – As a temporary measure, the Contractor may provide personnel to supervise an open excavation that is not otherwise protected. Supervision shall ensure that the public is protected and shall serve the same function as a protective cover or fencing. A protective cover or fencing shall be installed for all excavations that are not supervised.
    2. Protective Cover – A protective cover shall be installed over the excavation so that it can sustain the weight of any persons and/or objects placed upon it. The cover shall be of sufficient weight or fixed to the ground so it cannot be moved. Protective covers shall have no opening(s) or protuberance(s) of sufficient size to cause a fall or injury. Advance warning devices shall be installed as required by the City/Design Professional.
    3. Fencing – Any excavation that is not covered shall be fenced in so that it surrounds the entire excavation area and prevents entry. The fencing shall be a minimum of 42 inches in height. The fence shall be secured and upright at all times.
E. Inspection and Maintenance – Protective measures (coverings and fences) shall be inspected by the Contractor at least daily to assure integrity. Protective measures in heavy traffic areas shall be inspected more often as necessary.

F. Excavation permits shall be secured prior to starting the work.

3.05 EXCAVATION

A. Excavations shall provide adequate working space and clearances for the work to be performed therein and for installation and removal of concrete forms.
B. In no case shall excavation faces be undercut for extended footings.
C. Subgrade surfaces shall be clean and free of loose material of any kind when concrete is placed thereon.
D. Classification of Excavated Materials – No classification of excavated materials will be made. Excavation and trenching work shall include the removal and subsequent handling of all materials excavated or otherwise removed in performance of the work, regardless of the type, character, composition or condition thereof.

3.06 BLASTING

A. Unless otherwise noted in Section 01015 – Specific Project Requirements, blasting or other use of explosives for excavation will not be permitted
B. If allowed, blasting shall conform to all applicable ordinances, rules, regulations, permit requirements including Kansas City, Missouri Ordinance 180591 and the Missouri Blasting and Safety Act.
C. Contractor shall provide a plan for pre-blast surveys, monitoring during blasting and post blast surveys to City prior to use of explosives.
D. All existing safety regulations, permits, laws and ordinances regarding the storage, transportation and use of explosives shall be observed.
E. Blasting will be permitted only when proper precautions are taken for the protection of all persons, the work, private property and public utilities from damage or injury. Any damage done by blasting will be repaired by the Contractor at no additional cost to the City.

3.07 DEWATERING

A. Dewatering equipment shall be provided to remove and dispose of all surface water and groundwater entering excavations, trenches or other parts of the Work.
B. To prevent damage from hydrostatic pressure, flotation or other cause, all excavations shall be protected and kept dry during subgrade preparation and continually thereafter until the structure is built or the pipe is installed and the area is backfilled.
C. All excavations for concrete structures or trenches which extend down to or below groundwater shall be dewatered by lowering and keeping the groundwater level beneath such excavations 12 inches or more below the bottom of the excavation.
D. Surface water shall be diverted or otherwise prevented from entering excavations or trenches to the greatest extent possible without causing damage to adjacent property.
E. If the material within the excavation becomes unsuitable or unstable as a result of the Contractor's inability to implement adequate surface diversion or dewatering measures, then the Contractor shall remove unsuitable materials and replace with approved compacted fill material as directed by City and at no additional cost to the City.
F. Surface water and groundwater that contains silt and soil shall not be disposed of without pre-treatment.
G. The Contractor is responsible for the condition of any pipe, conduit or drainage way which is utilized for drainage purposes. Any such pipe, conduit or drainage way utilized shall be left clean and free of sediment.

3.08 SHEETING AND SHORING

A. The Contractor shall provide all shoring, bracing, cribbing, trench boxes, underpinning and sheeting as necessary to support excavations.

B. The Contractor shall provide a Sheeting and Shoring Plan that includes provisions that will accomplish the following:

1. Prevent undermining of pavements, foundations and slabs.
2. Prevent slippage or movement in banks or slopes adjacent to the excavation.
3. Allow for the abandonment of shoring and sheeting materials in place in critical areas as the Work is completed. In these areas, backfill the excavation to within 3 feet of the finished grade and remove the remaining exposed portion of the shoring before completing the backfill.
4. Except where banks are cut back on a stable slope, excavations for structures shall be supported as necessary to prevent caving or sliding.
5. Excavations shall provide adequate working space and clearances for the Work to be performed.
6. Undercutting of excavation faces is prohibited.

3.09 BACKFILL AND COMPACTION

A. See Section 02250 – Trenching, Pipe Embedment and Backfill for additional requirements.

B. Fills and embankments shall be constructed to the lines and grades indicated on the Drawings, using suitable material or as specified in Section 01015 – Specific Project Requirements.

C. Weather Limitations – Construction of fills and embankments during freezing weather shall not be done except by permission of the City/Design Professional. No fill or embankment materials shall be installed on frozen surfaces, nor shall froze material, snow or ice be placed in the fill or embankment.

D. To the extent possible, excess suitable material obtained from trench excavation can be used for the construction of fills and embankments. Additional material shall be provided as required.

E. After preparation of the fill or embankment site, the subgrade shall be leveled and rolled so that surface materials of the subgrade will be compacted and well bonded with the first layer of the fill or embankment and for subsequent layers.

F. All fill and embankment materials shall be placed in layers not to exceed 8 inches in un-compacted thickness.

G. Material deposited in piles or rows by excavating and hauling equipment shall be spread and leveled before compacting.

H. No shale particles, rock, gravel or stone with any dimension greater than 2 inches shall be placed in the upper 18 inches of any fill or embankment. Rocks or stones within the allowable size limit may be incorporated in the remainder of fills and embankments, provided they are distributed so that they do not interfere with proper compaction.

I. The material in each layer shall be wetted or dried as required and thoroughly mixed to ensure uniform moisture content and adequate compaction. Each layer shall be thoroughly compacted as follows:

1. Unpaved Areas:
   (a) 90% of maximum dry density at moisture content range from 3% below optimum to 2% above optimum as determined by ASTM D698.
   (b) If the material fails to meet the density specified, compaction methods shall be altered.

2. Paved Areas:
   (a) All subgrades below paved area and within 1 foot of a paved areas shall be compacted to 95% of maximum dry density at moisture content range from 3% below optimum to 2% above optimum as determined by ASTM D698 for the subgrade 1 foot outside of paved areas.
   (b) If the material fails to meet the density specified, compaction methods shall be altered.
3. Project specific requirements for backfill and compaction may be modified in Section 01015 – Specific Project Requirements.

J. Trenches in Embankments – Wherever a trench is to pass through a fill or embankment, the fill or embankment material shall be placed and compacted to an elevation not less than 36 inches above the top of pipe elevation before the trench is re-excavated.

K. Unless otherwise specified in Section 01015 – Specific Project Requirements, trenches and pipes that pass through a water-containing embankment shall eliminate the granular embedment material and the trench bottom shall be graded to provide uniform and continuous support for the pipe. The pipe shall be embedded in embankment material containing no rocks, stones or other pervious material. The embedment material shall be compacted as specified for the embankment.

3.10 GRANULAR FILLS

A. See Section 02250 – Trenching, Pipe Embedment and Backfill for additional requirements.

B. Granular fill material shall be provided where indicated on the drawings.

C. Granular fill material shall be placed on suitably prepared subgrades and compacted by vibration.

D. Backfill and Compaction – The material in each layer shall be wetted or dried as required and thoroughly mixed to ensure uniform moisture content and adequate compaction. Each layer shall be thoroughly compacted with a vibratory compactor to 95% of maximum dry density at moisture content range from 3% below optimum to 2% above optimum as determined by ASTM D698.

E. If the material fails to meet the density specified, compaction methods shall be altered.

F. Where granular fills are to be covered with concrete, the top surface shall be graded to the required subgrade.

3.11 FIELD QUALITY CONTROL

A. See Section 02250 – Trenching, Pipe Embedment and Backfill for additional requirements.

B. Compaction Tests:
   1. Two initial gradation tests shall be made for each type of embedment, fill and backfill material used and one additional gradation test shall be made for each additional 500 tons of each material. At the sole expense of the Contractor, moisture-density (Proctor) tests, relative density tests on the materials and all in-place field density tests shall be performed by the Contractor. All tests performed shall be done in accordance with ASTM D698.
   2. The method of in-place compaction testing including density and moisture content shall be as follows:

(a) Density - Cohesive materials: ASTM D2167, ASTM D1556 or ASTM D6938.
(b) Density - Cohesion-less materials: ASTM D6938.
(c) Moisture Content: ASTM D6938.

3. The minimum frequency of in-place compaction testing including density and moisture content will be as follows:
   (a) At least one test for every 2,000 cubic yards of material placed in a mass fill.
   (b) At least one test when the City suspects the quality of moisture control or effectiveness of compaction.
4. Any material/fill failing to meet required densities shall be removed, replaced and compacted as necessary to achieve specified results.
5. Removal of in-place material and replacement with approved new material will be required if scarifying and re-compaction do not produce the required densities.

3.12 EQUIPMENT

A. The Contractor shall utilize appropriate equipment to obtain the compaction requirements specified. Acceptable equipment includes, but is not limited to, the following:
   1. Tamping Rollers.
   2. Pneumatic Rollers.
   3. Vibratory Rollers.
   4. Other methods that have been tested and have been shown to meet the specified compaction rates.

B. Power tampers or rammers shall be used for the compaction of material in areas where it is impractical or unsafe to use heavy equipment or as recommended by the City.

C. Vibratory plate compactors, manual or attached to excavation equipment, may be used for consolidation of embedment and compaction of granular fill in areas where it is impractical or unsafe to use heavy equipment or as recommended by the City.

D. All compaction equipment is subject to the approval of the City/Design Professional.

3.13 FINAL GRADING AND PLACEMENT OF TOPSOIL

A. After all trenching, backfilling, compaction and embankments to be constructed have been rough graded, all areas shall be final graded to the indicated elevations, slopes and contours.

B. All cuts, fills, embankments and other areas which have been disturbed or damaged by construction operations shall be surfaced with at least 6 inches of topsoil to meet final grade.

C. Use of graders or other power equipment will be permitted for final grading and dressing slopes, provided the result is uniform and equivalent to manual methods.

D. All surfaces shall be graded to provide effective drainage. Unless otherwise indicated, a slope of at least 1 percent shall be provided.

E. Final grade shall be smooth, even and free from clods, rocks, stones, weeds, brush and other debris.

3.14 DISPOSAL OF EXCESS EXCAVATED MATERIALS

A. Except as otherwise permitted, all excess excavated materials shall be disposed of off-site.

B. Demolition Debris, see Section 02190 – Demolition.

C. Rock – Excavated rock in excess of the amount permitted to be installed in trench backfill (see Section 02250 – Trenching, Pipe Embedment and Backfill) shall be disposed of off-site.
D. Other Debris – Waste material and other debris encountered in during excavation shall be disposed of off-site.
E. The disposal of waste and surplus excavated materials, including hauling, handling and grading is incidental to Earthwork. No separate measurement or payment shall be made.

3.15 SEEDING AND SODDING

A. All areas disturbed by the Contractor's operations shall be seeded or sodded according to the requirements of Section 02930 – Seeding or Section 02931-Sodding.

3.16 SETTLEMENT

A. The Contractor is solely responsible for all settlement which may occur within the correction period (as stipulated in the General Conditions and Supplementary Conditions). Within 30 days after notice from the City, the Contractor shall make all settlement repairs and the associated restoration caused by correcting the settlement.

END OF SECTION

SECTION 02230 – GEOTEXTILES

PART 1 - GENERAL

1.01 SUMMARY

A. This section covers the furnishing of all labor, materials and equipment for the placement of geotextiles. This section is suitable for applications where the geotextile is used as a separation material to prevent mixing of dissimilar material and to control migration of backfill material through granular pipe embedment and joints in structural elements. Applications include, but are not limited to, the following:
   1. Geotextile above granular drainage layers.
   2. Geotextile below granular drainage layers.
   3. Geotextile around granular pipe embedment.
   4. Geotextile above the cover soil.
   5. Geotextile below the cohesive material layer.
   6. Geotextile as a bedding material for riprap.

B. This section does not cover geotextiles used for temporary silt fence, permanent erosion control, erosion control blankets, turf reinforcement mats or pavement applications.

1.02 SPECIFICATION MODIFICATIONS

A. It is understood that throughout this section these Specifications may be modified by appropriate items in Section 01015 – Specific Project Requirements or as otherwise indicated on the Contract Drawings.

1.03 RELATED SECTIONS

A. Section 01015 – Specific Project Requirements.
B. Section 02200 – Earthwork.
C. Section 02250 – Trenching, Pipe Embedment and Backfill.
D. Section 02273 – Riprap.

1.04 CODES AND STANDARDS

A. The publications listed below form a part of this specification to the extent referenced. The publications are referred to within the text by the basic designation only.

B. American Association of State Highway and Transportation Officials (AASHTO):

AASHTO M288	Standard Specification for Geotextile Specification for Highway Applications.

C. American Society for Testing and Materials (ASTM):

ASTM D4873	Standard Guide for Identification, Storage and Handling Geotextile Rolls and Samples.

1.05 SUBMITTALS

A. Submit as specified in Section 01300 – Submittals.
B. Product Data submittals:
   1. Geotextile Material:
      (a) 12-inch square sample of fabric.
      (b) Manufacturer's descriptive product data.

(c) Manufacturer's installation instructions.

C. Certificates submittals:

1. Geotextile Material – Furnish manufacturer's certification for each lot of material furnished. Certificate shall state the name of the manufacturer and the chemical composition of all materials, filaments or yarns used to manufacture. The Certificate shall state that the material supplied is in accordance with this specification. The certification shall also include the results of tests from specific lots for all specified requirements. Additionally, the certification shall contain a statement by the manufacturer that the material meets the requirements of AASHTO M288 and the Class/Classes specified for the project.

1.06 PRODUCT DELIVERY, STORAGE AND HANDLING

A. Store and handle geotextiles according to ASTM D4873. Do not use torn or punctured geotextiles.

B. Receive, store and handle geotextile materials as recommended by manufacturer.

C. Completely cover all materials while being stored on-site.

D. Damaged material shall be cut out and removed from the site.

PART 2 - PRODUCTS

2.01 GEOTEXTILE

A. A fibrous filter fabric shall be installed below the bedding material to increase soil stabilization.

B. Geotextile shall be manufactured with new, high quality materials designed specifically for filtering out soil fines while maintaining good drainage characteristics.

C. Geotextile shall be manufactured and packaged so as to be free of tears, punctures and contamination by foreign matter. Any such defect found in the material on-site shall be repaired or replaced in accordance with the manufacturer's recommendations.

D. Geotextile shall be woven or nonwoven, polyester or polypropylene material that complies with the physical and geotextile property requirements for subsurface drainage, separation and stabilization in accordance with AASHTO M288.

1. Subsurface Drainage Geotextile:

(a) Subsurface drainage geotextile shall be used as a filter to protect drainage media from clogging with fines from adjacent soil. Typical applications include the lining of drainage trenches and the wrapping of drain pipes.

(b) The minimum permittivity shall be 1.0 sec-1.

(c) Material shall be AASHTO M288, Class 2.

2. Separation Geotextile:

(a) Separation geotextile shall be used as a material to prevent the mixing of dissimilar material and to control migration of backfill material through granular pipe embedment or joints in structural elements. Additionally, separation geotextiles shall be used as a bedding material/filter layer for riprap.

(b) The minimum permittivity shall be 1.0 sec-1.

(c) The material shall be AASHTO M288, Class 1.

E. The type of geotextile (either woven or nonwoven) shall be as indicated on the Drawings or as specified in Section 01015 – Specific Project Requirements.

PART 3 - EXECUTION

3.01 SUBGRADE PREPARATION

A. Prepare subgrade in accordance with Section 02200 – Earthwork or Section 02273 – Riprap.
B. All surfaces to be lined shall be smooth, free of all debris, foreign material and sharp objects.
C. All surfaces to be lined shall have a firm foundation with no sharp or abrupt breaks in grade.
D. Do not place fabric on snow or standing water. Prior to fabric installation, all surfaces to be lined shall be dry – free of standing water and surface moisture.

3.02 INSTALLATION

A. Install geotextile on prepared surfaces following procedures specified herein and in accordance with the manufacturer's installation instructions.
B. Unroll panels as close to their final position as possible.
C. Filter fabric joints shall be lapped in accordance with the manufacturer's installation instructions, but not less than least 3 feet.
D. A minimum 2 percent slack shall be provided in both directions.
E. Fabric shall be installed in conformity with all other manufacturer's requirements.
F. Adhere to the following stipulations while working with or near geotextile fabric:
    1. Smoking is prohibited.
    2. Remove all glass, metal and other sharp objects from the application area.
    3. No construction installation equipment shall pass over any exposed fabric.
    4. Geotextile shall be covered within 5 calendar days after placement.
    5. As applicable, the placement of cover soil shall be by low pressure equipment (2-4 psi). Place cover soil in the direction of the seam overlaps and in a manner that does not pull, separate or puncture the geotextile. Spreading equipment and hauling equipment shall not make sudden stops or sharp turns when spreading cover soil over the geotextile.

3.03 INSTALLATION FOR TRENCH APPLICATIONS

A. See Section 02250 – Trenching, Pipe Embedment and Backfill for additional requirements.

END OF SECTION

SECTION 02250 – TRENCHING, PIPE EMBEDMENT AND BACKFILL

PART 1 - GENERAL

1.01 SUMMARY

A. This section specifies requirements for trench excavation, pipe embedment, backfill and compaction for the installation of water, sanitary sewer and storm water piping.

1.02 SPECIFICATION MODIFICATIONS

A. It is understood that throughout this section these Specifications may be modified by appropriate items in Section 01015 – Specific Project Requirements or as otherwise modified in the Contract Documents.

1.03 RELATED SECTIONS

A. Section 01000 – General Project Requirements.
B. Section 01015 – Specific Project Requirements.
C. Section 02180 – Clearing and Grubbing.
D. Section 02190 – Demolition.
E. Section 02200 – Earthwork.
F. Section 02230 – Geotextiles.
G. Section 02575 – Surface Restoration.
H. Section 02930 – Seeding.
I. Section 02931 – Sodding.

1.04 CODES AND STANDARDS

A. The publications listed below form a part of this specification to the extent referenced. The publications are referred to within the text by the basic designation only.
B. American Society for Testing and Materials (ASTM):

ASTM C33	Standard Specification for Concrete Aggregates.
ASTM C150	Standard Specification for Portland Cement.
ASTM C494	Standard Specification for Chemical Admixtures for Concrete.
ASTM C618	Standard Specification for Coal Fly Ash and Raw or Calcined Natural Pozzolan for Use in Concrete.
ASTM C940	Method of Determination of Purity by Measurement of Freezing Points.
ASTM C1602	Standard Specification for Mixing Water Used in the Production of Hydraulic Cement Concrete.
ASTM D698	Standard Test Methods for Laboratory Compaction Characteristics of Soils Using Standard Effort (12,400 ft-lbf/ft3).
ASTM D4253	Standard Test Methods for Maximum Index Density and Unit Weight of Soils Using a Vibratory Table.
ASTM D4254	Standard Test Methods for Minimum Index Density and Unit Weight of Soils and Calculation of Relative Density.
ASTM D4318	Standard Test Methods for Liquid Limit, Plastic Limit and Plasticity Index of Soils.

ASTM D4832	Standard Test Method for Preparation and Testing of Controlled Low Strength Material (CLSM) Test Cylinders.
ASTM D6938	Standard Test Method for In-Place Density and Water Content of Soil and Soil-Aggregate by Nuclear Methods (Shallow Depth).

1.05 DEFINITIONS

A. Paved Areas – Areas for which the final surfacing will be traffic-bearing surface treatments such as street pavement, shoulders, driveways, parking lots, curbs, gutters, gravel roads or other surface treatments for traffic (pavers, etc…). Sidewalks and trails are excluded from the definition.
B. Unpaved Areas – Areas for which the final surfacing will not be a Paved Area.
C. Downtown Loop – The area of the city bounded on the north by Interstate 70, on the east by U.S. 71, on the south by Interstate 670 and on the west by Interstate 35.

1.06 INFORMATION PROVIDED BY THE CITY

A. As provided in the Contract Documents.

1.07 SUBMITTALS

A. Submit as specified in Section 01300 – Submittals.
B. Shop Drawings:
   1. Sheeting and Shoring Design – Contractor shall submit, in accordance with 29 CFR Past 1926 - OHSA Subpart P - Excavations and Trenches, a shoring design sealed by a registered professional engineer in the State of Missouri for all excavations greater than twenty (20) feet in depth prior to excavation. Submittal will be for informational purposes only.
C. Testing Reports:
   1. Laboratory testing results for proposed Borrow Materials.
   2. Laboratory testing results and quarry control reports for Granular Material.
   3. Laboratory testing results for and quarry control reports Granular Bedding.
   4. Laboratory testing results for compression testing of CLSM.
   5. Moisture-density (Proctor) test results.
   6. In-Place Density test results.
D. Other Submittals:
   1. Commercial Laboratory – submit name, contact information and certification of the commercial testing laboratory required by paragraph QUALITY ASSURANCE.
   2. Mix Design for CLSM.
   3. Concrete Plant – submit the name and location of the concrete plant which will provide the CLSM.

1.08 QUALITY ASSURANCE

A. The Contractor is responsible for the quality assurance and quality control of the Work.
B. Sampling and Testing:
   1. Tests to determine conformance with all requirements of this Specification and for the quality and properties of all Contractor provided materials, including borrow materials proposed for use. The aforementioned testing shall be performed by an independent, state-certified, commercial laboratory retained and compensated by the Contractor and approved by the City.

2. All work associated with QUALITY ASSURANCE shall be included in the Bid Price and will be incidental to the Work.

1.09 PRODUCT DELIVERY, STORAGE AND HANDLING

A. Stockpile materials in other areas or offsite when adjacent structures, easement limitations or other restrictions prohibit storage adjacent to the Work.
B. Offsite areas shall be arranged for by the Contractor in accordance with Section 01000 – General Project Requirements.
C. Granular fill and granular bedding material shall be stored so that it is protected from freezing and significant changes in moisture content.

PART 2 - PRODUCTS

2.01 MATERIALS ENCOUNTERED

A. Suitable Materials – As defined by, Section 02200 – Earthwork, paragraph MATERIALS ENCOUNTERED.
B. Unsuitable Materials – As defined by, Section 02200 – Earthwork, paragraph MATERIALS ENCOUNTERED.
C. Topsoil – As defined by, Section 02200 – Earthwork, paragraph MATERIALS ENCOUNTERED.
D. Rock – Unless otherwise specified in Section 01015 – Specific Project Requirements, all Materials encountered, regardless of type, character composition and condition shall be considered "unclassified" for the purpose of payment. Contractor shall determine the quantity of various materials to be excavated prior to submitting their Bid. Rock encountered shall be excavated at no extra cost to City.

2.02 WASTE MATERIALS

A. As defined by, Section 02200 – Earthwork, paragraph WASTE MATERIALS.

2.03 BORROW MATERIALS

A. As defined by, Section 02200 – Earthwork, paragraph BORROW MATERIALS.

2.04 GRANULAR BEDDING

A. Granular bedding for pipe bedding or embedment shall be clean crushed rock with not less than 95 percent passing a ½-inch sieve and not more than 5 percent passing a #No. 4 sieve. The gravel mixture shall contain no clay lumps or organic matter. The fraction passing the No. 4 sieve shall have a liquid limit not greater than 25 and a plasticity index not greater than 5 when tested in accordance with ASTM D4318.
B. Granular bedding material shall contain no cinders, clay lumps or other material which may cause pipe corrosion.

2.05 JOB EXCAVATED MATERIAL

A. Material excavated from the trench.
B. Meets the requirements of suitable material, except that it may include shale particles gravel or stone with any dimension up to 2 inches.

2.06 GRANULAR FILL MATERIAL

A. Granular Fill Material shall be as defined by, Section 02200 – Earthwork, paragraph GRANULAR FILL MATERIAL.

2.07 CONTROLLED LOW STRENGTH MATERIAL (CLSM)

A. Materials:
   1. Portland cement Type I or Type II conforming to ASTM C150.
   2. Fly ash conforming to ASTM C618 for Class C.
   3. Fine aggregate conforming to ASTM C33.
   4. Water, clean and potable conforming to ASTM C1602.
   5. Shrinkage compensation shall be proportioned in accordance with the manufacturer's recommendations and as tested by ASTM C940.
   6. Admixtures for air entrainment or for other purposes shall conform to ASTM C494 or other appropriate standards referenced by the manufacturer. Admixtures shall only be used when specified in the Contract Documents.

B. Mixture Design:
   1. Mix design for CSLM shall meet the requirements of Kansas City Public Works Department Specification Section 2600, except that the maximum compressive strength shall be from 50 to 125 psi and shall be removable without using a breaker and without damaging the utility.
   2. The unit weight of the CLSM shall be a maximum of 120 pounds per cubic foot.

C. Quality Control:
   1. CLSM material shall be provided from a City-approved concrete plant. Contractor shall submit name and location of plant to be used.
   2. One set of cylinders for compressive strength testing shall be obtained once per day or for every 100 cubic yards of flowable backfill placed.
   3. Cost for Quality Control shall be included in the Bid Price. No separate measurement or payment shall be made.

2.08 TOPSOIL

A. Topsoil shall be as defined by Section 02200 – Earthwork.

PART 3 - EXECUTION

3.01 DEMOLITION

A. Demolition shall be conducted in accordance with Section 02190 – Demolition.

B. Waste materials resulting from the cutting of pavement shall be considered demolition debris and disposed in accordance with Section 02190 – Demolition.

3.02 PAVEMENT REMOVAL AND RESTORATION

A. See additional requirements in Section 01000 – General Requirements, paragraph CUTTING AND PATCHING.

B. Public Right of Way:
   1. Kansas City, Missouri Public Works Department Standard Detail SR-1, Street Cut Restoration is hereby incorporated by reference.
   2. See Section 01015 – Specific Project Requirements for additional detail.

C. Other Pavement Cut and Restoration:
   1. Removal and replacement on private property shall be done in accordance with paragraph STREET CUT RESTORATION.
   2. Pavement removal shall be no larger than necessary to provide adequate working space for the proper installation of pipe and appurtenances.
   3. Pavement removal for connections to existing lines or structures shall not exceed the extent necessary for their installation.

4. Where the trench parallels the length of concrete walks and the trench location is all or partially under the walk, the entire walk shall be removed and replaced. Where the trench crosses drives, walks, curbs or other hard surfaces, the hard surfaces shall be removed and subsequently replaced between existing joints or between saw cuts as specified for pavement.

D. Driveways:
   1. Demolition and restoration of driveways will be as indicated in Section 01015 – Specific Project Requirements or as shown on the Drawings.

3.03 CLEARING AND GRUBBING

A. Perform clearing and grubbing as indicated or as necessary to perform excavation or trenching.
B. Clearing and grubbing shall conform to Section 02180 – Clearing and Grubbing.

3.04 STRIPPING

A. Stripping shall conform to the requirements of Section 02200 – Earthwork, paragraph STRIPPING.

3.05 GENERAL REQUIREMENTS FOR OPEN EXCAVATIONS

A. See Section 02200 – Earthwork for additional requirements on open excavations.

3.06 BLASTING

A. Blasting is prohibited unless approved by the City. If approved, Blasting shall conform to the requirements of Section 02200 – Earthwork, paragraph BLASTING.

3.07 DEWATERING

A. Dewatering of trench excavations shall conform to the requirements of Section 02200 – Earthwork, paragraph DEWATERING.

3.08 SHEETING AND SHORING

A. Sheeting and shoring for trench excavations shall conform to the requirements of Section 02200 – Earthwork and as specified herein.
B. Excavations shall provide adequate working space and clearances for the Work to be performed.
C. In no case shall excavation faces be undercut for extended footings. Trench sheeting shall be removed only if the pipe strength is sufficient to carry trench loads based on the trench width to the back of sheeting. Trench sheeting shall not be pulled until backfilling is completed.
D. With the written approval from the City, sheeting may be left permanently in the trench. Where trench sheeting is left in place, such sheeting shall not be braced against the pipe, but shall be supported in a manner which will preclude concentrated loads or horizontal thrusts on the pipe. Cross braces installed above the pipe to support sheeting may be removed after pipe embedment has been completed.

3.09 TRENCH EXCAVATION

A. Classification of Excavated Materials – No classification of excavated materials will be made. Excavation and trenching work shall include the removal and subsequent handling of all materials excavated or otherwise removed in performance of the work, regardless of the type, character, composition or condition.

B. No more trench shall be opened than is necessary to expedite the work. Except where tunneling is indicated on the Drawings, specified or permitted by the City, all trench excavation shall be open cut.

C. Alignment, Grade and Minimum Cover:
   1. The alignment, grade and elevation of each pipeline shall be as indicated on the Drawings.
   2. Trenches for waterlines shall be excavated to a depth sufficient to provide a minimum of 42 inches of pipe cover. Sixteen inch and larger diameter water lines shall be installed with a minimum of 60 inches of pipe cover.
   3. Greater pipe cover depths may be necessary on vertical curves or to provide necessary clearance for air release vaults, existing pipes, conduits, drains, drainage structures or other obstructions.

D. Limiting Trench Widths:
   1. Trenches shall be excavated to a width which will provide adequate working space and sidewall clearances for proper pipe installation, jointing and embedment. Minimum trench widths shall be as follows:

Table 1. Ductile Iron Pipe (DIP) and Polyvinyl Chloride (PVC) Pipe and High-Density Polyethylene Pipe (HDPE)

Pipe Size (inches)	Min. Trench Width in Earth (inches)	Max. Trench Width in Earth (inches)	Min. Trench Width in Rock (inches)
4	18	24	18
6	24	30	24
8	26	32	26
12	28	34	28
16	34	40	34
20	38	44	38
24	42	48	42
≥ 27	O.D. plus 24	O.D. plus 30	O.D. plus 24

O.D. = Outside Diameter

Table 2. Prestressed Concrete Cylinder Pipe (PCCP) and Reinforced Concrete Pipe (RCP)

Pipe Size (inches)	Min. Trench Width in Earth (inches)	Max. Trench Width in Earth (inches)	Min. Trench Width in Rock (inches)
16	36	44	36
20	40	50	40
24	44	56	48
≥ 27	2 * O.D.	(2 * O.D.) + 12	(2 * O.D.) – 12

O.D. = Outside Diameter

E. Mechanical Excavation:
   1. The use of mechanical equipment will not be permitted in locations where its operation would cause damage to trees, buildings, culverts, adjoining property, utilities or other structures above or below ground. In all such locations, hand excavating methods shall be used.
   2. Mechanical equipment used for trench excavation shall be of a type, design and construction and operated so that the rough trench excavation bottom elevation can be controlled and that trench alignment is such that pipe, when accurately laid to the specified alignment will be centered in the trench with adequate sidewall clearance. Undercutting the trench sidewall to obtain sidewall clearance is not permitted.
F. Excavation Below Pipe Subgrade – The trench bottom shall be over excavated below the proposed pipe, as indicated in 02250-1 and 02250-2 of this Section, to provide for the installation of granular embedment.
G. Foundations in Trenches:
   1. Whenever unsuitable or unstable soil conditions are encountered, trench subgrades shall be over-excavated until the trench subgrade is suitable as determined by the City/Design Professional.
   2. Adjustments may be made in the Contract Price in accordance with the provisions of the General Conditions.
H. Bell Holes:
   1. Bell holes shall provide adequate clearance for tools and methods used in installing pipe.
   2. No part of any bell or coupling shall be in contact with the trench bottom, trench walls or granular embedment when the pipe is jointed. Place embedment around the joint connection after joining the pipe.

3.10 TRENCH SUBGRADE

A. Subgrades for trench bottoms shall be firm, dense and thoroughly compacted and consolidated.
B. Protect and maintain the trench subgrade when natural suitable materials are encountered.
C. Remove rock fragments and materials disturbed during excavation and stripped from trench walls.
D. Subgrades shall be free from mud and muck and shall be sufficiently stable to remain firm and intact.

3.11 FOUNDATION

A. Description – A foundation is necessary when the native soils are unsuitable. For such a condition, the trench shall be over-excavated and a layer of supportive material shall be placed and compacted to provide a firm foundation for the subsequent pipe embedment material.
B. The Foundation layer is shown on 02250-1 and 02250-2.
C. Subgrades for trench bottoms which are otherwise solid, but which become mucky on top due to construction operations, shall be reinforced with trench stabilization material.
D. Material – If the trench foundation is an unsuitable foundation for the pipe, the Contractor shall submit a plan, to the City/Design Professional for review and approval, to include the proposed material to be used for the foundation.

E. Layer Thickness – Unsuitable material shall be over-excavated until the trench subgrade is suitable as determined by the City/Design Professional.

F. Bedding:

1. Description – A layer of supportive compacted material to provide even support of the pipe at the grade indicated on the Drawings.
2. The Bedding layer is shown on 02250-1 and 02250-2.
3. Material – Granular Bedding.
4. Layer Thickness:
   (a) A minimum of 3 inches below the pipe or pipe bell when the pipe is placed on a foundation or suitable material.
   (b) A minimum of 6 inches below the pipe or pipe bell when the pipe is placed on rock.

3.12 HAUNCHING

A. Description – Extends from the bottom of the pipe to the spring line of the pipe. Haunching provides the most resistance to pipe deflection.

B. The Haunching layer is shown on 02250-1 and 02250-2.

C. Material – Granular Bedding.

D. Layer Thickness – One half the outside diameter of the pipe or pipe bell.

3.13 INITIAL BACKFILL

A. Description – Extends from the spring line of the pipe to a point above the top of the pipe.

B. Bedding Material:
   (a) Class A Bedding – Granular Bedding.

3.14 FINAL BACKFILL

A. Description – The zone from the top of the Initial Backfill to the bottom of final surfacing.

B. The Haunching layer is shown on 02250-1 and 02250-2.

C. Material:

1. Paved Areas within the Downtown Loop – For areas where the final surfacing is a paved area, the final backfill shall be Controlled Low Strength Material (CLSM).
2. Paved Areas – For areas where the final surfacing is a paved area, the final backfill shall be Granular Fill Material. CLSM may be substituted for Granular Fill Material as approved by the City or as indicated in the Contract Documents.
3. Unpaved Areas:
   (a) For areas where the final surfacing is an unpaved area, the final backfill material shall be a suitable material.
   (b) Where the pipe cover is 8 feet or more, job excavated material may be used as backfill if the following requirements are met:
      (i) The final surfacing is unpaved.
      (ii) The minimum clearance from the top of the initial backfill is 36 inches or 42 inches from the top of the pipe.
      (iii) The job excavated material shall not be placed within 18 inches of the finished grade.

D. Layer Thickness – Varies with pipe depth.

3.15 EMBEDMENT

A. Class A Embedment shall be used for all pipes.

3.16 BACKFILL PLACEMENT

A. Granular Bedding and Granular Fill Material shall be placed in lifts not exceeding 12 inches in loose thickness.
B. Suitable Material shall be placed in lifts not exceeding 12 inches in loose thickness.
C. Bedding – Bedding Granular bedding material shall be spread and the surface graded to provide a uniform and continuous support beneath the pipe at all points between bell holes or pipe joints. It is permissible to slightly disturb the finished subgrade surface by the withdrawal of the pipe sling or other lifting tackle.
D. Haunches:
   1. After each pipe has been graded, aligned and placed in final position on the bedding material and shoved home, sufficient pipe embedment material shall be deposited and compacted by shovel slicing or chalking under the pipe haunches on each side of the pipe and back of the bell or end thereof to hold the pipe in proper position and alignment during subsequent pipe jointing and embedment operations.
   2. Care shall be taken to protect protective pipe coatings or wraps. If coating or wrapping is damaged, then the Contractor shall repair or replace the coating to the satisfaction of the City at no additional cost to the City.
   3. Haunching and initial backfill material shall be deposited uniformly and simultaneously on each side of the pipe to prevent lateral displacement.
E. Weather Limitations – Backfilling of trenches during freezing weather shall not be done except by permission of the City. No backfill materials shall be installed on frozen surfaces, nor shall froze materials, snow or ice be placed in the trench.
F. Pipe Encasements – A layer of backfill material not more than 8 inches deep may be placed over concrete arch encasement or concrete reaction blocking after the concrete has reached its initial set, to aid curing. No additional backfill shall be placed over arch encasement or blocking until the concrete has been in place for at least 3 days.
G. Use of Geotextile Material:
   1. Where indicated on the Drawings, migration of soil into the embedment material shall be prevented with geotextile fabric.
   2. Geotextile material shall conform to Section 02230 – Geotextiles, paragraph GEOTEXTILES on Subsurface Drainage, unless otherwise indicated on the Drawings or in Section 01015 – Specific Project Requirements.
   3. Geotextile shall be placed on the trench surfaces so that it completely surrounds the embedment material. Joints shall be lapped 12 inches.

3.17 COMPACTION

A. Granular Bedding – Vibratory compactors and shovel slicing under the haunches of the pipe.
B. Granular Fill Material – The material in each layer shall be wetted or dried as required and thoroughly mixed to ensure uniform moisture content. Each layer shall be thoroughly compacted, utilizing a vibratory compactor, to achieve the minimum allowable density of 95% of the maximum dry density (at moisture content range from 3% below optimum to 2% above optimum as determined by ASTM D698). If the granular fill material fails to meet the minimum 95% density specified, the material shall be removed and compacted to achieve 95% or greater.
C. CLSM – Not applicable.

D. Suitable Material:
   1. Cohesive Materials – As required to obtain 95% maximum dry density in accordance with ASTM D698 with a moisture content range from 3% below optimum to 2% above optimum.
   2. Cohesion-less Materials – As required to obtain not less than 85% relative density as determined by ASTM D4253 and ASTM D4254.
E. Job Excavated Material – Where job excavated material is used for trench backfill, the Contractor shall use compaction methods to ensure that settlement does not occur within the limits of trench excavation. The Contractor shall repair settlement as directed by the City at any time during the Work or at any time during the warranty period. Repairs shall be made at no additional cost to the City.

3.18 FINAL SURFACING

A. Final surfacing shall be indicated on the Drawings.
B. For unpaved areas, see Section 02200 – Earthwork, paragraph FINAL GRADING AND PLACEMENT OF TOPSOIL.

3.19 DITCH CHECK

A. Continuity of embedment material shall be interrupted by low permeability groundwater barriers to impede passage of groundwater through the embedment.
B. Materials:
   1. Unpaved Areas – Suitable material classified as GC, SC, CL or ML-CL as defined in Section 02200 – Earthwork, paragraph MATERIAL ENCOUNTERED. Barriers shall be compacted to 95% maximum dry density in accordance with ASTM D698 with a moisture content range from 3% below optimum to 2% above optimum.
   2. Paved Areas – CLSM.
C. Barriers shall be constructed the full depth of the trench and shall include the foundation, bedding, haunching, initial backfill and final backfill zones of the trench.
D. Barriers shall be the full width of the trench excavation and 3 to 5 feet in length measured along the pipe.
E. Barriers shall be placed in the trench at intervals as shown on the Drawings or as directed by City/Design Professional. Unless otherwise specified by the City/Design Professional or specified in Section 01015 – Specific Project Requirements, the spacing of the groundwater barriers shall not exceed 250 feet.
F. The installed location of all groundwater barriers shall be noted on the Field Mark-Up Drawing and Construction Record Drawing.
G. Construction of the groundwater barriers shall be incidental to trenching and backfilling. No separate measurement or payment will be made.

3.20 SPECIAL REQUIREMENTS

A. For trench excavation within paved areas that required full depth and width pavement replacement, refer to additional instruction in Section 01015 – Specific Project Requirements.
B. Suitable materials shall be approved by the City/Design Professional prior to backfill.
C. Granular Fill Material may be used for final backfill in unpaved areas to within 18 inches of the final graded surface at the option of the Contractor.

3.21 DRAINAGE MAINTENANCE

A. To the greatest extent practical, open trench excavations shall be protected from surface water. The Contractor shall conduct the Work in a manner that diverts surface water away from the open excavation.
B. Trenches across roadways, driveways, walks or other trafficways adjacent to drainage ditches or watercourses shall not be backfilled prior to completion of backfilling the trench on the upstream side of the trafficway to prevent impounding water after the pipe has been laid.
C. Bridges and other temporary structures required to maintain traffic across such unfilled trenches shall be constructed and maintained by the Contractor.
D. Backfilling shall be done so that water will not accumulate in unfilled or partially filled trenches.
E. All material deposited in roadway ditches or other water courses crossed by the line of trench shall be removed immediately after backfilling is completed; and the original cross section, grade and contour of the ditches or watercourses shall be restored.
F. Surface drainage shall not be obstructed longer than necessary.
G. If the trench subgrade becomes unsuitable or unstable after the trench is excavated and as a result of the Contractor's inability to meet the requirements for DRAINAGE MAINTENANCE, then the Contractor shall over-excavate the unsuitable material and construct a foundation to the satisfaction of the City/Design Professional and at no additional cost to the City.

3.22 FIELD QUALITY CONTROL

A. Compaction Tests:
   1. All tests shall conform to ASTM D6938. All tests required shall be made by an approved independent testing laboratory.
   2. Two initial gradation tests shall be made for each type of embedment, fill and backfill material.
   3. Storm and Sanitary Sewer Installations:
      (a) Unless otherwise specified in Section 1015 – Specific Project Requirements, the minimum frequency of in-place compaction testing including density and moisture content will be as follows:
         (i) Compaction testing is required for all trench zones where suitable material or granular fill material is placed.
         (ii) Compaction testing is not required for granular bedding material or zones of random fill.
         (iii) One compaction test shall be done every 100 feet of trench length under pavement and for every three vertical feet of backfill lifts placed. A minimum of two sets of tests are required for each trench backfilled regardless of length.
         (iv) One compaction test will be done for every 300 feet of trench length in unpaved areas and for every three vertical feet of backfill lifts placed. A minimum of two sets of tests are required for each trench backfilled regardless of length.
         (v) As required when the City/Design Professional suspects the quality of moisture control or effectiveness of compaction.
   4. Water Mains and Service Lines:
      (a) Unless otherwise specified in Section 01015 – Specific Project Requirements, the Contractor shall conduct a minimum of ten (10) in-place

compaction tests at various locations throughout the project area as designated by the City/Design Professional.

5. Backfill that fails to meet required densities shall be removed and compacted as necessary to achieve specified results at no additional cost to the City.

B. Controlled Low-Strength Material (CLSM) Tests:
   1. Determine unconfined compressive strength using cylinders of CLSM sampled, handled, cured and tested in accordance with ASTM D4832. All tests required shall be made by an acceptable independent testing laboratory at the expense of the Contractor.
   2. The minimum frequency of compressive strength testing will be one set of cylinders obtained once per day or for every 100 cubic yards of flowable backfill placed.

C. Field Quality Control shall be considered incidental to the Work associated with trenching, backfill and compaction. The Contractor shall include all costs in the Bid Price and no separate measurement or payment shall be made.

3.23 DISPOSAL OF EXCESS EXCAVATED MATERIALS

A. Except as otherwise permitted in Section 01015 – Specific Project Requirements, all excess excavated materials shall be hauled off and disposed of off-Site by the Contractor.

B. The disposal of waste and excess excavated materials, including hauling, handling, grading and surfacing shall be incidental to the work associated with trenching, backfill and compaction. No separate measurement or payment shall be made.

3.24 SEEDING AND SODDING

A. All areas disturbed by the Contractor's operations shall be seeded or sodded according the requirements of Section 02930 – Seeding or Section 02931 – Sodding.

3.25 SETTLEMENT

A. The Contractor is solely responsible for all settlement of backfills, fills and embankments which may occur within the correction period as stipulated in the General Conditions and Supplementary Conditions. The Contractor shall make or cause to be made, all repairs, replacements and restoration associated with settlement within 30 days after receipt of notice from the City.

Drawings 02250-1 and 02250-2 on the following 2 pages.

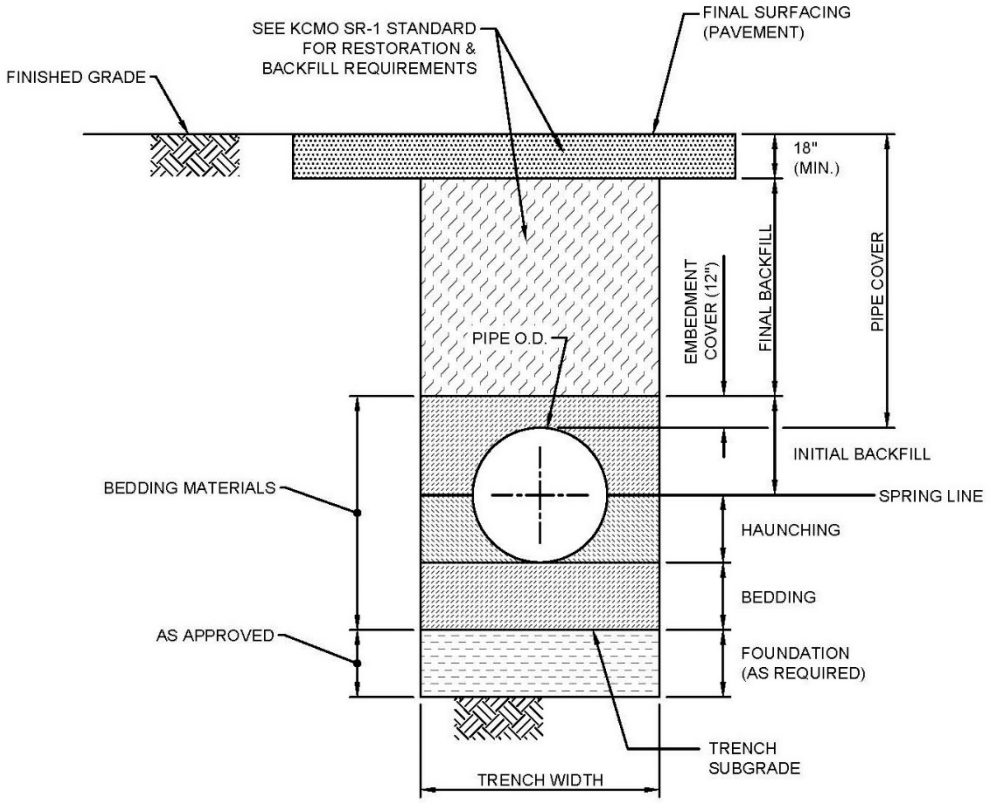

TRENCH DETAIL, CLASS A BEDDING, PAVED AREAS

WATER SERVICES
CITY OF KANSAS CITY, MISSOURI

DRAWING NO. 02250-1

DEVELOPED BY: TECHNICAL ADVISORY COMMITTEE

APPROVED BY:

DATE: 09/16/2021

1 OF 1

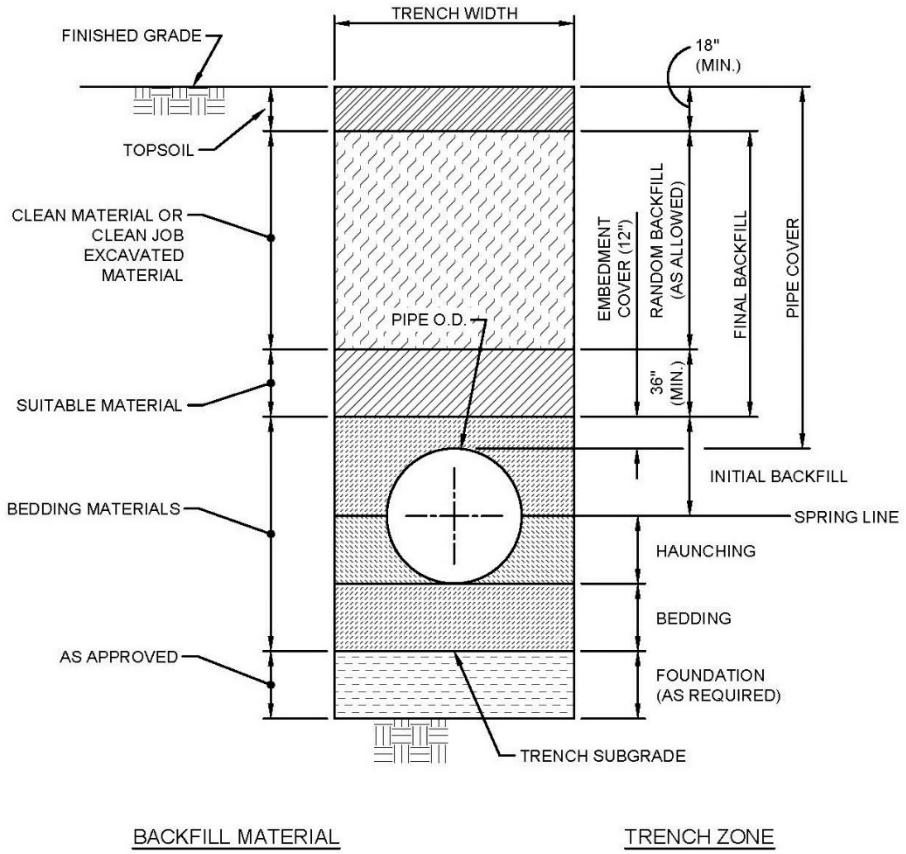

TRENCH DETAIL, CLASS A BEDDING, UNPAVED AREAS

WATER SERVICES
CITY OF KANSAS CITY, MISSOURI

DRAWING NO. 02250-2

DEVELOPED BY: TECHNICAL ADVISORY COMMITTEE

APPROVED BY:

DATE: 09/13/2021

1 OF 1

END OF SECTION

SECTION 02273 – RIPRAP

PART 1 - GENERAL

1.01 SUMMARY

A. This section covers the furnishing of all labor, materials and equipment for the placing of riprap at the locations and to the lines and grades shown on the drawings. This section is suitable for the following applications:
   1. Ditch lining.
   2. Culvert aprons.
   3. Streambank stabilization.
   4. Erosion control measures.

1.02 SPECIFICATION MODIFICATIONS

A. It is understood that throughout this section these Specifications may be modified by appropriate items in Section 01015 – Specific Project Requirements, or as otherwise indicated on the Contract Drawings.

1.03 RELATED SECTIONS

A. Section 01015 – Specific Project Requirements.
B. Section 01570 – Temporary Erosion and Sediment Control.
C. Section 02180 – Clearing and Grubbing.
D. Section 02200 – Earthwork.
E. Section 02230 – Geotextiles.
F. Section 03000 – Miscellaneous Concrete.

1.04 CODES AND STANDARDS

A. The publications listed below form a part of this specification to the extent referenced. The publications are referred to within the text by the basic designation only.
B. American Association of State Highway and Transportation Officials (AASHTO):

AASHTO M288	Standard Specification for Geotextile Specification for Highway Applications.

C. American Society for Testing and Materials (ASTM):

ASTM C33	Standard Specification for Concrete Aggregate.
ASTM D75	Standard Practice for Sampling Aggregates.
ASTM C88	Soundness of Aggregates by Use of Sodium Sulfate or Magnesium Sulfate.
ASTM C127	Standard Test Method for Density, Relative Density (Specific Gravity), and Absorption of Coarse Aggregate
ASTM C136	Standard Test Method for Sieve Analysis of Fine and Course Aggregate.
ASTM D1682	Standard Test for Breaking Load and Elongation of Textile Fabrics.
ASTM D4992	Evaluation of Rock to be Used for Erosion Control
ASTM D5312	Evaluation of Durability of Rock for Erosion Control Under Freezing and Thawing Conditions
ASTM D5313	Evaluation of Durability of Rock for Erosion Control Under Freezing and Thawing Conditions

ASTM D5519 Particle Size Analysis of Natural and Man-Made Riprap Materials.

1.05 SUBMITTALS

A. Submit as specified in Section 01300 – Submittals.

B. Certified test reports, indicating compliance with the requirements of these specifications, must be received and approved by the City prior to the delivery of any materials to the site.

C. Test Reports:

1. Contractor shall submit certified test reports from a qualified independent testing laboratory, selected and compensated by Contractor. Selection of the independent testing laboratory shall be subject to the City's approval. No materials shall be used until approval of the designated source is obtained. The approval of a source shall not be construed as approval of all materials from that source. Material from certain areas, strata, or channels within the approved source may be rejected. The acceptability of the stone is subject to final approval by the City.
2. Soundness Tests: Soundness of parent material for riprap shall be tested in accordance with ASTM C88.
3. Riprap Gradation: Gradation of riprap (determined from a sample size of not less than 1-1/2 cubic yards) shall be done in accordance with ASTM C136 and D75.
4. Riprap Bedding Gradation: Gradation of bedding materials shall be done in accordance with ASTM C136 and D75.

D. Certificates:

1. Quarry Information: Riprap shall be obtained from a quarry and ledge approved by the Missouri Department of Transportation or the U.S. Army Corps of Engineers, Kansas City District. Contractor shall submit information on the quarry from which the riprap will be obtained. The geologic unit that is the source of the riprap must be pre-approved by a Geologist, registered in the State of Missouri, selected and compensated by the Contractor. The source and the materials proposed for use shall be acceptable to the City before riprap operations are started.
2. Geotextile: Furnish manufacturer's certification for each lot of material furnished stating the name of the manufacturer, the chemical composition of the filaments or yarns and certifying that the material supplied is in accordance with this specification. The certification shall include or have attached typical results of test from specific lots for all specified requirements.

1.06 QUALITY ASSURANCE

A. The Contractor is responsible for the quality assurance and quality control of the Work.

B. Experience: All riprap work shall be performed by a contractor having demonstrated experience in riprap placement on projects of similar size. The work shall be prepared by experienced personnel who are familiar with the required work and who are under the supervision of a qualified foreman at all times when the work is in progress. The contractor shall have access to all equipment necessary to perform the work.

C. As an additional measure of quality control, the City may request to conduct a visual inspection of the quarry ledge and/or stockpiles prior to delivery of the material to the

Site. If such an inspection is requested, the Contractor shall make arrangements with the quarry and participate in the inspection.

D. Curing Time: Stone shall be cured for a minimum of 30 calendar days before being shipped to the project site to allow freshly quarried stone to cure. City can waive requirement if the stone has characteristics that make curing unnecessary. Conduct curing operations on freshly quarried stone to allow it to release stored energy and moisture and to allow the stone to demonstrate that it will not fracture during the energy release and drying-out phase.

E. Quarrying Exclusion Period: Stone quarried between the 15th of October and the 15th of April will not be approved for use in the project. If the stone is not affected by freeze-thaw cycles, and the durability history of the stone demonstrates that quarrying during the exclusion period has no adverse effect on the durability of the stone and the City approves the use of the stone quarried during the exclusion period, the stone quarrying period exclusion may be waived by the City.

PART 2 - PRODUCTS

2.01 RIPRAP

A. Stone for riprap shall be sound, hard, and durable rock, free from cracks, seams, shale partings and overburden spoil.

B. Stone shall be approximately rectangular in cross section, free from thin, slab-like pieces. Flat or elongated stones having a small dimension less than 1/3 of the large dimension shall not be used.

C. The quantity of stone having an elongation ratio greater than 3:1 shall not exceed 20 percent by weight.

D. Deleterious substances such as shale and clay balls (in material retained on the ½-inch sieve) shall not exceed 7 percent by weight.

E. The minimum weight of stone shall be 160 pounds per cubic foot as computed by multiplying the specific gravity (bulk-saturated surface dry basis) determined in accordance with ASTM D127 times 62.3 pounds per cubic foot.

F. Stone maximum loss not more than 10% on stone when subjected to freezing and thawing or wetting and drying shall be in accordance with ASTM D5312 and D5313, respectively.

G. Not more than 10% of the stone shall show splitting, crumbling, or spalling when subjected to 5 cycles of the sodium soundness test as required by ASTM C88.

H. Perform gradation tests to assure compliance with contract requirements in accordance with ASTM D5519, Test Method A.

I. Gradation type shall be as called out on the Drawings. Unless otherwise indicated in Section 01015 – Specific Project Requirements, stone shall be reasonably uniformly graded as shown in Table 1 on the following page.

Table 1. Riprap Gradation and Placement Information

Criterion	Light 12*	Light 18*	Light 24	1/4 Ton	1/2 Ton	1 Ton**
Maximum Stone Size (D_{100}), lbs.	85	300	600	2500	3500	8000
Predominant Stone Size (D_{50}), lbs.	25	85	200	500	1000	2000
No More than 15% Passing Stone Size, lbs.	5	20	40	150	250	500
Minimum Course Thickness, inches	12	18	27	36	48	54
Minimum Riprap Bedding Course Thickness, inches	6	6	6	6	9	9
Placement Tolerance, inches	3	3	6	6	6	6

* Riprap types only for use in approved ditch liner and erosion control application.
** Geotextile fabric will not be allowed as a filter for these riprap types

2.02 RIPRAP BEDDING

A. Bedding for the riprap shall be furnished prior to placement of the riprap as specified herein.
B. Bedding shall be sound, durable limestone particles, free from cracks, seams, shale partings and soil. It shall be a natural gravel composed of hard, tough and durable particles free from adherent coatings. Bedding larger than one-inch standard sieve size shall be reasonably free from flat elongated particles.
C. Bedding material shall meet the quality requirements of ASTM C33 and shall be reasonably well graded within the limits specified:

Table 2. Riprap Bedding Material Gradation Limits

Sieve Size	Percent Passing by Weight
3 inch	Maximum Allowable Size
1-1/2 inch	75% - 95%
1/2 inch	40% - 60%
No. 4	5% - 25%

D. Contractor shall perform gradation tests to assure compliance with contract requirements and shall maintain detailed records. The bedding material shall be sampled in accordance with ASTM D75 and tested in accordance with ASTM C136.

2.03 GEOTEXTILE

A. Unless otherwise indicated on the Drawings, geotextile material shall be installed below the bedding material to increase soil stabilization. See also Section 02230 – Geotextiles.
B. Filter fabric shall be woven or nonwoven, polyester or polypropylene material that comply with the general physical and the geotextile property requirements for subsurface drainage, separation, and stabilization in AASHTO M 288.
   1. The minimum permittivity shall be 1.0 sec-1.
   2. The material shall be AASHTO Class 1.
C. Store and handle geotextiles according to ASTM D 4873. Do not use torn or punctured geotextiles.

PART 3 - EXECUTION

3.01 SITE PREPARATION

A. Clear and grub areas, dispose of large trees, brush and vegetation before starting construction. This work shall be done in accordance with Section 02180 – Clearing and Grubbing.
B. Remove tree stumps and roots larger than 1 ½ inches in diameter.
C. Backfill all excavations resulting from the clearing and grubbing operations with suitable materials in accordance with Section 02200 – Earthwork.
D. The contractor shall arrange for and dispose of large debris off the site.
E. Install temporary erosion control measures where shown on the drawings. Erosion control work shall be done in accordance with Section 01570 – Temporary Erosion and Sediment Control.

3.02 BASE PREPARATION

A. Areas on which riprap is to be placed shall be graded and/or dressed to conform to the contract drawings within an allowable tolerance of plus 2 inches and minus 4 inches from the theoretical lines and grades.
B. Where such areas are below the allowable minus tolerance limit they shall be brought to grade by fill with earth similar to the adjacent material and then compacted to a density equal to the adjacent in place material.
C. As an alternative, these areas may be filled with riprap bedding material at no additional cost. Immediately prior to placing the geotextile or riprap bedding material, the prepared base will be inspected by the City/Design Professional and no material shall be placed thereon until that area has been approved.
D. The City/Design Professional will inspect all subgrade material to determine conformance with indicated lines and grades.

3.03 GEOTEXTILE

A. Geotextile shall be placed on the base and below the riprap bedding. See also Section 02230 – Geotextiles.
B. Filter fabric joints shall be lapped in accordance with the manufacturer's installation instructions, but not less than least 3 feet.
C. A minimum 2 percent slack shall be provided in both directions.
D. Fabric shall be installed in conformity with all other manufacturer's requirements.

3.04 RIPRAP BEDDING

A. Bedding shall be spread uniformly to the minimum riprap bedding course thickness as indicated in Table 1, as modified in Section 01015 – Specific Project Conditions or as indicated on the Drawings.
B. Bedding shall be placed using methods which will avoid damage to the prepared base and geotextile.
C. Bedding shall be placed using methods that minimize segregation.
D. Any damage to the underlying surface during placement of the bedding shall be repaired before proceeding with the Work.
E. Compaction of the bedding layer will not be required. However, the bedding surface shall be reasonably smooth.

3.05 RIPRAP

A. Stone for riprap shall be placed in a manner that will produce a well-graded mass of rock. Rock riprap shall not be placed on slopes steeper than 1.5H:1V.
B. Riprap shall be placed uniformly to the minimum course thickness indicated in Table 1, as modified in Section 01015 – Specific Project Conditions or as indicated on the Drawings.
C. Riprap shall be placed to its full course thickness in one operation and in such a manner as to avoid displacing the riprap bedding material or damaging the geotextile.
D. Placement shall begin at the bottom of the area to be covered and continue up the slope. Subsequent loads of material shall be placed against previously placed material in such a manner as to ensure a relatively homogenous mass.
E. The finished riprap shall be free from objectionable pockets of small stones and clusters of larger stones.
F. Riprap shall be placed to the lines and grades indicated on the Drawings. The placement tolerance for the finished surface shall be as indicated in Table 1. The placement tolerance is in addition to the specified course thickness.
G. Desired distribution shall be obtained by selective loading at the quarry; by controlled dumping of successive loads during final placing; or by other methods of placement which will produce the specified results.
H. Placing riprap in layer, hauling over riprap after placement will not be permitted. Placing riprap by dumping it at the top of the slope and pushing it down the slope shall not be permitted. Moving stone by drifting and manipulating stone by means of dozers or other blade equipment is not permitted.
I. No equipment shall be operated on the completed stone protection system.
J. Rearranging of individual stones shall be required to the extent necessary to obtain a well-graded distribution of stone sizes as specified above. However, manipulating stone by means of dozers or other blade equipment is not permitted.

3.06 MAINTENANCE

A. The Contractor shall maintain the riprap until the end of the performance and maintenance period. Any riprap or material that is deteriorated, disintegrated or displaced by any cause shall be repaired to the lines and grades shown on the drawings.

END OF SECTION

SECTION 02320 – UTILITY CASINGS

PART 1 - GENERAL

1.01 SUMMARY

A. This section provides the general requirements for the installation of casing pipe at the locations shown on the drawings. This section includes the following:
   1. Steel Casing Pipe.
   2. Reinforced Concrete Pipe (RCP) Casing Pipe.
   3. Fiberglass Reinforced Pipe (FRP) Casing Pipe.
   4. Polyvinyl Chloride (PVC) Casing Pipe.
   5. Casing Spacers and Casing End Seals.

B. Casings to protect water mains from potential contamination from Non-Potable Fluid Lines and Structures shall comply with Section 01016 – Water Mains near Sewers.

1.02 SPECIFICATION MODIFICATIONS

A. It is understood that throughout this section these Specifications may be modified by appropriate items in Section 01015 – Specific Project Requirements, or as otherwise indicated on the Contract Drawings.

1.03 RELATED SECTIONS

A. Section 01000 – General Project Requirements.
B. Section 01015 – Specific Project Requirements.
C. Section 01300 – Submittals.
D. Section 02200 – Earthwork.
E. Section 02250 – Trenching, Pipe Embedment and Backfill.
F. Section 02618 – Ductile Iron Pipe for Water Mains.

1.04 CODES AND STANDARDS

A. The publications listed below form a part of this specification to the extent referenced. The publications are referred to within the text by the basic designation only.

B. American Society for Testing and Materials (ASTM):

ASTM A36	Standard Specification for Carbon Structural Steel
ASTM A1011	Standard Specification for Steel, Sheet and Strip, Hot-Rolled, Carbon, Structural, High-Strength Low-Alloy, High-Strength Low-Alloy with Improved Formability, and Ultra-High Strength
ASTM C33	Standard Specifications for Concrete Aggregates
ASTM C361	Standard Specification for Reinforced Concrete Low-Head Pressure Pipe
ASTM C76	Standard Specifications for Reinforced Concrete Culvert, Storm Drain, and Sewer Pipe
ASTM D2412	Standard Test Method for Determination of External Loading Characteristics of Plastic Pipe by Parallel-Plate Loading

C. American Petroleum Institute (API):

API RP 1102	Steel Pipeline Crossing Railroads and Highways

API 1104 Standard for Welding Pipelines and Related Facilities

D. American Water Works Associations (AWWA):
   - AWWA C200 Steel Water Pipe 6 Inches and Larger
   - AWWA C206 Field Welding of Steel Water Pipe
   - AWWA C900 Polyvinylchloride Pipe
   - AWWA C-905 Polyvinylchloride pipe

E. Steel Structure Painting Council (SSPC):
   - SSPC SP3 Surface Preparation Specification 3, Power Tool Cleaning

1.05 DEFINITIONS

A. Not used.

1.06 INFORMATION PROVIDED BY THE CITY

A. As provided in the contract documents.

1.07 SUBMITTALS

A. Submit as specified in Section 01300 – Submittals

B. Shop Drawings:
   1. When requested by the City or Design Professional.

C. Product Data:
   1. Submit descriptive and engineering data for:
      (a) Casing pipe material.
      (b) Casing pipe coatings and linings.
      (c) Pipe alignment skids.
      (d) Guide spacer bands.
      (e) Casing spacers.
      (f) Casing end seals.
      (g) Polyethylene encasement.

D. Other Submittals:
   1. Manufacturer's design calculations for casing spacer service load.
   2. Minimum design and installation requirements for the highway department, railroad, or organization having jurisdiction.

1.08 QUALITY ASSURANCE

A. The Contractor is responsible for the quality assurance and quality control of the Work.

B. Accepting casing pipe on site: inspect for damage and store (see paragraph 1.09).

C. Contractor: The contractor specializing in the installation of the products specified in this Section shall have a minimum of three years of documented experience.

1.09 PRODUCT DELIVERY, STORAGE AND HANDLING

A. Follow the provisions for the delivery, storage and handling of products to and at the site as provided in Section 01000 – General Project Requirements.

PART 2 - PRODUCTS

2.01 STEEL PIPE

A. Pipe: Pipe shall be smooth-walled, welded steel pipe fabricated conforming to ASTM A36 plate or ASTM A1011 sheet with a minimum yield point of 248 MPa (36,000 psi), conforming to AWWA C200.

B. Wall Thickness: Unless otherwise indicated on the Drawings or in Section 01015 – Specific Project Requirements, Table 1 provides a listing of minimum casing diameters and thicknesses:

Table 1. Minimum Casing Dimensions

Encased Pipe Diameter (inches)	**Minimum Casing Diameter** (inches) (1)	**Wall Thickness** (inches)	
		Under Highways	**Under Railroads**
6	18	0.250	0.312
8	18	0.250	0.312
12	24	0.281	0.375
16	30	0.312	0.438
20	36	0.344	0.563
24	42	0.375	0.625
30	44	0.375	0.625
36	48	0.375	0.625

1. Inside Diameter: The inside diameter of the casing pipe shall exceed the outside diameter of the carrier pipe joints or couplings by a minimum of 4 inches.

C. Joints: All joints in steel pipe casings shall be field welded to conform to API 1104 or AWWA C206.

D. Cleaning:
1. Clean pipe to SSPC-SP3 and apply iron oxide field coating to all exterior joints after field welding.
2. Clean to SSPC-SP3 and apply iron oxide field coating to all interior joints on 24-inch diameter casings and larger after field welding.

E. Factory Coatings and Linings:
1. Unless otherwise specified on the Drawings or in Section 01015 – Specific Project Requirements, the exterior and interior of all casing pipe shall be coated with iron oxide primer applied at 33 microns (1.5 mils) minimum thickness.
2. Hold coatings and linings back from end joints to be welded at least 2 inches each side of joint.

2.02 REINFORCED CONCRETE PIPE (RCP)

A. Pipe: ASTM C76 circular pipe and shall be the class and length specified on the Drawings. Pipe shall be a minimum Class IV.

B. Joints: Steel end joints with a groove in the spigot end for an O-ring gasket.

C. Gasket: Synthetic Rubber, ASTM C361.

2.03 FIBERGLASS REINFORCED PIPE (FRP)

A. Pipe to be manufactured by the centrifugal casting process to result in a dense, nonporous, corrosion-resistant, consistent composite structure conforming to ASTM D3262, ASTM D 4161, and ASTM D2412.
B. Joints:
   1. Unless otherwise specified, the pipe shall be field connected with fiberglass sleeve couplings that utilize elastomeric sealing gaskets made of EPDM rubber compound as the sole means to maintain joint water tightness.
   2. The joints must meet the performance requirements of ASTM D4161.
C. Diameter: The actual outside diameter and the minimum wall thickness of the pipes shall be in accordance with ASTM D3262.
D. Pipe Length: Pipe shall be supplied in nominal lengths of 20 feet.
E. Minimum Pipe stiffness of 36 psi when tested in accordance with ASTM D2412.

2.04 POLYVINYL CHLORIDE (PVC) PIPE

A. Pipe: PVC pipe shall conform to AWWA C-900 or AWWA C-905.
B. PVC pipe used for encasement shall only be used for the protection of the carrier when installed near a gas main. See paragraph WATER MAINS NEAR GAS MAINS.

2.05 CASING SPACERS

A. Casing spacers shall be used to install the carrier pipe inside the casing pipe. Casing spacers shall fasten tightly onto the carrier pipe so that when the carrier pipe is being installed the spacers will not move along the pipeline.
B. Casing spacers shall be designed by the Manufacturer to adequately support and electrically isolate the carrier pipe within the casing pipe under all conditions.
C. Casing spacers shall be doubled on each end of the casing pipe.
D. Each casing spacer shall be capable of providing support for the carrier pipe in service at a maximum spacing of 10 feet. Calculations prepared by the manufacturer shall be submitted in accordance with paragraph SUBMITTALS showing that the casing spacer will support the service load at the recommended spacing, including a factor of safety of two (2).
E. Casing spacers used under this specification shall meet or exceed the specifications described herein as projection-type that has a minimum of projections around the circumference totaling the number of diameter inches.
F. Projection-type casing spacers panels, risers and fasteners shall be constructed of Stainless Steel type 304. Casing spacer skids shall be constructed of UHMV Polyethylene.
G. Allowable manufacturers and model (or City approved equal):
   1. Cascade Waterworks Manufacturing, Model CCS.
   2. Power Seal, Model 4810.

2.06 CASING END SEALS

A. Casing shall be fitted with end seals at both ends to reduce the intrusion of water and fines from the surrounding soils. The seal shall be formed with a flexible material that will inhibit the formation of a waterway through the casing.
B. Allowable manufacturers and model (or City approved equal):
   1. Cascade Waterworks Manufacturing, Model CCES.
   2. Power Seal, Model 4810ES.

2.07 POLYETHYLENE ENCASEMENT

A. Polyethylene encasement shall conform to Section 02618 – Ductile Iron Pipe for Water Mains, paragraph 2.08 POLYETHYLENE ENCASEMENT.

2.08 CATHODIC PROTECTION

A. Cathodic protection for either the casing pipe and/or carrier pipe shall be as indicated on the Drawings and/or in the Contract Documents.

PART 3 - EXECUTION

3.01 TRENCHING, EXCAVATION, BACKFILL AND COMPACTION

A. Comply with Section 02200 – Earthwork and Section 02250 – Trenching, Pipe Embedment and Backfill.

3.02 CASING INSTALLATION

A. Casing pipe material, diameter, and wall thickness to be used shall be indicated on the Drawings.
B. Casings shall be installed as specified herein and in accordance with drawing 02320-1.
C. All work shall meet the minimum requirements of API RP1102, and the highway, railroad, or utility having jurisdiction. Installation shall be subject to their inspection and approval.
D. Install Casing Pipes:
   1. Boring: Continuous flight auger, pneumatic or hydraulic jacking, or method approved by City. Reinforce leading end of casing with jacking band.
   2. Install to line and grade indicated on the Drawings within 1% tolerance
   3. Excavate working pits of adequate size to provide safe working conditions and in such a manner as not to disrupt traffic or damage the roadway grade or surface.
   4. Casings rejected due to misalignment or other failures shall be abandoned in place and filled with controlled low strength material (CLSM) as specified in 02200 – Earthwork and Section 02250 – Trenching, Pipe Embedment and Backfill.
   5. Casing pipe installed by trenchless methods that are misaligned or rejected shall not be recovered for reuse.

3.03 CASING SPACERS

A. Casing spacers shall be used for all carrier pipe being installed in a casing.
B. Furnish casing spacers for pipe alignment guides as indicated on drawing No. 02320-1:
   1. Outside diameter of spacer to be sized slightly smaller than casing pipe inside diameter to limit carrier pipe movement.
   2. Install in accordance with casing spacer manufacturer's recommendations.

3.04 END SEALS

A. End seals shall be used on all casing pipe.
B. Install end seals as indicated on drawing 02320-1 and as follows:
   1. After inside of casing has been thoroughly cleaned.
   2. After carrier pipe has been permanently placed inside casing.

3.05 WATER MAINS NEAR GAS MAINS

A. General:
   1. Casings shall be installed as specified herein and in accordance with drawing 02320-2.
   2. A water main shall be encased in PVC pipe when it will be installed within 10 feet of a metallic gas main with impressed current.
   3. Water mains being constructed near non-metallic pipe do not require encasement.
   4. Locations for which PVC pipe encasement is required shall be shown on the Drawings.
   5. If the Contractor exposes a metallic gas main that is not shown on the Drawings, the City shall be notified immediately for further direction before the water main is installed.
   6. Water mains installed with PVC casings shall also be protected by two layers of polyethylene encasement.
   7. Casing spacers shall be installed in accordance with manufacturer's recommendations, see drawing 02320-2.

B. Pipe Crossings:
   1. PVC casing pipe shall be extended for a distance of at least 10 feet on each side of the gas main being crossed, or as indicated on the Drawings.
   2. Double polyethylene encasement shall be extended a minimum of 25 feet on each side of the crossing, or as indicated on the Drawings.

C. Parallel Installations:
   1. The carrier pipe shall be encased at all locations where the carrier pipe is within 10 feet of the gas main.
   2. Double polyethylene encasement shall be installed to a point at least 25 feet beyond the end of the casing.

Drawings 02320-1 and 02320-2 are on the following two pages.

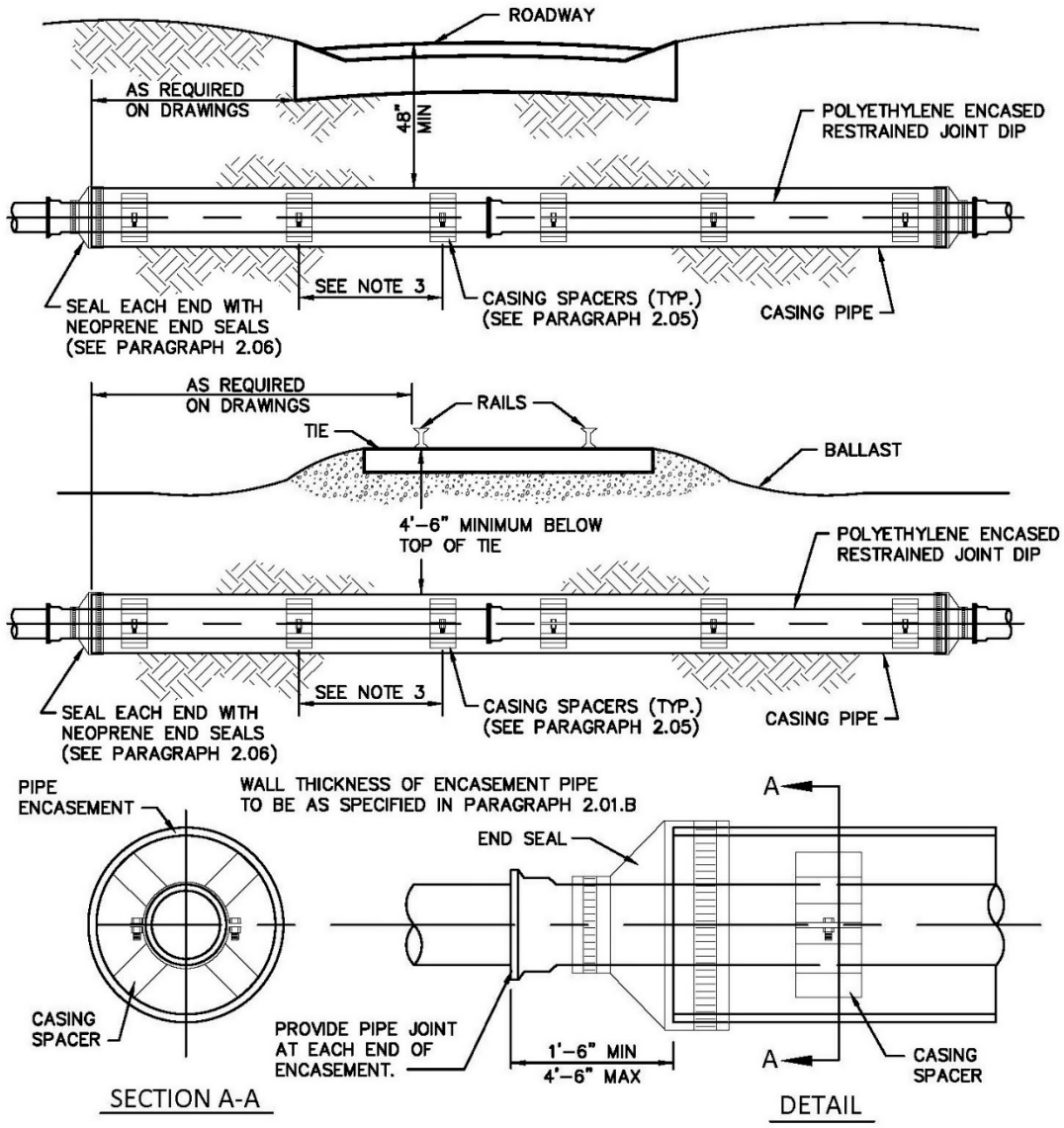

NOTES:

1. DETAILS SHOWN ARE SIMILAR FOR ALL CASING MATERIALS.
2. POLYETHYLENE ENCASEMENT SHALL BE INSTALLED ON ALL WATER MAIN PRIOR TO INSTALLING SPACERS AND PLACING IN CASING PIPE.
3. THE NUMBER OF CASING SPACERS AND THE DISTANCE BETWEEN CASING SPACERS SHALL BE PER MANUFACTURER'S RECOMMENDATION.

TYPICAL CASING INSTALLATION UNDER ROADWAYS AND RAILROADS

WATER SERVICES
CITY OF KANSAS CITY, MISSOURI

DRAWING NO. 02320-1

DEVELOPED BY: TECHNICAL ADVISORY COMMITTEE

APPROVED BY:

DATE: 3/15/2021

1 OF 1

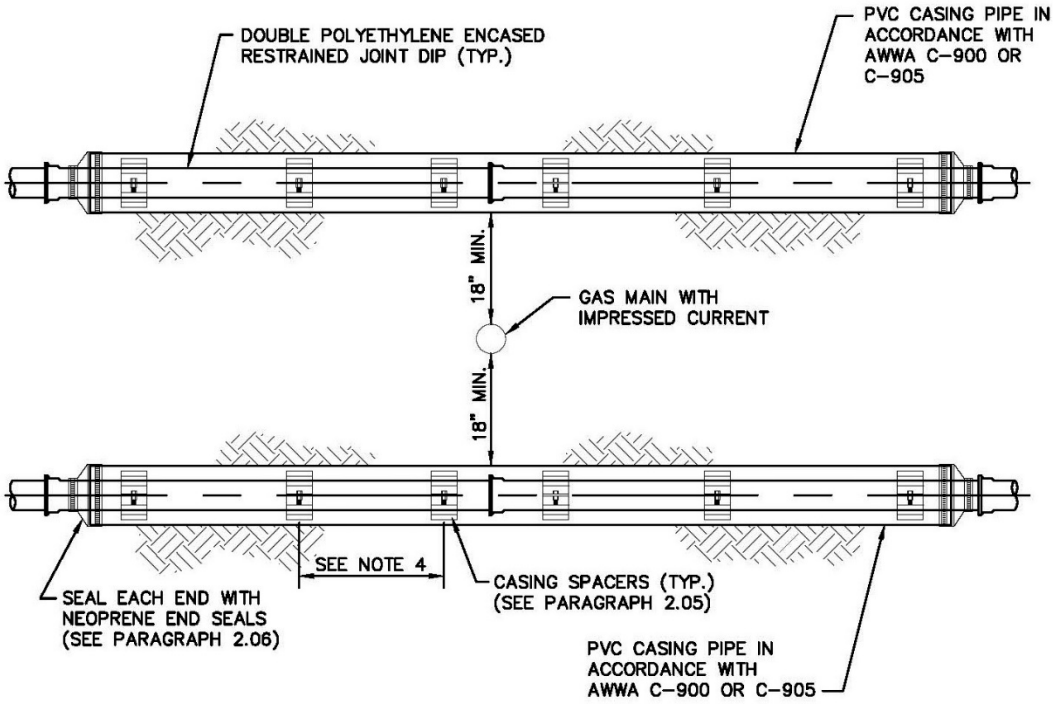

NOTES:

1. INSTALL DOUBLE THICKNESS OF POLYETHYLENE ENCASEMENT ON WATER MAIN A MINIMUM 25' BEYOND THE END OF THE CASING ON EACH SIDE.
2. INSTALL CASING PIPE LENGTH REQUIRED TO EXTEND 10' BEYOND EACH SIDE OF GAS MAIN.
3. MINIMUM DIAMETER OF CASING PIPE SHALL BE PER PARAGRAPH 2.01.B.
4. THE NUMBER OF CASING SPACERS AND THE DISTANCE BETWEEN CASING SPACERS SHALL BE PER MANUFACTURER'S RECOMMENDATION.

WATER MAIN / GAS MAIN CROSSINGS

WATER SERVICES
CITY OF KANSAS CITY, MISSOURI
DRAWING NO. 02320-2

DEVELOPED BY: TECHNICAL ADVISORY COMMITTEE
APPROVED BY:
DATE: 3/15/2021

1 OF 1

END OF SECTION

SECTION 02503 – SEWER MAINLINE OPEN-CUT POINT REPAIR

PART 1 - GENERAL

1.1 SUMMARY

This section applies to the open-cut point repair of a public sewer which lies within public rights-of-way or in utility easements under the control of the City for sewer purposes.

1.2 RELATED SECTIONS

A. Section 01000 – General Project Requirements.
B. Section 01300 – Submittals.
C. Section 02200 – Earthwork.
D. Section 02250 – Trenching, Pipe Embedment and Backfill.
E. Section 02575 – Surface Restoration.
F. Section 02620 – Ductile Iron Pipe for Sewers.
G. Section 02624 – Polyvinyl Chloride (PVC) Gravity Sewer Pipe.

1.3 CODES AND STANDARDS

A. The publications listed below form a part of this specification to the extent referenced. The publications are referred to within the text by the basic designation only.
B. American Society for Testing and Materials (ASTM):

A746	Standard Specification for Ductile Iron Gravity Sewer Pipe.
C425	Standard specification for compression joints for VCP.
C1173-18	Standard specification for flexible transition couplings for underground piping systems.
D16	Standard Terminology for Paint, Related Coatings, Materials, and Applications.
D1784	Standard Specification for Rigid Polyvinyl Chloride (PVC) Compounds and Chlorinated Polyvinyl Chloride (CPVC) Compounds.
D2241	Standard Specification for Polyvinyl Chloride (PVC) Pressure Rated Pipe (SDR Series).
D2412	Standard Test Method for Determination of External Loading Characteristics of Plastic Pipe by Parallel Plate Loading.
D3034	Standard Specification for Type PSM Polyvinyl Chloride (PVC) Solid Wall Sewer Pipe and Fittings.
D3212	Standard Specification for Joints for Drain and Sewer Plastic Pipes Using Flexible Elastomeric Seals.
E329	Standard Specification for Agencies Engaged in the Testing and/or Inspection of Materials Used in Construction.
F477	Standard Specification for Elastomeric Seals (Gaskets) for Joining Plastic Pipe.
F679	Standard Specification for Poly Vinyl Chloride (PVC) Large Diameter Plastic Gravity Sewer Pipe and Fittings.

1.4 SUBMITTALS

A. Drawings, specifications, and data covering the proposed materials shall be submitted to the City in accordance with Section 01300 - Submittals. The Contractor shall submit the following to the City for review and approval:
   1. Pipe, fittings and couplings.
   2. Information on gasket polymer properties.
   3. Application methods, application requirements and chemical resistance data for all products furnished.
   4. Manufacturer's Certificate of Compliance.
   5. Pipe embedment, backfill, materials and sub-contractor used for site restoration.
   6. CCTV Inspection Equipment: Submit minimum 15 days prior to performing inspections:
      a. Name and qualifications of inspection firm.
      b. Brand name and model number of video equipment to be used.
   7. CCTV inspection video and inspection logs. Video shall become property of the City.
   8. Permits:
      a. The Contractor shall obtain all necessary permits and licenses required to perform the Work.

1.5 DEFINITIONS

A. ANSI: American National Standards Institute.
B. ASTM: American Society for Testing and Materials.
C. AWWA: American Water Works Association.
D. CCTV: Closed Circuit Television.
E. DIP: Ductile Iron Pipe.
F. PVC: Poly Vinyl Chloride.
G. SDR: Standard Dimension Ratio.

1.6 QUALITY ASSURANCE

A. The Contractor is responsible for the quality assurance and quality control of the Work.
B. All Work shall be performed by a Contractor with a proven record of performance for similar installations. Contractor shall submit the following:
   1. CCTV Inspection Company must have actively performed such services for minimum of 2 years.
   2. Warranty Terms and Period: Contractor's warranty period shall be three (3) years for the performance and maintenance of the work performed.

1.7 PRODUCT DELIVERY, STORAGE AND HANDLING

A. Packaging, handling, delivery and storage of materials shall be done in accordance with this Section, the manufacturer's recommendations and in accordance with Section 01000 – General Project Requirements.
B. Delivery of materials shall be in manufacturer's original unopened and undamaged packages. Materials shall be clearly marked to identify brand name and contents on each package. Packages showing signs of damage that may affect the condition of the contents are not acceptable.

PART 2 - PRODUCTS

2.1 MATERIALS

A. Pipe:
   1. Approved pipe materials are: polyvinyl chloride (PVC) or ductile iron pipe (DIP).
   2. Pipe materials other than those listed above shall not be used for sanitary sewers unless otherwise approved by the City.
   3. General requirements:
      a. Ductile Iron Pipe (DIP) shall conform to Section 02620 – Ductile Iron Pipe for Sewers.
      b. Polyvinyl Chloride (PVC) pipe shall conform to Section 02624 – Polyvinyl Chloride (PVC) Gravity Sewer Pipe.

B. Fittings:
   a. All fittings shall be factory-produced and shall be designed for installation on the pipe to be used. Fittings shall be of the same quality and material as the pipe used.
   b. Couplings for point repairs:
      i. All couplings shall form tight compression joints.
      ii. When connecting to the existing sanitary sewer, the Contractor shall use Non-Shear Fernco Strongback 5000 series couplings, MaxAdaptor couplings or City approved equal.

PART 3 - EXECUTION

3.1 SAFETY

A. All work shall be performed in accordance with applicable OSHA standards.

3.2 PREPARATION

A. Contractor shall clear the work area required for excavation in accordance with Section 02200 – Earthwork. It is the Contractor's responsibility to provide a photo or video log of the work zone(s) and to protect and restore the area to a condition as good as or better than it was before the Work was started. All removed fences; shrubbery, sidewalks, planters and landscaping shall be restored utilizing new materials unless otherwise directed in writing by both the Owner/Occupant and the City.

B. Existing Utilities:
   1. The Contractor is responsible for protecting all utilities. All permits and licenses required for the execution of the Work shall be obtained by the Contractor.
   2. The Contractor shall notify all utilities at least 48 hours in advance before making excavation in accordance with Missouri State Law.
   3. When water mains or water service lines exist in the area, the Contractor shall comply with all applicable rules and regulations of the Kansas City, Missouri Water Services Department and the Code of State Regulations.

3.3 INSTALLATION

A. General Construction Requirements:
   1. Open cut point repairs on a sanitary sewer shall be done in accordance with drawing 02503-1 and as described herein.

B. Excavation:
   1. Excavation required for sanitary sewers shall be done in accordance with Section 02200 – Earthwork except as modified herein.
   2. Width of Trench: The width of trench at the top of a pipe shall not exceed the outside diameter of the pipe plus eighteen (18) inches.
   3. Sheeting, Shoring and Bracing: The Contractor shall do all necessary trench bracing, shoring, or sheeting to prevent slides or cave-ins. Additional shoring, sheeting, and bracing shall be placed wherever required, as determined by the Water Services Department, for the successful and safe execution of the work.

C. Pipe Embedment and Backfill:
   1. The granular embedment and backfill for sanitary sewers shall be done in accordance with Section 02250 – Trenching, Pipe Embedment and Backfill. See also drawing 02503-1.
   2. The sewer trench in earth excavation shall be carried to a point not less than four (4) inches below the bottom of the pipe barrel and when in rock excavation to a point not less than six (6) inches below the bottom of pipe barrel.
   3. Installation:
      a. Pipe Embedment: The pipe bedding shall be compacted to the bottom of pipe with proper allowance for bell joints. After each section or joint of pipe has been shoved "home" and placed in proper alignment, twelve (12) inches (no more, no less) of pipe embedment shall be placed above the pipe and compacted by hand or mechanical tampers. In no case shall brick or other large stones be used as bedding or as trench backfill.
      b. Backfill: After compacting the 12 inches of granular bedding above the pipe, see Section 02250 – Trenching, Pipe Embedment and Backfill for the backfill requirements of the remaining trench (in paved and in unpaved areas).

3.4 COMPLETION OF WORK AND SITE RESTORATION

A. All applicable inspection policies, procedures, and charges are made part of these specifications by reference and are subject to change by the City without notification. Copies of current policies, procedures and fee schedules may be obtained from the Water Services Department.

B. Site Restoration shall be done in accordance with Section 02575 – Surface Restoration. All pavement, surfacing, driveways, sidewalks, curb, gutter, sod, landscape and all other surface features affected by the work shall be restored.

Drawing 02503-1 on the following page.

Drawing 02503-1

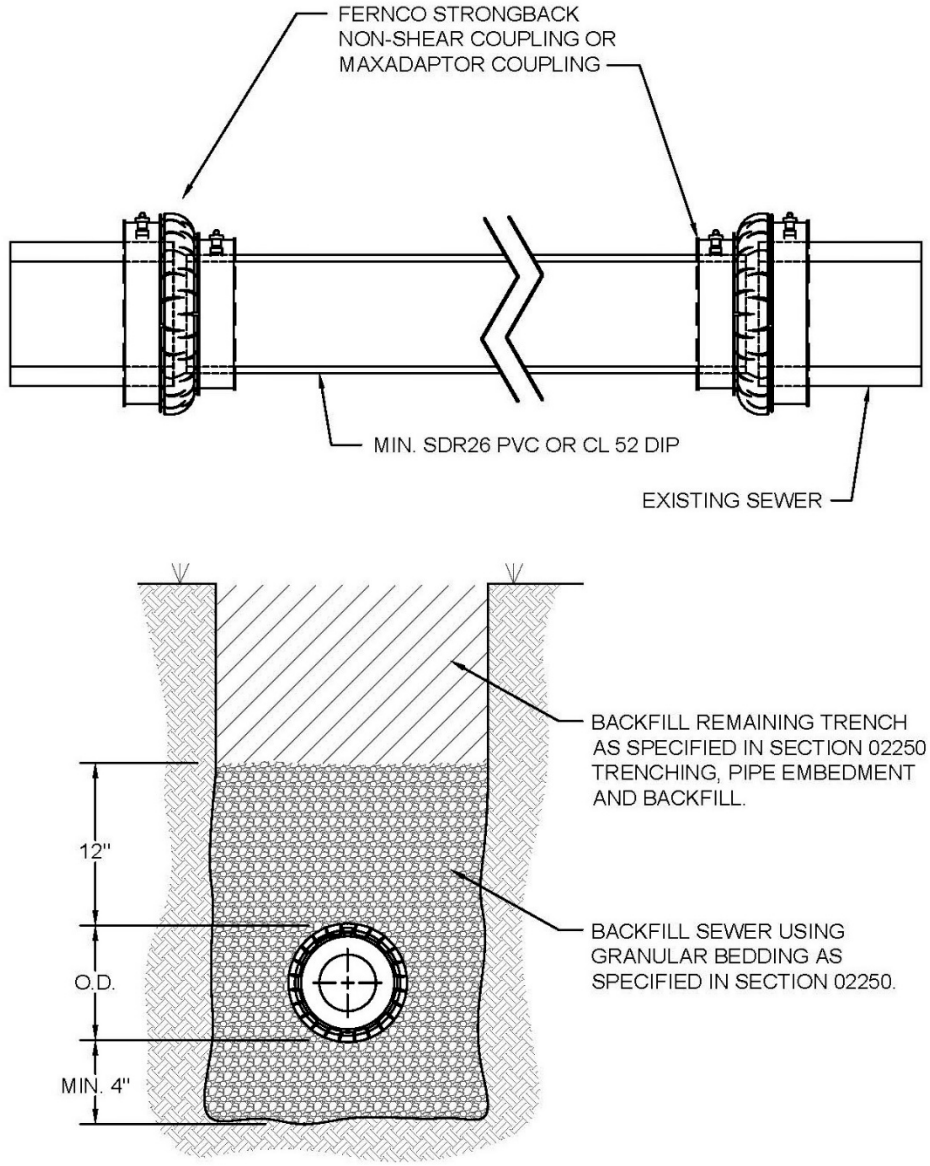

SCALE: NTS

SEWER MAINLINE OPEN CUT REPAIR

WATER SERVICES
CITY OF KANSAS CITY, MISSOURI
DRAWING NO. 02503-1

DEVELOPED BY: TECHNICAL ADVISORY COMMITTEE
APPROVED BY:
DATE: 4/16/2021

1 OF 1

END OF SECTION

SECTION 02505 – SANITARY SEWER SERVICE LINES AND CONNECTIONS

PART 1 - GENERAL

1.1 SUMMARY

This section applies to sanitary sewer service lines and connections to a public sewer which lie within public rights-of-way or in utility easements under the control of the City for sewer purposes. A sanitary sewer service line or sewer lateral is defined as the sewer line that begins and extends from the building which receives the sewage discharge of the building and conveys it to a public sewer or another private sewer. The sanitary sewer service line connection is the point where the sewer service line taps into the public sewer. The property owner owns the sanitary sewer service line from their building to the public sewer, including its connection thereto, and is solely responsible for its operation and maintenance (drawing 02505-1 illustrates the boundaries of this responsibility within public rights-of-way). If this specification conflicts with other specifications, this specification shall govern. If this specification conflicts with the Code of Ordinances, the Code of Ordinances govern.

1.2 RELATED SECTIONS

A. Section 01000 – General Project Requirements.
B. Section 01300 – Submittals.
C. Section 02200 – Earthwork.
D. Section 02250 – Trenching, Pipe Embedment and Backfill.
E. Section 02575 – Surface Restoration.
F. Section 02620 – Ductile Iron Pipe for Sewers.
G. Section 02624 – Polyvinyl Chloride (PVC) Gravity Sewer Pipe.
H. Section 06012 – Rehabilitation of Sewer Laterals and Sewer Lateral Connections.

1.3 CODES AND STANDARDS

A. Sanitary sewer service lines and its connection to the public sewer shall conform to all requirements set forth by the City, including but not limited to, ordinances, standards and specifications.
B. The publications listed below form a part of this specification to the extent referenced. The publications are referred to within the text by the basic designation only.
C. American Society for Testing and Materials (ASTM):
   - A746 Standard Specification for Ductile Iron Gravity Sewer Pipe.
   - D16 Standard Terminology for Paint, Related Coatings, Materials, and Applications.
   - D1784 Standard Specification for Rigid Polyvinyl Chloride (PVC) Compounds and Chlorinated Polyvinyl Chloride (CPVC) Compounds.
   - D2241 Standard Specification for Polyvinyl Chloride (PVC) Pressure Rated Pipe (SDR Series).
   - D2412 Standard Test Method for Determination of External Loading Characteristics of Plastic Pipe by Parallel Plate Loading.
   - D3034 Standard Specification for Type PSM Polyvinyl Chloride (PVC) Solid Wall Sewer Pipe and Fittings.
   - D3212 Standard Specification for Joints for Drain and Sewer Plastic Pipes Using

Flexible Elastomeric Seals.

E329 Standard Specification for Agencies Engaged in the Testing and/or Inspection of Materials Used in Construction.

F477 Standard Specification for Elastomeric Seals (Gaskets) for Joining Plastic Pipe.

F679 Standard Specification for Poly Vinyl Chloride (PVC) Large Diameter Plastic Gravity Sewer Pipe and Fittings.

1.4 SUBMITTALS

A. Drawings, specifications, and data covering the proposed materials shall be submitted to the City in accordance with Section 01300 - Submittals. The Contractor shall submit the following to the City for review and approval:
   1. Pipe, fittings and couplings.
   2. Information on gasket polymer properties.
   3. Tee fabrication details.
   4. Application methods, application requirements and chemical resistance data for all products furnished.
   5. Manufacturer's Certificate of Compliance.
   6. Pipe embedment, backfill, materials and sub-contractor used for site restoration.
   7. CCTV Inspection Equipment: Submit minimum 15 days prior to performing inspections:
      a. Name and qualifications of inspection firm.
      b. Brand name and model number of video equipment to be used.
   8. CCTV inspection video and inspection logs. Video shall become property of the City.
   9. Permits:
      a. The Contractor shall obtain all necessary permits and licenses required by the City, County and State.

1.5 DEFINITIONS

A. ABS: Acrylonitrile Butadiene Styrene.
B. ANSI: American National Standards Institute.
C. ASTM: American Society for Testing and Materials.
D. AWWA: American Water Works Association.
E. CCTV: Closed Circuit Television.
F. CIPP: Cured In-Place Pipe.
G. DIP: Ductile Iron Pipe.
H. PVC: Poly Vinyl Chloride.
I. SDR: Standard Dimension Ratio.
J. VCP: Vitrified Clay Pipe.

1.6 QUALITY ASSURANCE

A. The Contractor is responsible for the quality assurance and quality control of the Work.
B. All Work shall be performed by a Contractor with a proven record of performance for similar installations. Contractor shall submit the following:
   1. CCTV Inspection Company must have actively performed such services for minimum of 2 years.
   2. Warranty Terms and Period: Contractor's warranty period shall be three (3) years

for the performance and maintenance of the work performed.

1.7 PRODUCT DELIVERY, STORAGE AND HANDLING

A. Packaging, handling, delivery and storage of materials shall be done in accordance with this Section, the manufacturer's recommendations and in accordance with Section 01000 – General Project Requirements.

B. Delivery of materials shall be in manufacturer's original unopened and undamaged packages. Materials shall be clearly marked to identify brand name, contents and order number on each package. Packages showing signs of damage that may affect the condition of the contents are not acceptable.

PART 2 - PRODUCTS

2.1 MATERIALS

A. Pipe:

1. Approved pipe materials are: polyvinyl chloride (PVC) or ductile iron pipe (DIP).
2. Pipe materials other than those listed above shall not be used for sanitary sewer service laterals unless otherwise approved by the City.
3. General requirements:
   a. No sanitary sewer service line shall be constructed with an inside diameter of less than four (4) inches.
   b. Ductile Iron Pipe (DIP) shall conform to Section 02620 – Ductile Iron Pipe for Sewers.
   c. Polyvinyl Chloride (PVC) pipe shall conform to Section 02624 – Polyvinyl Chloride (PVC) Gravity Sewer Pipe.

B. Fittings:

a. All fittings shall be factory-produced and shall be designed for installation on the pipe to be used. Fittings shall be of the same quality and material as the pipe used.
b. Saddles for Tapping the Public Sewer:
   i. VCP sewer main: a plastic (PVC) strap on saddle with a neoprene gasket under the saddle shall be used.
   ii. PVC sewer main: a plastic (PVC) strap on saddle with a neoprene gasket under the saddle shall be used.
   iii. DIP sewer main: a plastic (PVC) strap on saddle with a neoprene gasket under the saddle shall be used.
   iv. ABS sewer main: a plastic (PVC) strap on saddle with a neoprene gasket under the saddle shall be used.
c. Couplings for point repairs:
   i. All couplings shall form tight compression joints.
   ii. When connecting to the existing sanitary sewer service line, the Contractor shall use Non-Shear Fernco Strongback 5000 series couplings, MaxAdaptor couplings or City approved equal.

PART 3 - EXECUTION

3.1 SAFETY

A. All work shall be performed in accordance with applicable OSHA standards.

3.2 PREPARATION

A. Contractor shall clear the work area required for excavation in accordance with Section 02200 – Earthwork. It is the Contractor's responsibility to provide a photo or video log of the work zone(s) and to protect and restore the area to a condition as good as or better than it was before the Work was started. All removed fences; shrubbery, sidewalks, planters and landscaping shall be restored utilizing new materials unless otherwise directed in writing by both the Owner/Occupant and the City.

B. Existing Utilities:
   1. The Contractor is responsible for protecting all utilities. All permits and licenses required for the execution of the Work shall be obtained by the Contractor.
   2. The Contractor shall notify all utilities at least 48 hours in advance before making excavation in accordance with Missouri State Law.
   3. When water mains or water service lines exist in the area, the Contractor shall comply with all applicable rules and regulations of the Kansas City, Missouri Water Services Department and the Missouri State Board of Health.

3.3 INSTALLATION

A. General Construction Requirements:
   1. The maximum turn permissible at any one fitting shall be forty-five (45) degrees (one-eighth (⅛) bend).
   2. Sanitary sewer service lines shall be connected to a tee, wye or a manhole on the public sewer when such is available. Where no tee, wye or manhole is available, the sewers shall be tapped. Paragraph 2.1.B. lists the type of saddles permissible depending on the material of the sewer to be tapped.
   3. Open cut point repairs on a sanitary sewer service lateral shall be done in accordance with drawing 02505-2 and as described herein.
   4. Open cut replacement of a sanitary sewer service line connection shall be done in accordance with drawing 02505-3 and as described herein.

B. Excavation:
   1. Excavation required for sanitary sewer service lines shall be done in accordance with Section 02200 – Earthwork except as modified herein.
   2. Width of Trench: The width of trench at the top of a pipe shall not exceed the outside diameter of the pipe plus eighteen (18) inches.
   3. Boring/Tunneling:
      a. Boring/Tunneling will be permitted only under existing utilities or upon permission from the Water Services Department.
      b. If boring/tunneling is permitted, the Contractor shall submit to the Water Services Department for approval the method of boring/tunneling, type of bracing and precautions used to prevent a collapse.
   4. Sheeting, Shoring and Bracing: The Contractor shall do all necessary trench bracing, shoring, or sheeting to prevent slides or cave-ins. Additional shoring, sheeting, and bracing shall be placed wherever required, as determined by the Water Services Department, for the successful and safe prosecution of the work.

C. Pipe Embedment:
   1. The granular embedment for sanitary sewer service lines shall be placed in accordance with Section 02250 – Trenching, Pipe Embedment and Backfill.

2. The sewer trench in earth excavation shall be carried to a point not less than four (4) inches below bottom of the pipe barrel and in rock excavation to a point not less than six (6) inches below bottom of pipe barrel.
3. Installation:
   a. The pipe bedding shall be compacted to the bottom of pipe with proper allowance for bell joints. After each joint of pipe has been shoved "home" and placed in proper alignment, pipe embedment shall be placed and compacted to a minimum of twelve (12) inches above the pipe bell. In no case shall brick or other large stones be used as bedding.

D. Line and Grade: Minimum Grade: The minimum grade allowable for private sewers in public right-of-way will be one-fourth (¼) inch per linear foot. A grade as little as one-eighth (⅛) inch per linear foot may be allowed in special cases upon written permission from the Water Services Department. In no case will a private sewer in public right-of-way be constructed having a grade less than one-eighth (⅛) inch per linear foot.

E. Minimum Allowable Cover: A minimum cover of four (4) feet from top of pipe to the finish grade of ground surface is required for all sanitary sewer service lines in public rights-of-way or in utility easements under the control of the City for sewer purposes.

F. Backfill:
   1. Backfill shall be done in accordance with Section 02250 – Trenching, Pipe Embedment and Backfill.
      a. Bedding material shall be placed a minimum of one (1) foot above the top of the sanitary sewer service line. Such material shall be carefully tamped around the pipe by hand or mechanical tampers.
      b. See Section 02250 – Trenching, Pipe Embedment and Backfill for backfill requirements in paved areas and in unpaved areas.
   2. Filling the annular space in a casing (space between carrier pipe and casing):
      a. Material shall be stabilized sand consisting of sand mixed to a ratio of twelve (12) parts sand to one (1) part cement.
      b. Stabilized sand shall be placed in a manner that will completely fill all voids between the casing and the outside diameter of the pipe. Adequate provisions shall be made to prevent the mixture from running out the ends of the casing.

G. Tapping City Sewers: All applicable tapping policies and procedures are made part of these specifications by reference and are subject to change by the City without notification. Copies of current policies and procedures as well as fee schedules used in charging for City-made taps can be obtained from the Water Services Department.

3.4 COMPLETION OF WORK AND SITE RESTORATION

A. All applicable inspection policies, procedures, and charges are made part of these specifications by reference and are subject to change by the City without notification. Copies of current policies, procedures and fee schedules may be obtained from the Water Services Department.

B. Site Restoration shall be done in accordance with Section 02575 – Surface Restoration. All pavement, surfacing, driveways, sidewalks, curb, gutter, sod, landscape and all other surface structures affected by the work shall be restored.

Drawings 02505-1 through 02505-3 are on the following three pages.

Drawing 02505-1

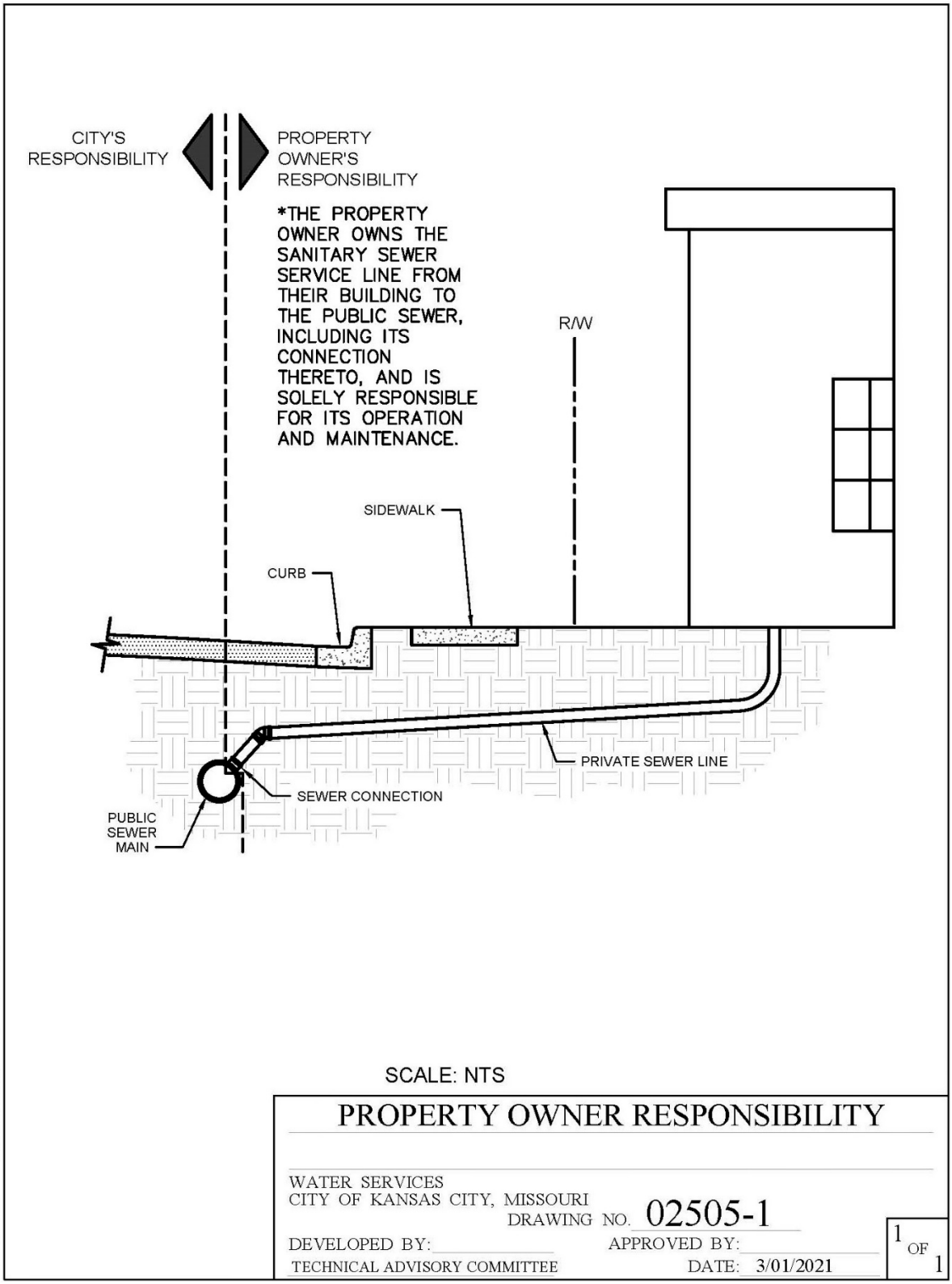

Drawing 02505-2

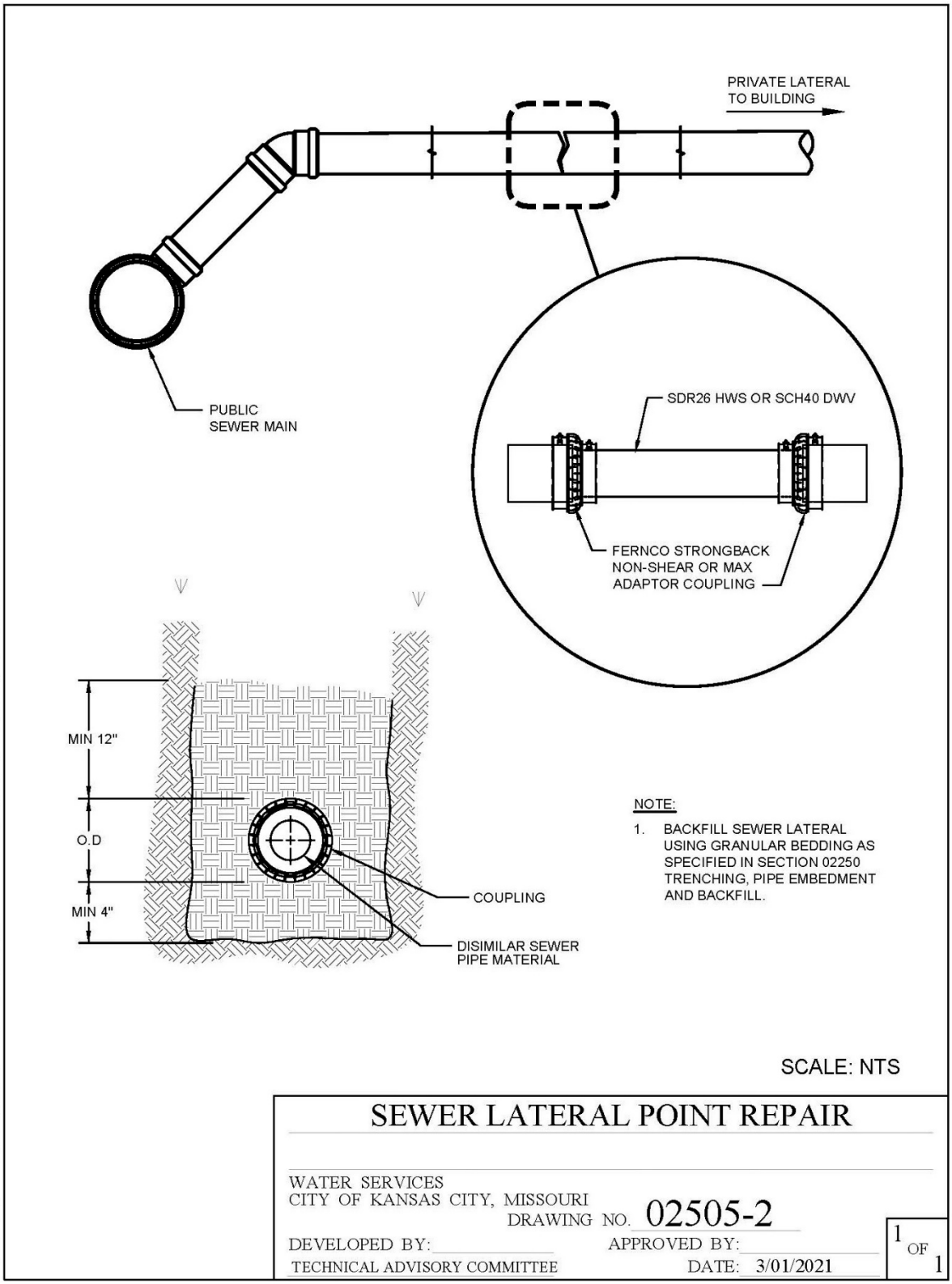

Drawing 02505-3

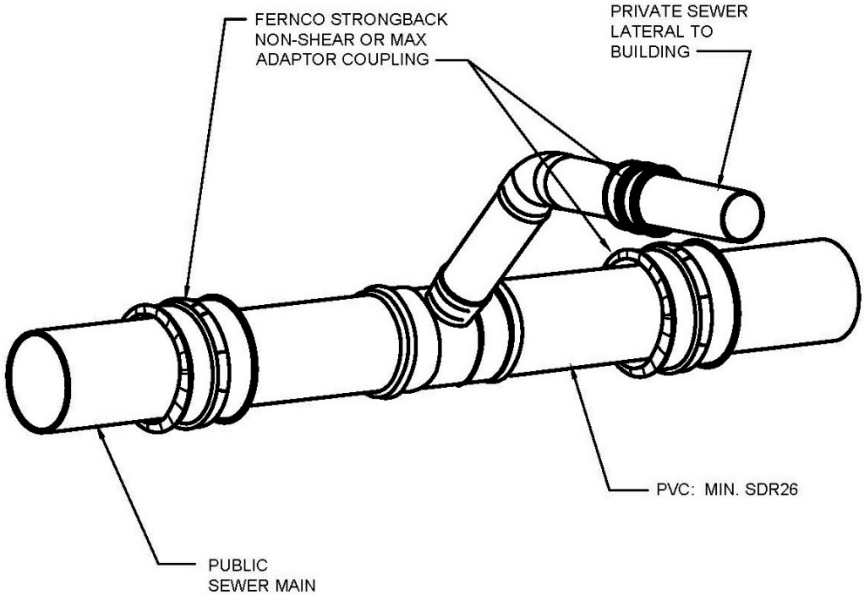

NOTE:

1. BACKFILL PUBLIC SEWER MAIN AND PRIVATE SEWER LATERAL USING GRANULAR BEDDING AS SPECIFIED IN SECTION 02250 TRENCHING, PIPE EMBEDMENT AND BACKFILL.

SCALE: NTS

SEWER LATERAL CONNECTION REPAIR

WATER SERVICES
CITY OF KANSAS CITY, MISSOURI
DRAWING NO. 02505-3

DEVELOPED BY: TECHNICAL ADVISORY COMMITTEE
APPROVED BY:
DATE: 3/01/2021

1 OF 1

END OF SECTION

SECTION 02575 – SURFACE RESTORATION

PART 1 - GENERAL

1.01 SUMMARY

A. This section covers Work associated with surface restoration within the City's right-of-way, provided easements and other areas disturbed during construction.

B. The Contractor shall replace all surface material and shall restore paving, curbing, sidewalks, gutters, shrubbery, fences, sod and all other surfaces disturbed or damaged by construction activities to a condition of equal or better than before the start of the Work.

C. The Contractor shall restore the Site to conditions not less than that which existed prior to starting construction unless otherwise required by: the contract documents, permits and/or licenses.

D. Coordinate surface restoration work with the affected property owners and the City/Design Professional. Special requests for restoration should be documented in writing and provided to the City/Design Professional.

E. Private property on which the City has prior rights (i.e. easements, general utility easement, etc.) and/or has obtained easements, rights-of-way, licenses and/or agreements from the property owner shall be restored in conformance with these Contract Documents. Restore public property in accordance with the requirements of the department or public body having jurisdiction. Such entities include, but are not limited to, the following:

1. The City of Kansas City, MO Public Works Department.
2. The City of Kansas City, MO Parks and Recreation Department.
3. Missouri Department of Transportation.

1.02 SPECIFICATION MODIFICATIONS

A. It is understood that throughout this section, these Specifications may be modified by appropriate items in Section 01015 – Specific Project Requirements or as otherwise indicated in the contract documents.

1.03 RELATED SECTIONS

A. Section 00700 – General Conditions.
B. Section 00800 – Supplementary Conditions.
C. Section 01000 – General Project Requirements.
D. Section 01015 – Specific Project Requirements.
E. Section 01320 – Construction Progress Documentation
F. Section 01322 – Photographic and Video Documentation.
G. Section 01566 – Cleanup Operations.
H. Section 02200 – Earthwork.
I. Section 02250 – Trenching, Pipe Embedment and Backfill.
J. Section 02930 – Seeding.
K. Section 02931 – Sodding.
L. Section 02949 – Tree Protection, Removal and Replacement.

1.04 CODES AND STANDARDS

A. The publications listed below form a part of this specification to the extent referenced. The most recent version of the publications are referred to within the text by the basic designation only.

B. The City of Kansas City, Missouri Department of Public Works Construction and Material Specifications (http://kcmo.gov/publicworks/design-construction-standards/):

KCMO PW 2200*	Section 2200, Paving.
KCMO PW 2202	Subsection 2202, Untreated Compacted Aggregate.
KCMO PW 2204	Subsection 2204, Prime and Tack Coat.
KCMO PW 2209	Subsection 2209, Curbing.
KCMO PW 2211	Subsection 2211, Smoothness.
KCMO PW 2301	Subsection Section 2301, Incidental Construction, Standard. Sidewalks, Sidewalk Ramps, Driveways and Bicycle/Pedestrian Paths.
KCMO PW 2302	Subsection 2302 Asphalt Sidewalks, Driveways and Bicycle/Pedestrian Paths.
KCMO PW 2306	Subsection 2306 Pavement Markings.

C. The City of Kansas City, Missouri Department of Public Works Standard Drawings (http://kcmo.gov/publicworks/standard-drawings/):

KCMO PW C*	Standard Drawing Number C, Curbs.
KCMO PW D-1	Standard Drawing Number D-1, Driveway Entrances.
KCMO PW D-2	Standard Drawing Number D-2, Reconstructed Driveways.
KCMO PW D-US	Standard Drawing Number D-US, Driveway Unimproved Streets.
KCMO PW SR-1	Standard Drawing Number SR-1, Street Cut Restoration.

D. The City of Kansas City, Missouri Parks and Recreation Department (https://kcparks.org/services/parks-planning-and-design-services/):

KCMO PR CR*	Standard Detail Number CR, Rollback Curb and Gutter.
KCMO PR DC	Standard Detail Number DC, Commercial Driveway.
KCMO PR DR	Standard Detail Number DR, Residential Driveway.
KCMO PR SC	Standard Detail Number SC, Commercial Sidewalk.
KCMO PR SR	Standard Detail Number SR, Residential Sidewalk.
KCMO PR ARA	Standard Detail Number ARA, ADA Curb Ramp-Type A.
KCMO PR ARB	Standard Detail Number ARB, ADA Curb Ramp-Type B.
KCMO PR C	Standard Detail Number C, Curb.
KCMO PR CG	Standard Detail Number CG, Curb and Gutter.
KCMO PR CJ	Standard Detail Number CJ, Concrete Joint.

*Abbreviation used within this specification section to distinguish between the standards of the Public Works Department (PW) and the Parks and Recreation Department (PR).

E. American Society for Testing and Materials (ASTM):

ASTM D 422	Standard Test Method for Particle-Size Analysis of Soils, grain-size, hydrometer analysis, hygroscopic moisture, particle-size, sieve analysis.
ASTM C 309	Standard Specification for Liquid Membrane-Forming Compounds for Curing Concrete.
ASTM A 615	Standard Specification for Deformed and Plain Carbon-Steel Bars for Concrete Reinforcement.
ASTM D 977	Standard Specification for Emulsified Asphalt.
ASTM D 2397	Standard Specification for Cationic Emulsified Asphalt.

ASTM D 2027	Standard Specification for Cutback Asphalt (Medium-Curing Type).
ASTM D 2028	Standard Specification for Cutback Asphalt (Rapid Curing Type).
ASTM E11	Standard Specification for Woven Wire Test Sieve Cloth and Test Sieves.
ASTM D448	Standard Classification for Sizes of Aggregate for Road and Bridge Construction.
ASTM C131	Standard Test Method for Resistance to Degradation of Small-Size Coarse Aggregate by Abrasion and Impact in the Los Angeles Machine.

F. Missouri Department of Transportation:

MoDOT	Missouri Standard Specifications for Highway Construction (https://www.modot.org/missouri-standard-specifications-highway-construction).

1.05 DEFINITIONS

A. Established Lawn: An Unpaved Area of soil-covered land planted with grasses which are maintained at a height of 5 inches or less. Established lawns include, but are not limited to, grassed areas associated with residential lots, businesses, parks, cemeteries, etc.
B. Improved Street: A paved, public street, or portion thereof, that incorporates a curb and a gutter.
C. Paved Areas: Areas for which the final surfacing will be street pavement, shoulders, driveways, parking lots, curbs, gutters, sidewalks, gravel roads, or other surface construction or structures.
D. Site: Lands or areas indicated in the Contract Documents as being furnished by the City upon which the Work is to be performed, including rights-of-way and easements for access thereto, and such other lands furnished by the City which are designated for the use of the Contractor, or as defined in Section 00700 – General Conditions.
E. Unpaved Areas: Areas for which the final surfacing will not be a Paved Area.
F. Unimproved Street: A public street, or portion thereof, that does not incorporate a curb and gutter.

1.06 INFORMATION PROVIDED BY THE CITY

A. As provided in the Contract Documents.

1.07 SUBMITTALS

A. Submit as specified in Section 01300 – Submittals.
B. Shop Drawings:
   1. Submit as required by the contract documents.
C. Product Data:
   1. Submit as required by the contract documents.
D. Samples:
   1. Submit as required by the contract documents.

E. Other Submittals:
   1. The Contractor's Restoration Plan and Schedule adhering to all requirements of the contract documents.
   2. All applicable Department of Public Works standard specifications used to complete the Work.

3. All applicable Department of Public Works standard details used to complete the Work.
4. All applicable Parks and Recreation Department standard details used to complete the Work.

1.08 QUALITY ASSURANCE

A. The Contractor is responsible for the quality assurance and quality control of the Work.
B. All areas disturbed by the Contractor's operations shall be restored in accordance with the contract documents, applicable permits and as directed by the City/Design Professional.
C. All Work shall be performed by a Contractor, with a proven record of performance for the required restoration work. The Contractor shall submit the following:
   1. The materials to be used to restore the surface.

1.09 PRODUCT DELIVERY, STORAGE AND HANDLING

A. Delivery of materials shall be in manufacturer's original unopened and undamaged packages. They shall be clearly marked to identify brand name, contents and order number on each package. Packages showing indication of damage that may affect condition of contents are not acceptable.
B. Storage of material shall provide protective cover from damage and stored at temperatures in accordance with manufacturer's recommendation. Materials shall be staked or stored in accordance with manufacturer's recommendations.

1.10 RESTORATION SCHEDULE

A. Project milestones and restoration schedule criteria shall be as specified in the following sections:
   1. Section 00800 – Supplemental Conditions.
   2. Section 01015 – Specific Project Requirements.
B. The specified milestone and/or restoration schedule criteria shall be incorporated in the project schedule as required by Section 01320 – Construction Progress Documentation.

1.11 PROPERTY-SPECIFIC RESTORATION

A. Easements provided by the City for the construction of the Work may include property-specific restoration requirements. These requirements are noted on the Contract Drawings or included in Section 01015 – Specific Project Requirements.

PART 2 - PRODUCTS

2.01 INCIDENTAL CONCRETE CONSTRUCTION

A. Incidental concrete construction includes curbs, gutters, sidewalks, sidewalk ramps, ADA ramps, driveways, bicycle/pedestrian paths and other Work indicated in the Contract Documents.
B. Parks and Recreation Department Standards: Incidental concrete surface restoration for Work having jurisdiction of the City of Kansas City, Missouri Parks and Recreation Department shall comply with the standards listed in paragraph CODES AND STANDARDS. All materials and construction standards are noted on the standard details.
C. Public Works Department Standards: All materials and construction for incidental concrete surface restoration for Work having jurisdiction of the City of Kansas City, Missouri Public shall comply with the standards listed in paragraph CODES AND STANDARDS:
   1. Sidewalks: KCMO PW 2301.
   2. Sidewalk ramps: KCMO PW 2301.

3. Driveways: KCMO PW 2301.
4. Bicycle/pedestrian paths: KCMO PW 2301.
5. Curbs: KCMO PW 2209.
6. Curb and gutters: KCMO PW 2209.

2.02 GRANULAR SUBBASE MATERIAL

A. Granular subbase material for incidental concrete construction shall conform to the requirements of Section 02200-Earthwork.

2.03 INCIDENTAL ASPHALT CONSTRUCTION

A. Incidental asphalt work includes, but is not limited to, the construction of asphaltic concrete sidewalks, driveways, bicycle/pedestrian ramps and other Work indicated in the Contract Documents.
B. Materials and construction for incidental asphalt surface restoration shall comply with the standards listed in paragraph CODES AND STANDARDS, KCMO PW 2302.

2.04 PAVEMENT

A. Restoration of pavements shall include, but is not limited to, streets, parking lots, alleys, and other areas subject to traffic and other Work indicated in the Contract Documents.
B. All materials and construction shall comply with the standards listed in paragraph CODES AND STANDARDS, KCMO PW 2200 and KCMO PW SR-1.
C. Pavement shall be restored with the type of material existing prior to the Work unless otherwise noted in the Contract Documents.

2.05 PAVEMENT MARKINGS

A. Materials and construction for incidental asphalt surface restoration shall comply with the standards listed in paragraph CODES AND STANDARDS, KCMO PW 2306.
B. Paragraph Method of Measurement shall not apply.
C. Paragraph Basis of Payment shall not apply.

2.06 AGGREGATE FOR SURFACING

A. Aggregate for surfacing shall meet the requirements of Section 02200-Earthwork, paragraph GRANULAR FILL MATERIAL.

2.07 SEEDING SODDING

A. Seeding shall conform to Section 02930 – Seeding.

2.08 SODDING

A. Sodding shall conform to Section 02931 – Sodding.

PART 3 - EXECUTION

3.01 GENERAL

A. The Contractor shall restore all permanent type pavements, sidewalks, driveways, curbs, gutters, and surface structures, lawns, landscaped areas, and other land covers that are removed or disturbed as a result of construction operations (unless otherwise requested in writing by the property owner).

3.02 FINAL GRADING

A. Final grading shall conform to Section 02200 – Earthwork, paragraph FINAL GRADING AND PLACEMENT OF TOPSOIL.
B. Finish grade the area to lines and grades which existed prior to the area being disturbed, with special attention directed to proper surface drainage, and the refilling of settled excavations with earth or fill compacted to the appropriate densities required.
C. Eroded areas and areas having inadequate drainage, as indicated by ponding of water, shall be filled.
D. Ruts, deep tracks, dead furrows, and ridges shall be eliminated.
E. The area shall be smoothed by raking and/or dragging.
F. Before placing topsoil, remove and dispose of excess gravel to the satisfaction of the City. Leave no stones larger than 1 inch on the surface.
G. Flower and vegetable gardens in existence prior to this project shall have the separately stored topsoil restored unless otherwise requested in writing by the property owner.
H. Cultivated areas shall be left in tillable condition; compacted areas shall be plowed or cultivated to loosen and aerate the soil.

3.03 AGGREGATE SURFACING

A. Unless otherwise indicated on the Drawings, gravel surfaces shall be restored with a minimum 6 inches of compacted aggregate,

3.04 ESTABLISHMENT OF TURF

A. Sodding
   1. Sodding shall be conducted in accordance with Section 02931 – Sodding.
   2. Unless otherwise specified in Section 01015 – Specific Project Requirements or on the Drawings, all unpaved areas that are established lawns prior to construction that are disturbed by construction shall be sodded (temporary seeding as approved by the City/Design Professional).
   3. If the Contract Documents do not identify the type of sod to be placed, then the sod type shall be the same as the type removed or damaged as part of the Work, or as directed by the City's representative (unless otherwise requested in writing by the property owner).
   4. Section 02931 – Sodding provides specification for the following sod types
      (a) Fescue Turf:
         (i) Type 1 Sod – Turf Type Tall Fescue.
         (ii) Type 2 Sod – Kentucky Blue Grass and Turf Type Tall Fescue.
      (b) Bermuda Turf: Type 3 Sod – Bermuda Grass.
      (c) Zoysia Turf: Type 4 – Zoysia Grass.
B. Seeding:
   1. Seeding shall be conducted in accordance with Section 02930 – Seeding.
C. Maintenance:
   1. The Contractor shall be responsible for maintaining all turfed areas disturbed by construction activities.
   2. Maintenance Period: The Contractor shall maintain turfed areas until all of the following conditions have been met:
      (a) The turf, including repairs, has been established as defined herein.
      (b) The turf meets the requirements of paragraph ACCEPTABLE CONDITIONS to the satisfaction of the City.
      (c) The minimum establishment period for all new turf, including repairs has passed.
      (d) The Contractor shall be responsible for maintenance of turfed areas until establishment.

(e) If specified in Section 01015 – Specific Project Requirements, the Contractor has provided notification in accordance with paragraph NOTIFICATION OF PROPERTY OWNERS.
(f) As approved by the City in accordance with paragraph EARLY RELINQUISHMENT OF MAINTENANCE RESPONSIBILITIES.

3. All turfed areas shall be kept in a healthy growing condition by watering, weeding, mowing, trimming, edging, repairs, etc.
4. Watering and Water Usage:
   (a) Promptly after seeding or sodding, wet the area thoroughly. Watering shall continue so as to keep all areas moist as needed to promote healthy growth.
   (b) Water used in this work shall be furnished by the Contractor and shall be suitable for irrigation and free from ingredients harmful to plant life.
   (c) All watering equipment required for the work shall be furnished by the Contractor.
   (d) Water may be taken from adjacent fire hydrants or public water lines only through metered and backflow protected hydrant connections permitted and issued by the City.
5. Mowing:
   (a) All turfed areas within the limits of the Site shall be mowed with approved mowing equipment to a height of 3 inches whenever the average height of vegetation becomes 5 inches.
   (b) Grass clippings shall be bagged with the mowing processes and clippings shall be disposed of off-site.

D. Establishment Period:
1. The establishment period for turfed areas shall be no less than 30 calendar days from the time of planting or last time of repair.
2. The Contractor may not request the Final Inspection (as specified in Section 00700 – General Conditions, Article 14) until all turfed areas have completed the minimum establishment period.

E. Acceptable Conditions:
1. Turfed areas will be acceptable when grasses are growing, are in good condition, and no area more than 20 percent of the total areas is bare; of which no single area shall be more than 1-foot square in area. Any bare area larger than this will not be acceptable and shall be re-seeded or re-sodded (as applicable) at no additional cost to the City.
2. For sodded areas, the grass shall be sufficiently rooted so that that sod pads cannot be lifted from the sod bed.

F. Early Relinquishment of Maintenance Responsibilities:
1. The Contractor may request in writing the early acceptance of turfed areas and a return of maintenance responsibilities to the property owner prior to the end of the maintenance period.
2. Limitations on Acceptance of Turf:
   (a) Acceptance of this request is at the sole discretion of the City.
   (b) Acceptance of the turf for the purposes of transferring maintenance responsibilities does not constitute acceptance of the Work as a whole, Substantial Completion, Partial Utilization, or a Final Inspection as define in Section 00700 – General Conditions and modified in Section 00800 – Supplementary Conditions.
3. Before the request is made, the following conditions must be met:
   (a) The turf, including repairs, has been established.
   (b) The minimum establishment period has passed for the turf, including repairs.
   (c) Work has substantially been completed within the area, and no other construction activities are anticipated that will disturb or damage the turf.

(d) The Contractor has demobilized all labor and equipment from the area.
(e) All construction materials have been removed from the area.

4. The Contractor shall submit a written request to the City indicating the area of the Site for which turf maintenance responsibilities are to be transferred to the property owners.
5. The Contractor shall schedule and inspection with the City and /or their representative to determine if the turfed areas are acceptable as specified above.
6. If the all turf within the defined area is acceptable, then the City will provide written notification to the Contractor documenting acceptance.
7. After acceptance of the request for relinquishment of maintenance, the Contractor shall perform the following:
   (a) Within 5 working days of acceptance, document the condition of the turfed areas in accordance with Section 01322 – Photographic and Video Documentation. Photographic documentation of conditions shall be conducted at no additional cost to the City.
   (b) Notify all affected property owners in accordance with paragraph NOTIFICATION OF PROPERTY OWNERS.
   (c) Provide written notification to the City that all affected property owners have been notified of the relinquishment of maintenance responsibilities.
8. After all the requirements listed above have been meet, then the City will consider maintenance responsibility of the identified turfed areas to be transferred to the respective property owners.

G. Notification of Property Owners: In accordance with Section 01581 – Public Communications, the Contractor shall notify all affected property owners that the Work on their property has been completed, that turf has been established and that maintenance of the turfed area is now the property owner's responsibility.

3.05 TREES, BUSHES AND PLANTS: PROTECTION AND REPLACEMENT

A. Protection:
   1. The protection of trees, bushes and plants shall be done in accordance with Section 02949 – Tree Protection, Removal and Replacement.

B. Transplanting shall be done in accordance with Section 02949:
   1. Existing trees, bushes, and hedges which cannot be tied back or trimmed to prevent damage and require removal because of the proposed construction shall be transplanted with a tree spade or replaced.
   2. Tree removal shall include the removal of stump and roots as specified in Section 02949.
   3. Transplanting shall be at the location directed by the City/Design Professional or as applicable by the Parks and recreation Department.
   4. After digging the plants, properly store them until they can be transplanted.

C. Pruning or Replacement:
   1. Pruning or replacement of trees shall be done in accordance with Section 02949 – Tree Protection, Removal and Replacement.
   2. Replacement plants shall not be delivered until they can be planted.

D. Plant during the proper seasons. Do not plant in frozen soil or during unfavorable weather conditions. Dig tree pits of such size as to provide ample space for the entire root system, as the tree comes from the nursery, without crowding or bending the roots. The pits shall be 12 inches wider than the ball diameter, have vertical sides, and be six inches deeper than the thickness of the ball. Thoroughly loosen the soil in the bottom of the pit by spading to a depth of six inches. Dig holes immediately before planting. Dispose of soil earth dug from the tree pits off the project site.

3.06 STREET CUT RESTORATION

A. All pavement restoration work in streets shall conform to KCMO PW SR-1 with the following exceptions:
   1. Pipe bedding material and installation shall conform to Section 02250 – Trenching, Pipe Embedment and Backfill.
   2. Backfill material and installation shall conform to Section 02250 – Trenching, Pipe Embedment and Backfill.
   3. With respect to DETAIL 1 – ASPHALT PAVEMENT SURFACE (SR-1, page 1 of 3), the Contractor may pour the Portland cement concrete cap to finish grade. If poured to finish grade, the Contractor shall mill the top of the Portland cement concrete cap a uniform 2 inches ensuring a 2" vertical profile at edge prior to installing the 2" Patch (Type-5-01).

B. Smoothness:
   1. The finish of the pavement surface shall be substantially free from waves or irregularities and shall be true to the established crown and grade.
   2. The final surface of pavement will comply with KCMO PW 2211.
   3. Testing for smoothness shall be conducted as directed by the City/Design Professional.
   4. Measurements for smoothness shall be pass or fail at the sole discretion of the City or their representative. No pay adjustments will be considered.

C. Provide a straight joint between the existing and new surface per KCMO PW SR-1. All joints shall be at right angles. Diagonal cutting of pavement is prohibited.

D. Unless the top 2" will be milled, cure and protect all exposed concrete installed under this contract in accordance with the referenced standard.

E. Unless additives are used to accelerate curing, concrete shall achieve 70% of maximum strength before allowing traffic or construction equipment on the concrete (as proven by cylinder breaks).

3.07 CONCRETE SIDEWALKS, TRAILS, DRIVEWAY APPROACHES, AND RAMPS

A. Remove concrete to the nearest joint. Removal of partial squares shall not be allowed.

B. Saw-cut existing sidewalks at construction joints. Patching existing sidewalk squares damaged during construction activities shall not be allowed.

C. Construct in accordance with all applicable KCMO Public Works and Parks and Recreation Standards.

D. Minimum concrete thickness for residential sidewalks, trails, driveway approaches, ADA ramps, etc. shall be in accordance with the applicable KCMO Public Works or Parks and Recreation Standard.

E. All concrete shall be constructed on a minimum of 4 inches of compacted granular sub-base material.

F. Where sidewalks are constructed across aggregate driveways, increase the thickness to a minimum of six inches across the width of the driveway.

G. At locations where sidewalks intersect with streets and sidewalk restoration is required, the Contractor shall construct sidewalk ramps in accordance with KCMO PW 2301.

3.08 CONCRETE CURB AND GUTTER

A. Curb and Gutter dimensions and cross sections shall conform to existing installations. Construct new curbs and gutter in accordance with KCMO PW C.

B. Expansion joints with dowels shall be placed where the new curb abuts existing curb and as required by KCMO PW C.

3.09 DRIVEWAY ENTRANCE/APPROACH RESTORATION

A. Driveways shall be restored to a width matching preconstruction conditions, as indicated on the Drawings, or as indicated Section 01015 – Specific Project Requirements.

B. Subgrades for driveway entrance restoration shall be in accordance with Section 02200 – Earthwork, paragraph BACKFILL AND COMPACTION.

C. The Contractor shall provide full driveway flare/approach replacement if any of the following conditions are met:
   1. The Work requires removal of a portion of the driveway which includes the driveway flare/approach.
   2. The Contractor damages the driveway flare/approach.
   3. As indicated on the Drawings.
   4. As specified in Section 01015 – Specific Project Requirements.

D. The Contractor may remove the drive approach and driveway pavement within the right-of-way and/or easements necessary to facilitate the Work.

E. The limits of restorations beyond disturbed areas shall be as follows:
   1. To the Nearest Joint: The Contractor shall restore paved driveway surfaces from the street pavement to the nearest existing driveway joint.
      (a) The Contractor shall saw cut the full depth of pavement to be removed.
      (b) In no case shall the joint created by saw cutting be less than 3 feet from an existing joint. Adjust the location of the saw cut accordingly.

F. Driveway Entrance Replacement Standards: Driveways entrances that abut improved streets shall be reconstructed in accordance with the following standards:
   1. Public Works Department Standards:
      (a) KCMO PW D-1.
      (b) KCMO PW D-2.
      (c) Construction shall be in accordance with KCMO PW 2301.
   2. Parks and Recreation Department Standards:
      (a) KCMO PR DC.
      (b) KCMO PR DR.
      (c) Construction shall be in accordance with KCMO PW 2301.
   3. Asphalt Driveway Entrances Abutting Unimproved Streets: Asphalt driveway entrances that abut unimproved streets shall be reconstructed in accordance with the following standards:
      (a) KCMO PW D-US.
      (b) Construction shall be in accordance with KCMO PW 2302.
   4. Concrete Driveways abutting Unimproved Street: Concrete driveway entrances that abut unimproved streets shall be reconstructed in accordance with the following standards:
      (a) KCMO PW D-US, except that the material for construction shall be concrete.
      (b) Construction shall be in accordance with KCMO PW 2301.
      (c) The concrete thickness shall be a minimum of 6 inches.
      (d) Expansion and contraction joints shall conform to the details shown on KCMO PW D-1.
      (e) New joints shall match existing joint patterns (finished the same as existing), but shall be spaced at a maximum distance of 10 feet in both directions ($\leq$ 100 square feet).

3.10 DRIVEWAY PATCHING

A. Driveway patching will be allowed if any of the following conditions are met:
   1. The Work does not require the removal of the driveway flare.
   2. The Contractor does not damage the driveway flare/approach.

3. As indicated on the Drawings.
4. As specified in Section 01015 – Specific Project Requirements.
5. As requested in writing from the City.

B. The Contractor may remove and replace a portion of the driveway necessary to facilitate the Work and the existing driveway flare may remain. Pavement shall be removed and replaced in accordance with the following:
   1. To the Nearest Joint:
      (a) The Contractor shall remove and replace damaged driveway surfaces from the joint of the driveway flare/approach to the nearest joint of the driveway.
         i. If the nearest joint is beyond the right-of-way or easement, the Contractor may saw cut the driveway if permitted by the City/Design Professional. In no case shall the joint created by saw cutting be less than 3 feet from an existing joint.
   2. The Contractor shall saw cut the full depth of pavement to be removed.

C. Subgrades for driveway patching shall be in accordance with Section 02200 – Earthwork, paragraph BACKFILL AND COMPACTION.

D. The Contractor shall replace all paved surfaces damaged or removed for the Work.

E. Concrete Driveways:
   1. Construction shall be in accordance with KCMO PW 2301.
   2. The thickness of the concrete shall be the same as the pavement removed or 6 inches; whichever is greater.

F. Asphalt Driveways:
   1. Construction shall be in accordance with KCMO PW 2302.
   2. The thickness of the concrete shall be the same as the pavement removed or 6 inches; whichever is greater.

3.11 ASPHALTIC CONCRETE PAVEMENT

A. Construction of asphaltic concrete pavement shall conform to KCMO PW 2200.

B. The limits of asphaltic concrete replacement shall be noted on the Drawings.

C. Applicable details for asphaltic concrete pavement reconstruction shall be as indicated on the Drawings or Section 01015 – Specific Project Requirements.

3.12 PORTLAND CEMENT CONCRETE PAVEMENT

A. Construction of Portland Cement Concrete pavement shall be in accordance with KCMO PW 2200. The limits of asphalt concrete replacement shall be noted on the Drawings.

B. The limits of Portland Cement Concrete pavement replacement shall be as indicated on the Drawings.

C. Applicable details for Portland Cement Concrete pavement reconstruction shall be as indicated on the Drawings or Section 01015 – Specific Project Requirements.

3.13 SUBSTANTIAL COMPLETION/ACHIEVEMENT OF FULL OPERATION

A. When the Contractor considers the Work ready for its intended use, the Contractor shall notify the City in accordance with Section 00700 – General Conditions, Article 14 – Payments to the Contractor and Completion.

3.14 CLEANUP

A. Cleanup operations shall be conducted in accordance with Section 01566 – Cleanup Operations.

3.15 SAFETY SIGNS, BARRICADES, LIGHTS AND PROJECT SIGNS

A. Maintain adequate safety signs, barricades and lights until final restoration is completed.
B. The Contractor shall install and maintain all project signs for the duration of the Work.

3.16 MAIL BOXES

A. Mail boxes shall be maintained through the duration of the project in accordance with Section 01000 – General Project Requirements, paragraph MAIL BOXES.

END OF SECTION

SECTION 02580 – PIPE BURSTING GRAVITY SEWERS

PART 1 - GENERAL

1.01 SUMMARY

A. This section governs all labor, materials and equipment for the installation of gravity sewer pipe by the trenchless method of bursting existing pipes. The work shall be done as shown on the Drawings and in conformity with these specifications and the contract documents. The operation shall be conducted with a hydraulic or pneumatic pulling or pushing apparatus and a pipe expander or pipe reaming device. The pipe expander or reaming device shall be pushed or pulled through the existing pipe on grade, widening the existing pipe material for the insertion of the new pipe material.

1.02 SPECIFICATION MODIFICATIONS

A. It is understood that throughout this section these Specifications may be modified by appropriate items in Section 01015 – Specific Project Requirements, or as otherwise indicated on the Contract Drawings.

1.03 RELATED SECTIONS

A. Section 01000 – General Project Requirements.
B. Section 01015 – Specific Project Requirements.
C. Section 01300 – Submittals.
D. Section 01581 – Public Communications.
E. Section 02686 – Cleaning and Assessment of Gravity Lines.
F. Section 02702 – Testing Requirements for Sanitary Sewer: Mains and Manholes.
G. Section 03370 – Sanitary Sewer Manhole Construction.

1.04 CODES AND STANDARDS

A. The publications listed below form a part of this specification to the extent referenced. The publications are referred to within the text by the basic designation only.
B. American Society for Testing and Materials (ASTM):

ASTM C923	Standard Specification for Resilient Connectors between Reinforced Concrete Manhole Structures, Pipes, and Laterals
ASTM C1173	Standard Specification for Flexible Transition Couplings for Underground Piping.
ASTM D1248	Standard Specification for Polyethylene Plastics Extrusion Materials for Wire and Cable.
ASTM D2241	Standard Specification for Poly (Vinyl Chloride) (PVC) Pressure-Rated Pipe (SDR Series).
ASTM D2657	Standard Practice for Heat Fusion Joining of Polyolefin Pipe and Fittings
ASTM D2837	Standard Test Method for Obtaining Hydrostatic Design Basis for Thermoplastic Pipe Materials or Pressure Design Basis for Thermoplastic Pipe Products.
ASTM D3350	Standard Specification for Polyethylene Plastics Pipe and Fittings Materials.
ASTM F714	Standard Specification for Polyethylene (PE) Plastic Pipe (DR-PR) Based on Outside Diameter.

ASTM F2620 Standard Practice for Heat Fusion Joining of Polyethylene Pipe and Fittings.

C. Plastics Pipe Institute (PPI):

TR-3 Policies and Procedures for Developing Hydrostatic Design Basis (HDB), Pressure Design Basis (PDB), Strength Design Basis (SDB), and minimum Required Strength (MRS) Ratings for Thermoplastic Piping Materials or Pipe.

1.05 SUBMITTALS

A. Submit as specified in Section 01300 – Submittals.

B. Product Data:
   1. All pipe, fittings, and accessories to be used.
   2. The manufacturer's installation recommendations including the recommended allowable pulling force to prevent damage to the pipe.
   3. If HDPE is used, information indicating the interior color for the HDPE pipe.

C. Installation Procedure:
   1. The Contractor shall submit, in detail, the procedure and the steps to be followed for the installation of the pipe bursting system selected including, but not limited to:
      (a) Traffic control plan.
      (b) Layout, storage, and pipe handling areas.
      (c) Plan for locating, exposing, and reconnecting service laterals.
      (d) Bypass pumping plan.
      (e) Point repair plan for removing sags, offset joints, constrictions, or obstructions.
   2. Any proposed changes in installation procedures shall require submittal of revised procedures and acceptance by the City.

D. Preconstruction Television Inspections (in accordance with Section 02686 – Cleaning and Assessment of Gravity Lines).

E. Post-Construction Television Inspections (in accordance with Section 02686 – Cleaning and Assessment of Gravity Lines).

F. Updated schedule of repairs for the segments included in the contract documents which is to be submitted after the preconstruction CCTV inspections have taken place and the segments reviewed for any modifications to the planned work.

G. Certificates:
   1. Affidavit of compliance with applicable standards.
   2. Test certificates.
   3. As requested, Certificates of Training for the processes used.

1.06 QUALITY ASSURANCE

A. The Contractor is responsible for the quality assurance and quality control of the Work.

B. Work shall be performed by a Contractor, with a proven record of performance for similar installations. Contractor shall submit the following:
   1. Manufacturers shall be experienced in the design and manufacture of pipe, fittings, specials, or appurtenances for a minimum period of 5 years.
   2. Warranty:
      (a) Terms: Standard Manufacturer's warranty.
      (b) Warranty Period: Per the contract documents.

1.07 PRODUCT DELIVERY, STORAGE AND HANDLING

A. Pipe, fittings, and accessories shall be handled and stored in a manner that will ensure installation in sound, undamaged condition and as recommended by the manufacturer.
B. Equipment, tools, and methods used in handling and installing pipe and fittings shall not damage the pipe and fittings.
C. Keep interior of pipes and fittings free of dirt and debris.
D. Handle pipe, fittings, and other accessories in such manner as to ensure delivery to the trench in sound undamaged condition. Carry or use slings or other approved devices designed to protect the pipe. Do not drag pipe unless approved by the City/Design Professional as part of the pulling plan for the HDPE pipe.
E. See also Section 01000 – General Project Requirements for product handling and storage requirements.

1.08 PUBLIC COMMINICATIONS

A. Public communications shall be conducted in accordance with Section 01581 – Public Communications.

PART 2 - PRODUCTS

2.01 HIGH DENSITY POLYETHYLENE (HDPE) PIPE

A. HDPE pipe for trenchless sewer line replacement shall be solid wall high density polyethylene (HDPE) pipe, meeting the requirements of ASTM F714, ASTM D1248, and ASTM D3350.
B. The pipe shall be manufactured from high density high molecular weight polyethylene resin and shall meet or exceed the requirements of ASTM D3350 for PE4710 material with a cell classification of 445474C, or better.
C. The minimum wall thickness of the HDPE shall meet the following:

Table 1. Minimum Wall Thickness

Trench Depth	Minimum SDR
0 – 15 feet	17
> 15 feet	15.5

D. The pipe shall have sufficient strength to withstand both service and installation loads.
E. The pipe and fitting manufacturer shall certify that samples of their production pipe have undergone stress regression testing, evaluation, and validation in accordance with ASTM D2837 and PPI TR-3. Under these procedures, the minimum hydrostatic design basis shall be certified by the pipe manufacturer to be 1600 psi at 73°F and 800 psi at 140°F.

2.02 RESTRAINED JOINT PVC PIPE

A. Approved PVC pipe for trenchless sewer line replacement includes:
   1. CertaFlo™
   2. Certa-Loc™

B. Pipe manufacturer shall certify the pipe provided meets the requirements of ASTM D2241 and is made of PVC plastic having a minimum cell classification of 12454 as defined in ASTM D1784.
C. The pipe shall have a minimum wall thickness meeting or exceeding SDR 26.
D. The pipe shall have sufficient strength to withstand both service and installation loads.

2.03 NON-SHRINK GROUT

A. Non-shrink grout shall be used in accordance with Section 03370 – Sanitary Sewer Manhole Construction.

2.04 MANHOLE ADAPTERS

A. Manhole adapters for pipes between 4 and 12 inches in diameter shall be Fernco Concrete Manhole Adapter or approved equal.
B. Manhole adaptors for pipes greater than 12 inches in diameter shall be as specified in Section 01015 – Specific Project Requirements.

2.05 RE-ESTABLISHMENT OF SERVICE CONNECTIONS

A. Saddles:
   1. HDPE Pipe:
      (a) Heat fusion saddles shall be made of polyethylene pipe that meets the minimum specified physical properties and is suitable for fusion welding.
      (b) Fusion saddles shall be Branch Saddle as manufactured by Driscopipe, Miller, DuPont, or approved equal.
   2. PVC Pipe:
      (a) Fitting shall consist of a PVC hub, rubber sleeve and stainless-steel band as manufactured by Inserta Tee®, GPK Products or approved equal.
      (b) Saddle fitting with an elastomeric ring gasketed bell-end service connection, a minimum wall thickness of SDR 26, a rubber sealing gasket, and with stainless steel straps for connection to the pipe.
B. Compression Fit Connection:
   1. The connection shall be specifically designed for connection to the sewer main being installed.
   2. Service connection shall consist of a PVC hub, rubber sleeve and stainless steel band. Rubber sleeve and gasket shall meet the requirements of ASTM F 477. Gaskets shall be installed by the manufacturer. The water-based solution provided by the manufacturer shall be used during assembly. Do not use pipe lube.
   3. Connection shall be Inserta Tee as manufactured by Inserta Fittings Co. or approved equal.
C. Non-Shear Flexible Coupling:
   1. Connections to existing service laterals shall be made using Non-Shear flexible couplings.
   2. All flexible couplings shall conform to ASTM C1173 and shall be as manufactured by Fernco Inc., MaxAdaptor or approved equal.

PART 3 - EXECUTION

3.01 INSTALLATION PROCEDURE

A. The Contractor shall submit, in detail, the procedure and the steps to be followed for the installation of the pipe bursting system selected, including location of insertion and launching pits, even if the process is named in the specification. All such instructions and procedures submitted shall be carefully followed during installation. Any proposed changes in installation procedures shall require submittal of revised procedures and acceptance by the City.

3.02 PIT LOCATIONS

A. Location and number of insertion or launching pits will be chosen by the Contractor and will typically be located near existing or proposed manholes, P.I.'s in the line, at logical breaks in the construction phasing, or at locations to comply with access or maintenance requirements.

3.03 EQUIPMENT

A. The Contractor shall utilize pipe bursting equipment with adequate pulling/pushing force to complete pulls in a timely manner. The Contractor shall provide equipment on the pulling mechanism to verify the pulling/pushing force exerted on the pipe does not exceed the manufacturer's recommendation for allowable pulling force to prevent damage to the pipe. Where the actual pulling force exceeds the allowable pulling force the Contractor shall take steps to reduce the pulling force necessary by either oversizing the cut or lubricating the outside pipe surface.

3.04 MINIMIZE NOISE IMPACTS

A. Means and methods should be employed and described in appropriate submittals to ensure that work of a high decibel volume is performed away from business and/or residential properties to the best extent possible. Such description shall include times and durations that are compatible with the neighborhood in which the work is being performed. No such work will be performed in the late afternoon, early evening or weekends unless described, submitted and approved in advance on projects that work outside of usual and customary hours has been previously approved.

B. Provide silencers or other approved devices to reduce machine noise, when it exceeds regulated limits.

3.05 PROTECTION

A. The Contractor shall provide protection for the general safety of workers, pedestrians and traveling public throughout this project. Existing surface improvements and underground facilities and utilities shall be the contractor's responsibility to protect and/or support. Damage caused by the Contractor shall be repaired at no expense to the City. Protection to be provided includes, but is not limited to:

1. Barricades, warning lights and signs for excavations.
2. The Contractor shall install all pulleys, rollers, bumpers, alignment control devices and other equipment to protect existing manholes, and to protect the pipe from damage during installation. Lubrication may be used as recommended by the manufacturer. Under no circumstances shall the pipes be stressed beyond their elastic limit.
3. Do not allow sand, debris, or runoff to enter sewer system.

4. Verify location of all underground utilities and facilities potentially impacted by rehabilitation or other activities and take necessary precautions to provide protection from damage. Damage caused by Contractor shall be Contractor's responsibility and repaired at Contractor's own expense, and at no additional cost to the City.
5. Protect the new pipe and components during all phases of work, including hauling, installation, entry into the launching pit, and prevention of scarring or gouging of the pipe or components.

3.06 TELEVISION INSPECTION

A. The Contractor shall video (CCTV) inspect the sewer pipe, in accordance with Section 02686 – Cleaning and Assessment of Gravity Lines.
B. Preconstruction Television Inspection: Pipe shall be inspected immediately prior to pipe bursting to verify the existing pipe conditions are acceptable for pipe bursting and to locate and verify all active service line connections. If existing pipe conditions are not acceptable for pipe bursting, contact the City. If there is a sag in the existing line, see paragraph SAGS IN LINE below.
C. Post-Construction Television Inspection: Contractor shall inspect the pipe after pipe bursting to locate and verify that all active service line connections were re-established.
D. Preconstruction and Post-Construction Television Inspection documentation shall be submitted for review and acceptance of the Work.

3.07 SEWAGE BYPASS

A. When required for acceptable completion of pipe bursting, the Contractor shall provide for continuous sewage flow around the section(s) of pipe designated for the installation of replacement pipe. The pump and bypass lines shall be of adequate size and capacity to handle the flow.

3.08 SAGS IN LINE

A. If the Pre-Inspection CCTV reveals an unidentified sag in the existing sewer, the Contractor shall inform the City and request direction. The City may require the Contractor to eliminate the sag and install new pipe at a uniform grade prior to pipe bursting the remaining portion of the pipe segment. If the sag has been identified in the Contract Documents, the Contractor shall address the sag as directed in the Contract Documents prior to pipe bursting.
B. If Post-installation video (CCTV) inspection reveals a sag in the new line where none existed prior to the Work being performed, the Contractor shall remove or repair the sag at no additional cost to the City.

3.09 SERVICE LATERALS AND CONNECTIONS

A. Existing service connections shall be located and exposed before initiating sewer main replacement operations. All service laterals attached to the existing sewer shall be completely disconnected and isolated from the existing sewer before the pipe bursting operations. Service laterals shall not be reconnected to the new sewer line until the new line is installed. Any services remaining off line for more than 12 hours, or any connections deemed necessary by the City to protect the customer, shall be bypass pumped until such time that they can be reconnected.
B. Reconnection of service laterals to the installed pipe shall be accomplished using an approved method.

3.10 PIPE JOINING

A. HDPE Pipe:

1. The HDPE pipe shall be assembled and joined at the site using the butt-fusion method conforming to ASTM D2657 to provide a leak proof joint. All equipment and procedures used shall be used in strict compliance with the manufacturer's recommendations. Fusing shall be accomplished by personnel certified as fusion technicians by a manufacturer of HDPE pipe and/or fusing equipment.
2. The butt-fused joint shall be in true alignment and shall have uniform roll-back beads resulting from the use of proper temperature and pressure. The joint shall be allowed adequate cooling time before removal of pressure. The fused joint shall be watertight and shall have tensile strength equal to or greater than that of the pipe.
3. All internal beads shall be removed after the cooling time using a suitable bead removal tool. Use of the bead removal tool shall not induce any slits, gouges or defects in the pipe wall. The beads shall be bent back at several positions. No evidence of the bead splitting shall be seen. If the bead is seen to split at any point, then the joint shall be cut from the pipeline and remade. If a similar defect recurs, all further production jointing shall cease until the equipment has been thoroughly cleaned and examined. New trial joints shall be made and shown to be satisfactory.
4. All defective joints shall be cut out and replaced at no additional cost to the City. All joints shall be subject to acceptance by the City and/or his representative prior to insertion. Any section of the pipe with a gash, blister, abrasion, nick, scar, or other deleterious fault greater in depth than ten percent (10%) of the wall thickness, shall not be used and must be removed from the site. However, a defective area of the pipe may be cut out and joint fused in accordance with the procedures stated above. In addition, any section of the pipe having other defects such as concentrated ridges, discoloration, excessive spot roughness, pitting, variable wall thickness or any other defect of manufacturing or handling as determined by the City and/or his representative shall be discarded and not used.
5. The wall color of the interior pipe surfaces shall be light green or other color approved by the City so that a clear detail examination with CCTV inspection equipment may be made. Product data indicating the interior color to be used shall be submitted for review and approval.

B. PVC Pipe:

1. PVC shall be joined and assembled as recommended by the manufacturer of the pipe.

C. Where excavations for the insertion of the replacement pipe are made between two manholes, the ends of the pipe will be cut smooth and square to the axis of the pipe so that it can be joined in a manner such that the gap between pipe ends does not exceed one-half (1/2) inch. A Fernco coupling or a full circle repair clamp with a minimum width of 12 inches (Smith-Blair or approved equal) shall be used. The butt-fusion method of pipe joining may be used as well for HDPE pipe.

3.11 HDPE PIPE RELAXATION AND COOLING

A. The installed pipe shall be allowed the manufacturer's recommended amount of time, but not less than four (4) hours, for cooling and relaxation due to tensile stressing prior to any reconnection of any service lines, sealing of the annulus or backfilling of

the insertion pit. Four (4) inches to eight (8) inches of excess length of new pipe shall be allowed to protrude into the manhole.

3.12 MANHOLE SEALING

A. Existing Manholes:
   1. A manhole adapter shall be placed circumferentially on the replacement pipe and encased with a non-shrink grout to prevent infiltration into the manhole.
   2. The manhole adapter shall be installed in accordance with manufacturer's recommendations.
   3. Non-shrink grout shall be installed in accordance with Section 03370 – Sewer Manhole Construction.

B. New Manholes:
   1. Where new manholes are installed in conjunction with pipe bursting, the manhole shall be sealed in accordance with Section 03370 – Sanitary Sewer Manhole Construction.

3.13 FIELD QUALITY CONTROL

A. Prior to service line reinstatement, all pipelines shall be tested in accordance with Section 02702 – Testing Requirements for Sanitary Sewer: Mains and Manholes.

B. If air testing is not possible, the Contractor shall notify the City for further direction.

END OF SECTION

SECTION 02605 – DRAINAGE STRUCTURES

PART 1 - GENERAL

1.01 SUMMARY

A. This section covers the furnishing of all labor, materials and equipment required to install drainage structures, frames and covers, access hatches and all appurtenances as shown on the Drawings and as specified herein. All materials and construction shall be in compliance with the latest revision of the standards referenced in this section and Section 2600 of the "KCMO Standard Drawings and Specifications", except as amended herein.

1.02 SPECIFICATION MODIFICATIONS

A. It is understood that throughout this section these Specifications may be modified by appropriate items in Section 01015 – Specific Project Requirements, or as otherwise indicated in the Contract Documents.

1.03 RELATED SECTIONS

A. Section 01000 – General Project Requirements.
B. Section 01015 – Specific Project Requirements.
C. Section 02200 – Earthwork.
D. Section 02702 – Testing Requirements for Sanitary Sewer: Mains and Manholes.
E. Section 02940 – GSI Inlets.
F. Section 02955 – GSI Outlets.
G. Section 03000 – Miscellaneous Concrete.
H. Section 03370 – Sanitary Sewer Manhole Construction.
I. Section 05011 – Stormwater Castings.

1.04 CODES AND STANDARDS

A. The publications listed below form a part of this specification to the extent referenced. The publications are referred to within the text by the basic designation only

B. American Concrete Institute (ACI):

ACI 350	Code Requirements for Environmental Engineering Concrete Structures.
ACI 350-06	Code Requirements for Environmental Engineering Concrete Structures and Commentary.
ACI 350.5-12	Specifications for Environmental Concrete Structure.

C. American Society for Testing and Materials (ASTM):

ASTM A48	Standard Specification for Gray Iron Castings.
ASTM C150	Standard Specification for Portland Cement.
ASTM C443	Standard Specification for Joints for Circular Concrete Sewer and Culvert Pipe, Using Rubber Gaskets.
ASTM C478	Standard Specification for Precast Reinforced Concrete Manhole Sections.

ASTM C990	Standard Specification for Joints for Concrete Pipe, Manholes and Precast Box Sections Using Preformed Flexible Joint Sealant.

1.05 INFORMATION PROVIDED BY THE CITY

A. As provided in the Contract Documents.

1.06 SUBMITTALS

A. Submit as specified in Section 01300 – Submittals.
B. Shop Drawings:
   1. Base sections, riser sections, eccentric conical top sections, flat slab tops, grade rings, including a certificate indicating compliance with ASTM C478.
   2. Pipe connections to precast concrete elements.
   3. Manhole frame and cover with certification of compliance with the specified ASTM standard and Class designation.
   4. Method of repair for minor damage to precast concrete sections.
C. Product Data:
   1. Precast concrete sections:
      (a) Sectional plan(s) and elevations showing dimensions and reinforcing steel placement.
      (b) Concrete design mix.
      (c) Structural Calculations, including assumptions.
      (d) Structural design calculations and fabrication drawings shall be prepared and stamped by a professional engineer registered in the State of Missouri.
   2. Non-Precast Concrete Drainage Structures including but not limited to FRP, Plastic, or approved equal
D. Test Reports:
   1. Precast concrete boxes:
      (a) Concrete test cylinder reports from an approved testing laboratory certifying conformance with this Item.
   2. Results of leakage tests.

1.07 QUALITY ASSURANCE

A. The Contractor is responsible for the quality assurance and quality control of the Work.
B. All material shall be new and unused.
C. Materials' quality, manufacturing process and finished sections are subject to inspection and approval by the City/Design Professional. Inspection may be made at place of manufacture, at the work site following delivery, or both.
D. Materials will be examined for compliance with this Section and approved manufacturer's drawings.
E. Materials shall be rejected for failure to meet any requirements specified herein. Rejection may occur at place of manufacture, at work site, or following installation. Mark for identification rejected materials and remove from work site immediately. Rejected materials shall be replaced at no additional cost to Owner.
F. Repair minor damage to precast concrete sections by a submitted and approved method, if repair is authorized by the City/Design Professional.

1.08 PRODUCT DELIVERY, STORAGE AND HANDLING

A. Handle materials and other accessories in such manner as to ensure delivery to the installation location in a sound undamaged condition.

B. Non-shrink grout: Deliver Materials to the project in manufacturer's original, unopened packaging, with labels clearly identifying product name, manufacturer, and expiration date. Store grout in a cool, dry place and out of the sun.
C. Precast concrete sections shall not be delivered to the job until the concrete control test cylinders have attained strength of at least 80 percent of the specified minimum.
D. Precast concrete sections shall be handled carefully and shall not be bumped or dropped. Hooks shall not be permitted to come in contact with joint sections.
E. Precast concrete sections shall be inspected when delivered. All cracked or otherwise visibly defective units will be rejected. City reserves the right to inspect the production of the units at the manufacturing plant.

PART 2 - PRODUCTS

2.01 GENERAL

A. Reference to a manufacturer's name and model or catalog number is for the purpose of establishing the standard of quality and general configuration desired.
B. Like items of materials/equipment shall be the end products of one manufacturer in order to provide standardization for appearance, operation, maintenance, spare parts and manufacturer's service.
C. Provide lifting lugs or holes in each precast section for proper handling.
D. Cement shall conform to ASTM C150, Type II cement or equal.
E. Concrete Materials (acceptable mixes, MCIB, KCMMB).
F. Precast concrete sections shall be properly cured prior to shipping. Precast concrete sections shall not be shipped before concrete has attained a compressive strength of 3200 psi or 80% of design strength minimum.
G. Mark date of manufacture, name and trademark of manufacturer on the inside of each precast section.

2.02 DESIGN CRITERIA

A. Precast concrete:
   1. Minimum compressive strength shall be 4000 psi at 28 days.
   2. Maximum water-to-cement ratio shall be 0.45 by weight.
   3. Minimum cement content shall be 564 lbs. of cement per cubic yard of concrete.
   4. For Precast Manhole Sections, design precast concrete base and flat slab top for their own weight, weight of soil at 130 pcf, and a live load equal to AASHTO H-25 truck loading applied at finished grade.
B. Design of Manufactured products (Precast Concrete or approved equal):
   1. Analyze walls and slabs using accepted engineering principals. Design walls for internal fluid pressures and external soil pressures independently.
   2. When “fy” exceeds 60,000 psi, “z” (per ACI 350-01, Chapter 10) shall not exceed 95 kips/in, and “fs” shall be computed and shall not exceed 50 percent of “fy”.
   3. Design products to support their own weight, weight of soil at 130 pcf, and a live load equal to AASHTO HS-25 truck loading applied to top slab.
   4. Design walls of the precast boxes for the governing case from the following load conditions:
      (a) An external lateral pressure based on an equivalent fluid with a unit weight of 90 pounds per cubic foot (pcf). Originate the pressure diagram at the finished ground surface or top of pavement surface, as applicable. When designing by the Strength Design Method, environmental durability factors,

as defined in ACI 350-01, need not be included for this load condition. When designing by the Alternate Design Method (Service Loads), allowable stresses may be increased by one-third for this load condition.

(b) An external lateral pressure based on an equivalent fluid with a unit weight of 60 pcf. Include a live load surcharge pressure equal to 2 feet of earth above the finished ground surface or top of pavement surface, as applicable.

(c) An internal lateral pressure based on a fluid with a unit weight of 63 pcf. Assume internal fluid to the bottom surface of the top slab, unless otherwise noted or shown. Design of walls shall account for effects of tension due to internal fluid pressure.

5. Locate access openings, wall sleeves and pipe penetrations as shown on Drawings or as recommended by manufacturer and approved by Design Professional.
6. Locate horizontal wall joints 8-in minimum from edge of wall openings unless otherwise approved by the City/Design Professional.
7. Consider discontinuities in structure produced by openings and joints. Provide additional reinforcing around openings. Frame openings to carry full design loads to support walls.

2.03 PRECAST CONCRETE MANHOLE SECTIONS

A. Precast manholes shall be in accordance with City Standards (https://www.kcmo.gov/city-hall/departments/public-works/standard-drawings), except as modified herein.

B. Precast concrete base sections, riser sections, transition top sections, flat slab tops and grade rings shall conform to ASTM C478 and shall meet the following requirements or the KCMO City Standards whichever is more stringent:

1. Bottom slab thickness shall be no less than the riser wall thickness.
2. Construct precast concrete bases as shown on the Drawings.
3. Base, riser and transition top sections shall have tongue and groove joints.
4. Top section shall be a flat slab where cover over top of pipe is 4-ft or less.
5. Provide integrally cast knock-out panels in precast concrete manhole sections at locations, and with sizes shown on Drawings. Knock-out panels shall have no steel reinforcing.

2.04 PRECAST CONCRETE BOX STRUCTURES

A. Precast concrete box structures shall conform to the requirements of ACI 350 and the following additional requirements:

1. Minimum reinforcing bar size shall be No. 5, and shall be Grade 60 or higher.
2. Maximum spacing of reinforcing bars shall be 12 inches, center to center.

B. Structural design calculations and fabrication drawings shall be prepared and stamped by a professional engineer registered in the State of Missouri.

2.05 PIPE CONNECTIONS

A. Connect pipe to precast structure using one of the following methods:

1. Grout in place - Precast section shall have a formed, tapered circular opening larger than the pipe outside diameter. Grout shall be non-shrink and waterproof equal to Hallemite, Waterplug or Embeco. Plastic pipe shall have a water stop gasket secured to pipe with a stainless steel clamp.
2. Flexible sleeve – An integrally cast sleeve in precast section or install sleeve in a formed or cored opening. Fasten pipe in sleeve with stainless steel clamp(s). Coat stainless steel clamp(s) with bituminous material to protect from corrosion.

Flexible sleeve shall be Lock Joint Flexible Manhole Sleeve; Kor-N-Seal connector; PSX Press-Seal Gasket or equal.

3. Compression gasket - Integrally cast compression gasket in precast manhole section. Insert pipe into compression gasket. Compression gasket shall be A-Lok or equal.

2.06 MANHOLE FRAME AND COVER

A. Manhole frames and covers shall be per Section 05011 – Stormwater Castings.

2.07 JOINTING PRECAST SECTIONS

A. Seal tongue and groove joints of precast sections with either rubber O-ring gasket or preformed flexible joint sealant. O-ring rubber gaskets shall conform to ASTM C443. Preformed flexible joint sealant shall conform to ASTM C990 and shall be Kent Seal No. 2 by Hamilton-Kent; Ram-Nek by K.T. Snyder Company or equal.

B. Completed joint shall withstand 15 psi internal water pressure without leakage or displacement of gasket or sealant.

PART 3 - EXECUTION

3.01 INSTALLATION

A. All Drainage Structures shall be provided, installed and constructed at the location shown on the Drawings.

B. Manhole and Precast Box Installation:

1. Manholes and precast boxes shall be constructed to the dimensions shown on the Drawings and as specified herein. Construct cast-in-place bases in accordance with the requirements of the contract documents and KCMO Standard details.
2. Place base on a bed of 8-in structural fill as shown on the Drawings. Set base grade so that a maximum grade adjustment of 8-in is required to bring the structure to final grade.
   (a) Use precast concrete grade rings to adjust manhole frame and cover to final grade.
3. Set precast concrete sections plumb with a 1/4-in maximum out of plumb tolerance allowed. Seal joints of precast sections with either a rubber O-ring set in a recess or preformed flexible joint sealant in sufficient quantity to fill 75 percent of the joint cavity. Fill the outside and inside joint with non-shrink mortar and finish flush with the adjoining surfaces. Caulk the inside of any leaking joints with lead wool or non-shrink grout to the satisfaction of the City/Design Professional.
4. Allow joints to set for 14 hours before backfilling, unless a shorter period is specifically approved by the City/Design Professional.
5. Plug holes in the concrete sections required for handling with a non-shrink grout or non-shrink grout in combination with concrete plugs. Finish flush on the inside.
6. Cut holes in precast sections to accommodate pipes prior to setting precast sections in place to prevent jarring that may loosen the mortar joints.
7. Backfill carefully and evenly around manholes and precast boxes.

C. Pipe Connections:

1. Construct pipe connections, including pipe stubs, as specified above in section 2.05. Close or seal pipe stubs for future connections with a gasketed watertight plug.

D. Setting Manhole Frame and Cover:
   1. Set manhole covers and frames in a full mortar bed. Utilize precast concrete grade rings, a maximum of 8-in thick, to assure frame and cover are set to the finished grade. Set manhole frame and cover to final grade prior to placement of permanent paving.

3.02 LEAKAGE TESTS

A. Test each liquid-containing structure for leakage. City/Design Professional shall observe each test. Perform exfiltration test as described below.
B. Assemble structure in place; fill and point all lifting holes and exterior joints within 6-ft of the ground surface with an approved non-shrinking mortar. Test prior to placing the shelf and invert and before filling and pointing the horizontal joints below 6-ft of depth. Lower ground water table below bottom of the structure for the duration of the test. Plug all pipes and other openings into the structure and brace to prevent blow out.
C. Fill structure with water to the top of the structure. If the excavation has not been backfilled and no water is observed moving down the surface of the structure, the structure is satisfactorily water-tight. If the test, as described above is unsatisfactory as determined by the City/Design Professional, or if the structure excavation has been backfilled, continue the test. A period of time may be permitted to allow for absorption. Following this period, refill structure to the top of the structure, if necessary and allow at least 8 hours to pass. At the end of the test period, refill the structure to the top of the structure again, measuring the volume of water added. Extrapolate the refill amount to a 24-hour leakage rate. The leakage for each structure shall not exceed one gallon per vertical foot for a 24-hour period. If the structure fails this requirement, but the leakage does not exceed three gallons per vertical foot per day, repairs by approved methods may be made as directed by the City/Design Professional. If leakage due to a defective section of joint exceeds three gallons per vertical foot per day, the structure shall be rejected. Uncover the rejected structure as necessary and to disassemble, reconstruct or replace it as directed by the City/Design Professional. Retest the structure and, if satisfactory, fill and point the interior joints.
D. No adjustment in the leakage allowance will be made for unknown causes such as leaking plugs, absorptions, etc. It will be assumed that all loss of water during the test is a result of leaks through the joints or through the concrete.
E. An infiltration test may be substituted for an exfiltration test if the ground water table is above the highest joint in the structure. If there is no leakage into the structure as determined by the City/Design Professional, the structure will be considered water-tight. If the City/Design Professional is not satisfied, testing shall be performed as previously described.
F. Regardless of whether leakage testing is required, visible leaks which occur after backfilling shall be sealed by approved means.

3.03 CLEANING

A. Thoroughly clean all new manholes, precast boxes and drainage structures of all silt, debris and foreign matter of any kind, prior to final inspections.

END OF SECTION

SECTION 02618 – DUCTILE IRON PIPE FOR WATER MAINS

PART 1 - GENERAL

1.01 SUMMARY

A. This section covers materials and installation of pipe, fittings and relevant appurtenances associated with the installation of ductile iron pipe water mains. This section applies to all water mains 54 inches in diameter and smaller. This section also applies when diameters larger than 54 inches is specified for the project.

B. This section also includes Shop Coatings, Linings, Bolts, Nuts, Polyethylene Encasement and other Protective Coatings.

1.02 SPECIFICATION MODIFICATIONS

A. It is understood that throughout this section these Specifications may be modified by appropriate items in Section 01015 – Specific Project Requirements or as otherwise indicated on the Contract Drawings.

1.03 RELATED SECTIONS

A. Section 01000 – General Project Requirements.
B. Section 01015 – Specific Project Requirements.
C. Section 01300 – Submittals.
D. Section 02200 – Earthwork.
E. Section 02250 – Trenching, Pipe Embedment and Backfill.
F. Section 02669 – Thrust Restraints.

1.04 CODES AND STANDARDS

A. The publications listed below form a part of this specification to the extent referenced. The publications are referred to within the text by the basic designation only.

B. American Society for Testing and Materials (ASTM):

ASTM A276	Standard Specification for Stainless Steel Bars and Shapes
ASTM A307	Standard Specification for Carbon Steel Bolts and Studs, 60,000 psi Tensile
ASTM D4976	Standard Specification for Polyethylene Tubing.

C. American National Standards Institute (ANSI):

ANSI/NSF61	Drinking Water Treatment Chemicals
ANSI B18.2.2	Nuts for General Applications: Machine Screw Nuts, Hex, Square, Hex Flange, and Coupling Nuts (Inch Series).

D. American Water Works Associations (AWWA):

AWWA C104/ANSI A21.4	Cement-Mortar Lining for Cast-Iron Pipe and Fittings
AWWA C105/ANSI A21.5	Polyethylene Encasement for Ductile Iron Piping
AWWA C110/ANSI A21.10	Gray-Iron and Ductile Iron Fittings
AWWA C111/ANSI A21.11	Rubber-Gasket Joints for Cast Iron and Ductile Iron Pressure Pipe and Fittings
AWWA C115/ANSI A21.15	Flanged Ductile-Iron Pipe with Ductile Iron or Gray Iron Thread
AWWA C150/ANSI A21.50	Standard for the Thickness Design of Ductile Iron Pipe
AWWA C151/ANSI A21.51	Ductile Iron Pipe Centrifugally Cast for Water
AWWA C153/ANSI A21.53	Ductile-Iron Compact Fittings, 3 in. through 24 in.

AWWA C203	Standards for Steel Pipe
AWWA C550	Protective Epoxy Interior Coatings for Valves and Hydrants
AWWA C600	Installation of Ductile Iron Water Mains and their Appurtenances.

E. International Organization for Standardization (ISO):

ISO 8179-1	Ductile Iron Pipes, Fitting, Accessories and their Joints – Zinc-Bases Coating – Part 1: Metallic Zinc with Finishing Layer.

1.05 INFORMATION PROVIDED BY THE CITY

A. As provided in the Contract Documents.

1.06 SUBMITTALS

A. Submit as specified in Section 01300 – Submittals.
B. Shop Drawings:
   1. Submit shop drawings and project data (laying schedule) for piping work showing pipe and fitting sizes, valve locations, joint details; and hydrant locations.
C. Product Data:
   1. Pipe Data. In accordance with paragraph QUALITY ASSURANCE.
   2. Test Data. In accordance with paragraph QUALITY ASSURANCE.
   3. Polyethylene Encasement.
   4. Push On Joints.
   5. Mechanical Joints.
   6. Flanged Joints.
   7. Appurtenances:
      (a) Tie rods.
      (b) Couplings.
   8. Interior Coatings.
   9. Exterior Coatings.
   10. Bolts and Nuts.
   11. Polyethylene Encasement.
D. Other Submittals:
   1. Manufacturer's Experience. In accordance with paragraph QUALITY ASSURANCE.

1.07 QUALITY ASSURANCE

A. Follow provisions of AWWA C600.
B. Manufacturer's Experience. The manufacturer shall be a company specializing in manufacturing the Products specified in this section with minimum three years documented experience. Submit manufacturer's experience in accordance with paragraph SUBMITTALS.
C. Mark rejected or defective materials and remove them from the work site.
D. The Contractor shall submit to the City written evidence of the following:
   1. Pipe Product Data. That the pipe furnished under this specification is in conformance with the material and mechanical requirements specified herein.
   2. Test Data. Certified copies of independent laboratory test results or mill test results from the pipe supplier may be considered evidence of compliance provided such tests are performed in accordance with the appropriate ASTM or AWWA testing standards by experienced, competent personnel. Pipe manufacturer's test results shall be stamped by a licensed Professional Engineer (PE) employed by the pipe manufacturer. In case of doubt

as to the accuracy or adequacy of mill tests, the City may require that the Contractor furnish test reports from an independent testing laboratory on samples of pipe materials.

E. The City will inspect all pipe, fittings, and accessories delivered to the site for damage, cleanliness, and conformance to the specifications. No damaged, broken, cracked, deformed, mishandled, imperfectly coated, defective pipe or fittings shall be used. At the sole discretion of the City and at no additional cost to the City, items that are not acceptable shall either be repaired or completely removed from the site.

1.08 PRODUCT DELIVERY, STORAGE AND HANDLING

A. Follow the provisions for the delivery, storage, protection and handling products to and at site provided in Section 01000 – General Project Requirements, paragraph PRODUCT DELIVERY, STORAGE AND HANDLING.

B. Pipe, fittings, and accessories shall be handled in a manner that will ensure installation in a sound, undamaged condition. Equipment, tools, and methods used in unloading, reloading, hauling, and laying pipe and fittings shall be such that the pipe, pipe coating, and fittings are not damaged. Hooks shall not be used.

C. Under no circumstances shall pipe or accessories be dropped or dumped.

D. Pipe and fittings shall not be moved by inserting anything into pipe ends.

E. Pipe and fittings on which the cement lining has been broken or loosened shall be replaced at no additional cost to the City.

F. Where the damaged areas are small and readily accessible, the lining may be permitted to be repaired in accordance with AWWA C104 at no additional cost to the City.

1.09 ADDITIONAL COMPLIANCE SUBMITTALS

A. Additional requirements for compliance submittals will be found in Section 01015 – Specific Project Requirements.

PART 2 - PRODUCTS

2.01 DUCTILE IRON PIPE

A. Ductile iron pipe shall be designed and manufactured in accordance with AWWA C151/A21.51.

B. All pipe shall be manufactured from at least 90% recycled ferrous scrap material.

C. Pipe Thickness:

1. Pipe thickness shall be in accordance with AWWA C150/ANSI A21.50. The following minimum thickness shall apply:
   (a) Pipe 4 inches through 12 inches in diameter: Class 52.
   (b) Pipe 16 inches through 54 inches diameter: Class 54.
2. Pipe thickness classifications shall be as noted on the Drawings.

D. Exterior Coating:

1. The exterior of ductile iron pipe (not including fittings) shall be coated with a layer of arc-sprayed zinc conforming to ISO 8179-1.
2. The mass of the zinc applied shall be 200 g/m^2 of pipe surface area.
3. A finishing layer topcoat shall be applied to the zinc.
4. The mean dry film thickness of the finishing layer shall not be less than 3 mils with a local minimum not less than 2 mils.
5. The manufacturer shall clearly mark the outside of each pipe indicating the pipe has been coated in accordance with these specifications.

E. Interior Coating/Lining:
   1. All pipe shall be cement mortar lined in accordance with AWWA C104/ANSI A21.4.
   2. Pipe cement-mortar lining shall be without an asphaltic interior seal coating.

2.02 PUSH ON JOINTS

A. Pipe joints shall be of the push-on type unless otherwise specified or as shown on the Drawings.
B. Joints shall conform to ANSI/AWWA C111/A21.11.
C. Gaskets shall be neoprene or synthetic rubber. Gaskets shall be certified as suitable for chlorinated potable water in accordance with ANSI/NSF61. Natural rubber will not be acceptable.
D. Restrained Joints. See Section 02669 – Thrust Restraints.

2.03 TESTING

A. All pipe shall be tested and documented per AWWA C151 and paragraph 1.07 D.2 defined herein.
B. All pipe 30” and larger shall also be hydrostatically tested to 75% of the yield strength of the metal based on the nominal thickness of the pipe.

2.04 FITTINGS

A. All fittings shall be made of Ductile Iron and manufactured according to AWWA C110/ANSI A21.10 or AWWA C153/ANSI A21.53.
B. Fitting joints shall be Mechanical Joint (MJ), Flange Joint (FLG), or Push-On Joint, per AWWA C111/ANSI A21.11. All MJ glands shall be ductile iron. Fittings shall have distinctly cast upon them, the pressure rating and the letters “DI” or “Ductile”. FLG Fittings shall be used only for aboveground installations.
C. Welded-on outlets may not be used in lieu of tees.
D. Flanged Joints: Shall be provided with full-face gaskets and shall meet the requirements of AWWA C115/ANSI A21.15.
E. The exterior of fittings shall be coated with a layer of arc-sprayed zinc conforming to ISO 8179-1 or a zinc-rich primer conforming to ISO 8179-2. A finishing layer topcoat shall be applied to the zinc.
F. Interior coating/lining shall be cement in accordance with ANSI/AWWA C104/A21.4, with double cement lining.
G. As an alternative for interior/exterior coatings on fittings, the manufacturer may use a fusion bonded epoxy that is NSF 61 approved for potable water use and compiles with AWWA C550.

2.05 GLANDS AND OTHER APPURTENANCES

A. All glands shall have a polyester triglycidyl isocyanurate (TGIC) powder coating or an approved equal applied for corrosion protection. See also Section 02669 – Thrust Restraints.
B. Tie Rods shall be ASTM A276, Type 304 or Type 316 Stainless Steel.
C. Couplings (when approved for use by the Water Services Department) shall be:
   1. Dresser “Style 38”.
   2. Smith-Blair “441 or 411 Flexible Coupling”; without pipe stop.
   3. Bolted compression type couplings shall be manufactured of epoxy coated steel or ductile iron specifically for use with ductile iron pipe.

2.06 TEE-BOLTS AND NUTS

A. Tee-Bolts shall be manufactured with high-strength, low-alloy steel in accordance with AWWA C111 and ASTM A307, with chamfered or rounded ends projecting 1/4 to 1/2 inch from surface.
B. Nuts shall be hexagonal manufactured in accordance with ASTM A307 and ANSI B18.2.2.
C. Provide ceramic-filled, baked-on, fluorocarbon resin coating for tee-bolts and nuts.
D. Include factory-applied lubricant that produces a low coefficient of friction for the ease of installation.

2.07 MARKINGS

A. Markings shall be legibly cast in the pipe or painted thereon with waterproof paint.

2.08 POLYETHYLENE ENCASEMENT

A. Polyethylene encasement materials shall be in accordance with ASTM D4976 and AWWA C105/ANSI A21.5.
B. The Contractor may use either Linear Low Density (LLD), High Density Cross Laminated (HDCL) or V-Bio® Enhanced Polyethylene film with the minimum properties indicated in Table 1 below:

Table 1. Minimum Requirements for Polyethylene Encasement

Item	LLD	HDCL	V-Bio®
Thickness, mil	12	4	8
Tensile Strength, psi	4,400	6,300	3,600
Elongation, percent	1,000	100	700
Dielectric Strength, v/mil	1,900	800	800
Tear Resistance, gf	4,400	250	2,550
Impact Resistance, g	1,100	800	600

C. Polyethylene encasement shall be provided in tubes. Sheeting is not allowed. The minimum tube size for each pipe diameter shall be in accordance with Table 2.

Table 2. Polyethylene Flat Tube Width (inches)

Nominal Pipe Diameter (inches)	Push-on Bell & Spigot Joints	Mechanical Joints
4	14	16
6	17	20
8	21	24
10	25	27
12	29	30
14	33	34

Table 2. Polyethylene Flat Tube Width (inches)

Nominal Pipe Diameter (inches)	Push-on Bell & Spigot Joints	Mechanical Joints
16	37	37
18	41	41
20	45	45
24	53	53
30	67	67
36	81	81
42	81	81
48	95	95
54	108	108

D. Color: The color of polyethylene encasement shall be blue.
E. Adhesive Tape: Adhesive tape shall be a general purpose adhesive tape 1-inch wide and approximately 8 mils thick, such as Scotch Tape No. 50, Polyken No. 900, Tape coat CT or approved equal (duct tape is not allowed).
F. Sheeting is permitted for use on point repairs under 12 foot in length. All point repairs 12 foot and longer shall use tubing.

PART 3 - EXECUTION

3.01 INSPECTION

A. Pipe and fittings shall be carefully examined for cracks and other defects immediately before installation.
B. Spigot ends shall be examined with particular care since they are vulnerable to damage from handling.
C. All defective, damaged, or unsound pipe or fittings shall be rejected and marked as such and removed from the Site.

3.02 PREPARATION

A. Cutting Pipe:
   1. Cutting shall be done in a neat manner without damage to the pipe or the cement lining. Cuts shall be smooth, straight, and at right angles to the pipe axis.
   2. After cutting, the end of the pipe shall be dressed with a file to remove all roughness and sharp corners.
   3. Cutting of pipe with a torch will not be permitted.
B. Cleaning:
   1. The interior of all pipe and fittings shall be thoroughly cleaned of foreign matter before being installed and shall be kept clean until the work has been accepted.
   2. Surfaces shall be wire brushed, if necessary, wiped clean, and kept clean until jointing is completed.

3.03 LAYING PIPE

A. Runs intended to be straight shall be laid straight.

B. Deflections from a straight line or grade shall not exceed the maximum joint deflections for full length pipe as stipulated in AWWA C600. Shorter pipe sections or special bends shall be installed where the alignment or grade requires them.
C. Pipe shall be protected from lateral displacement by pipe embedment material installed as specified in Section 02250 – Trenching, Pipe Embedment and Backfill.
D. Under no circumstances shall the pipe be laid in water; and no pipe shall be laid in unsuitable trench conditions.
E. Pipe shall be laid with the bell ends facing the direction of laying except when reverse laying is specifically authorized by the City.
F. Whenever pipe laying is stopped, the open end of the line shall be sealed with a watertight plug that will prevent water and other debris from entering the pipe.
G. No pipe length less than 18 inches in length shall be used.

3.04 MECHANICAL JOINTS

A. After proper joint cleaning, the gasket and gland shall be in position on the spigot before shoving the pipe to its final position. Center the entering spigot so that the gland or follower ring is parallel to the face of the connecting bell.
B. Joint shall be shoved "home" and the gland properly positioned with respect to the connecting bell with the connecting pipes in as nearly perfect alignment as practicable.
C. The bolts shall be slightly and uniformly tightened.
D. Deflection may be made after the bolts are tightened.
E. Coat the gasket with a lubricant (suitable for potable water) supplied by the pipe manufacturer and all surfaces of the bell, spigot, and gland that will come in contact with the gasket at any time during assembly.
F. Gasket shall be carefully pushed into position and evenly seated in the bell. The gland shall be shoved into place against the gasket, the bolts inserted, and the nuts tightened with the fingers until snug. Final tightening of the bolts shall be done with a ratchet torque wrench.
G. Partially tighten the bottom bolt, then the top bolts, alternately either side, and finally the remaining bolts, alternately tightening bolts 180 degrees apart. This cycle is then to be repeated until all bolts are tightened to the torque specified by the manufacturer:

5/8” bolts --- 40 to 60-foot pounds
3/4” bolts --- 60 to 90-foot pounds

H. If sealing is not maintained at the torque specified, the joint shall be disassembled, thoroughly cleaned, and reassembled. Overstressing of bolts to compensate for poor installation practice will not be permitted.

3.05 PUSH-ON JOINTS

A. Wipe the gasket seat clean with a cloth and position in place. Coat the gasket with a lubricant supplied by the pipe manufacturer. Apply to all of the inner surface of the gasket that will come into contact with the entering pipe.
B. Clean the plain end of the pipe and apply a thin film of lubricant (suitable for potable water) to the outside of the plain end of the pipe and its beveled edge. Align the plain end of the pipe with the bell of the pipe to which it is to be joined. The joint deflection angle should not exceed the recommended maximum of the manufacturer.
C. Bring the plain end of the pipe in contact with the gasket and exert sufficient force on the entering pipe so that its plain end compresses the gasket and makes contact with the base of the socket of the bell. This force can be applied by means of a jack type tool, backhoe, or other methods approved by KC Water.

3.06 FLANGED JOINTS

A. When bolting, care shall be taken to provide uniform gasket compression and prevent unnecessary stress on the flanges. Flange shall be free to move in any direction while the flange bolts are being tightened. Bolts shall be tightened gradually and at a uniform rate to provide uniform gasket compression.
B. Use full-face gaskets only.

3.07 RESTRAINED JOINTS

A. Restrained joints shall be installed in accordance with the pipe manufacturer's recommendations.
B. All joints within utility casings shall be restrained joints.

3.08 POLYETHYLENE ENCASEMENT

A. Polyethylene encasement shall be installed on all ductile iron pipe, fittings and appurtenances. The polyethylene shall be installed in a manner to prevent contact between the pipe, fittings, and the surrounding embedment.
B. The polyethylene encasement shall be installed as shown on the Construction Detail No. 02618-1 and as follows:
    1. Polyethylene encasement tubing shall be approximately two (2) feet longer than the length of the pipe section to provide a one (1) foot of overlap on each adjacent pipe section.
    2. Repair rips, punctures, or other damages to the polyethylene encasement with adhesive tape or with a short length of polyethylene tube cut open, wrapped around the pipe, and secured with adhesive tape as directed by the City.
C. Bolted Connections: All bolted connection shall by protected by 2 layers of polyethylene encasement. A minimum of 6 inches of overlap is required on each side of the connection.
D. Pipe-Shaped Appurtenances: Bends, reducers, offsets, and other pipe-shaped appurtenances shall be covered with polyethylene in the same manner as the pipe.
E. Odd-Shaped Appurtenances:
    1. Valves, tees, crosses, and other odd-shaped pieces that cannot practically be wrapped in a tube shall be wrapped with a flat sheet or split length of polyethylene encasement tube.
    2. The sheet shall be passed under the appurtenance and brought up around the body.
    3. Seams shall be made by bringing the edges together, folding over twice, and taping down.
    4. Tape polyethylene encasement securely in place at overlaps, valve tops and all other penetrations.
F. Lifting devices shall not be placed over polyethylene.
G. Polyethylene shall be protected from exposure to weather or damage at all times.
H. Openings in Encasement:
    1. Openings for branches, blow-offs, air valves, and similar appurtenances shall be made by making an x-shaped cut in the polyethylene and temporarily folding the film back.
    2. After the appurtenance is installed, tape the slack securely to the appurtenance and repair the cut as well as any other damaged areas in the polyethylene with tape.
    3. The new appurtenance shall be wrapped.
I. Junctions between Wrapped and Unwrapped Pipe:
    1. Where polyethylene wrapped pipe joins an existing pipe which is not wrapped, extend the polyethylene tube to cover the unwrapped pipe a distance of at least three feet.
    2. Secure the end with three circumferential turns of tape.

J. Service Taps:
   1. Wrap 3 layers of adhesive tape over the polyethylene encasement, covering the area where the tapping machine will be mounted.
   2. Mount the machine over the tape.
   3. Make the tap and install the corporation stop through the tape and polyethylene encasement.
   4. After making the service connection, inspect the polyethylene and repair damaged areas with tape.

DETAIL 02618-1 ON NEXT PAGE

DETAIL 02618-1

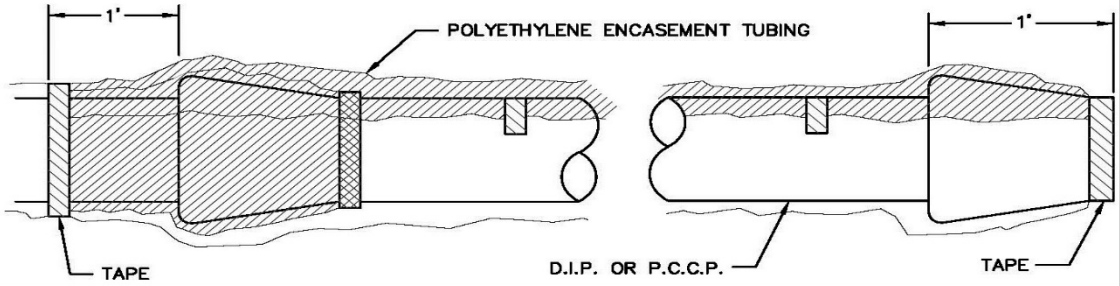

NOTES:

1. TAPE IN ACCORDANCE WITH AWWA C105

POLYETHYLENE ENCASEMENT
FOR BURIED PIPE

WATER SERVICES
CITY OF KANSAS CITY, MISSOURI
DRAWING NO. 02618-1

DEVELOPED BY: TECHNICAL ADVISORY COMMITTEE
APPROVED BY:
DATE: 12/02/2020

1 OF 1

END OF SECTION

SECTION 02619 – PRESTRESSED CONCRETE CYLINDER PIPE

PART 1 - GENERAL

1.01 SUMMARY

A. This Section provides for prestressed concrete cylinder pipe, fittings, specials, bolts, gaskets, and appurtenances for pipes 16 through 144-inches in diameter.

B. This section includes Materials, Design of Pipe, Joints, Closure Assemblies, Test Plugs, Fittings and Specials, Pipe Marking, Exposed Metal Surfaces, Testing

1.02 SPECIFICATION MODIFICATIONS

A. It is understood that throughout this section these Specifications may be modified by appropriate items in Section 01015 – Specific Project Requirements, or as otherwise indicated on the Contract Drawings.

1.03 RELATED SECTIONS

A. Section 02200 – Excavation and Trenching

B. Section 02618 – Ductile Iron Pipe Water Main

C. Section 02675 – Water Man Testing, Disinfection and De-chlorination

1.04 CODES AND STANDARDS

A. The publications listed below form a part of this specification to the extent referenced. The publications are referred to within the text by the basic designation only.

B. American Society for Testing and Materials (ASTM):

ASTM A307	Carbon Steel Bolts and Studs, 60,000 psi Tensile Strength
ASTM A648	Specification for Steel Wire, Hard Drawn for Prestressing Concrete Pipe
ASTM C33	Specification for Concrete Aggregates
ASTM C150	Specification for Portland Cement
ASTM C454	Practice for Disintegration of Carbon Refractories for Alkali
ASTM D1248	Polyethylene Plastics Molding and Extrusion Materials

C. American Water Works Association (AWWA):

AWWA C105	Polyethylene Encasement for Ductile-Iron Pipe Systems
AWWA C207	Steel Pipe Flanges for Waterworks Service, Sizes 4 Inch Through 144 Inch
AWWA C300	Reinforced Concrete Pressure Pipe, Steel Cylinder Type
AWWA C301	Prestressed Concrete Pressure Pipe, Steel Cylinder Type
AWWA C303	Concrete Pressure Pipe, Bar-Wrapped Steel Cylinder Type
AWWA C304	Design of Prestressed Concrete Cylinder Pipe
AWWA M9	Manual of Water Supply Practices, Concrete Pressure Pipe

D. American National Standards Institute (ANSI):

ANSI B16.1	Cast Iron Pipe Flanges and Flanged Fittings, Class 25, 125, 250 and 800

ANSI B16.21 Nonmetallic Flat Gaskets for Pipe Flanges

E. The Society for Protective Coatings (SSPC):
SSPC SP5 White Metal Blast Cleaning

1.05 DEFINITIONS

A. Not used

1.06 PROVIDED BY CITY

A. Not used

1.07 SUBMITTALS

A. Submit as specified in Section 01300 – Submittals
B. Shop Drawings
1. Submit the following for acceptance prior to fabrication:
(a) Pipe and joint details.
(b) Special, fitting, and coupling details.
(c) Laying and installation schedule with a pipe elevation for each pipe joint.
(d) Specifications, data sheets, and affidavits of compliance for protective shop coatings and linings.
(e) Pipe manufacturer's design calculations: In accordance with paragraph PIPE DESIGN REQUIREMENTS.
(f) Provide one copy of the pipe manufacturer's video illustrating the installation of the pipe.
C. Product Data
1. Certificates and Affidavits: Submit the following for acceptance prior to shipment:
(a) Affidavit of compliance with applicable standards
(b) Certificate of origin for all steel flanges.
(c) Test certificates.
(d) Certification from gasket manufacturer that the gasket materials are compatible with the joints specified herein and are recommended for the specified field test pressure and for potable water service. Gaskets shall be certified as suitable for potable water that has been treated with chlorine or chloramines. Natural rubber will not be accepted.
(e) Certification of joint lubricant suitable for use in potable water piping.
(f) Exterior Coatings: Product information indicating that epoxy coating materials are suitable for use in potable water systems.
2. Manufacturer's Testing Data: Submit the following in accordance with paragraph MANUFACTURER'S TESTING DATA:
(a) Proof of Design
D. Other Submittals
1. Computer program for quality control tracking (reference paragraph QUALITY ASSURANCE). Submit upon request of the City.
2. Qualifications for Manufacturer's Field Service Representative. Submit upon request of the City.
3. Manufacturer's Certification of Instruction in accordance with paragraph MANUFACTURER'S FIELD SERVICE REPRESENTATIVE.

4. Manufacturer's Field Service Reports in accordance with paragraph MANUFACTURER'S FIELD SERVICE REPRESENTATIVE.

1.08 QUALITY ASSURANCE

A. Manufacturer shall have at least 5 years of experience in the design and manufacture of pipe, fittings, specials, and appurtenances. Submit information upon request by City.

B. Minimum required qualifications and experience shall include manufacture of a pipeline at least 5 miles in length, of equal or larger diameter than the pipe to be provided, with joints, lining, and coating suitable for the same or greater pressure rating, which has performed satisfactorily for the past 5 years. Submit information upon request by City.

C. Pipe shall be manufactured only in a facility having a current certificate under the compliance audit program of the American Concrete Pressure Pipe Association (ACPPA).

D. Manufacturer's Quality Assurance Plan: In addition to the requirements of AWWA and ASTM, the pipe manufacturer must have an established quality assurance program. The program must document the various raw material components that go into manufacturing each piece of pipe for this project. Each individual pipe section must be identified and every production sequence documented, with all pertinent information recorded and stored. The information must be retrievable by material, project, and shipping dates. As a minimum the following data shall be input into a City-approved computer program and submitted:
   1. Pipe serial number.
   2. Joint ring steel manufacturer and Certification of AWWA Standards.
   3. Cylinder manufacturing date.
   4. Cylinder steel manufacturer and Certification of AWWA Standards.
   5. Core placement date, cement type, and concrete mix design.
   6. Core kiln number.
   7. Prestressing wire manufacturer, heat, and core number.
   8. Prestressing date.
   9. Coating date, cement type.
   10. Coating kiln number.
   11. Shipping date.

1.09 PRODUCT DELIVERY, STORAGE AND HANDLING

A. Ship, move, and store with provisions to prevent movement or shock contact with adjacent units.

B. Handle with equipment capable of work with adequate factor of safety against overturning or other unsafe procedures.

C. Follow the provisions for the delivery, storage, protection and handling products to and at site provided in Section 01000 – General Project Requirements, paragraph PRODUCT DELIVERY, STORAGE AND HANDLING.

D. Pipe, fittings, and accessories shall be handled in a manner that will ensure installation in a sound, undamaged condition. Equipment, tools, and methods used in unloading, reloading, hauling, and laying pipe and fittings shall be such that the pipe, pipe coating, and fittings are not damaged. Use slings, lifting lugs, hooks, and other devices designed to protect pipe, joint elements, linings, and coatings. Hooks shall not be used.

E. Under no circumstances shall pipe or accessories be dropped or dumped.
F. Pipe and fittings shall not be moved by inserting anything into pipe ends.

1.10 PIPE DESIGN REQUIREMENTS

A. Unless otherwise indicated in Section 01015 – Specific Project Requirements, concrete cylinder pipe shall be design in accordance with the following paragraphs.
B. Furnish pipe of materials, joint types, and sizes as indicated on the drawings or as specified except as noted herein.
C. Pipe and fittings shall be designed in accordance with AWWA M9 and AWWA C304.
D. Pipe and fittings shall be designed to withstand the simultaneous application of the following external loadings and internal pressures under the specified conditions.

Table 1 – Design Parameters for Concrete Cylinder Pipe

Parameter	Criterion
Fluid Unit Weight	62.4 lb./ft^3
Outdoor Environment	365 days
Relative Humidity	60 percent
Time Before Filling	365 days
Minimum Cover Depth	15 feet
Live Load	H-20 at 3 feet
Minimum Working Pressure	200 psi
Minimum Surge Pressure	100 psi
Minimum Test Pressure	300 psi
Bedding Angle	45º

E. Pipe Manufacturer's Design Calculations: Pipe manufacturer's design calculations for the pipe and fittings shall be signed and sealed by a Registered Professional Engineer licensed in the State of Missouri. The manufacturer's engineer shall be a current employee of the pipe manufacturer and shall have had at least 5 years of experience with the pipe manufacturer. The calculations shall confirm the pipe wall thickness, amount of prestressing wire required, concrete compressive strength, steel cylinder thickness, and other parameters used in the design.

PART 2 - PRODUCTS

2.01 CONCRETE CYLINDER PIPE

A. Pipe shall be manufactured in accordance with AWWA C301 except as modified herein. Prestressed concrete cylinder pipe shall be embedded cylinder type for all sizes.
B. All prestressed concrete cylinder pipe, fittings, and specials shall be fabricated, lined, and coated by the pipe manufacturer.
C. Cement shall be ASTM C150, Type II. The 28-day test cylinder concrete compressive strength used for the design of the pipe shall not exceed 7,000 psi. If a

test cylinder compressive strength between 6,500 psi and 7,000 psi is used for design, a concrete mix design shall be submitted.

D. Fine aggregate shall be clean natural or manufactured sand as required by ASTM C33. No "rebound" shall be allowed in the cement mortar used for pipe.

E. Rubber gaskets shall be synthetic rubber.

F. Design of Pipe
   1. Design shall conform to AWWA M9 and AWWA C304 and as specified:
   2. Pipe Cylinder
      (a) The cylinder hoop stress at 1.5 times working pressure shall not exceed the yield strength of the steel. A minimum cylinder thickness of 10 gauge shall be furnished.
      (b) Cold-rolled sheets will not be acceptable.
      (c) The length of pipe with restrained joints shall be as indicated on the drawings or as specified. Restrained joints and pipe cylinders shall be designed to withstand the calculated stresses at all points along the pipe with restrained joints. The maximum longitudinal stress in pipe cylinders shall not exceed 13,500 psi at the specified working pressure; or 17,000 psi at the specified working pressure plus surge pressure, or the field test pressure, whichever is the greatest.
   3. Mortar Coating
      (a) Mortar coating thickness shall be a minimum of one (1-inch) over the prestressing wire.

G. Joints:
   1. Bell-and-Spigot
      (a) Provide bell-and-spigot-type joints for all buried pipe unless otherwise specified or indicated on the drawings.
      (b) Provide joints with steel joint rings and O-ring rubber gaskets conforming to AWWA C301.
      (c) Protect interior surface of the completed joint by grouting with Portland cement mortar.
      (d) The exterior surface of the completed joint shall be covered with a wide joint diaper (harness clamp restrained joint diaper with full width closed cell polyethylene foam lining) filled with grout.
      (e) All bells and spigots shall be the deep joint type (minimum 4-1/8 inches in joint depth).
   2. Flanged
      (a) Provide flanged joints for all interior and exposed exterior pipe except where otherwise specified or indicated on the drawings.
      (b) Flanges shall have a pressure rating not less than that required for pipe.
      (c) Flanges, bolts, and gaskets shall conform to AWWA C207, Class D and shall be drilled ANSI B16.1 Class 125.
   3. Coupled
      (a) Furnish couplings where indicated on the drawings.
      (b) Furnish pipe ends suitable for receiving the style of coupling indicated on the drawings or as specified.
      (c) Furnish anchored couplings where restraint is required to withstand specified operating or hydrostatic test pressure and where indicated on the drawings.
   4. Special

(a) Furnish pipe with joints suitable for attaching to valves and accessories and for indicated transitions.
(b) Joints shall be plain end, flanged, mechanical, or as otherwise indicated on the drawings or as specified.
(c) Adapters may be furnished in lieu of pipe with special joints.

5. Restrained
   (a) Provide either clamp-type or snap-ring type rubber and steel joints acceptable to City where restraint is required for joint to withstand specified operating and hydrostatic test pressure.
   (b) The length of pipe with restrained joints shall be as indicated on the Drawings or as specified.

H. Closure Assemblies
1. Provide closure assemblies acceptable to City where indicated on the drawings and as required by the sequence of construction.

I. Test Plugs
1. Provide pressure test plugs where required to test the installation.
2. Design test plugs to withstand hydraulic test pressure and external loading.
3. Join test plugs to pipe with selected joint and restrain as required to maintain internal pressures with external loading applied.
4. Provide outlets of proper size to facilitate flushing and disinfection.

J. Fittings and Specials
1. Fabricate conforming to AWWA C301 and M9.
2. Design to withstand internal pressure and external loading not less than that of adjoining pipe.
3. Furnish fittings with bell-and-spigot ends where such fittings connect with concrete pipe.
4. Furnish wall fittings with approved anchor ring where indicated on the drawings. Such fittings shall be of ductile iron or fabricated steel.
5. Furnish all adapters, outlets, and other specials as specified or where indicated on the drawings.
6. Furnish openings for air valve, drain, sampling, sensing, testing, and other connections with threaded bosses or flanged outlets sized and located where indicated on the drawings. Steel connections shall be lined and coated with mortar or other protective coating material if mortaring is not feasible.
7. Provide tangent blow-off and drain assemblies where indicated on the drawings. Outlet shall be a minimum 6-inch anchored mechanical joint spigot.
8. Short Bevel Fittings: Furnish and maintain two nominal full bevels and four nominal half bevel bends on site during pipe installation for minor alignment adjustments. Replenish as used until pipe is installed. Return unused bevels to pipe manufacturer.

2.02 MARKINGS

A. All pipe and fittings shall be marked in conformance with the standard specification under which the pipe is manufactured and as otherwise specified.
B. The following information shall be marked on each pipe, fitting, and special:
1. Design pressure.
2. Laying schedule number on all fittings and specials.
3. Date of casting.
4. Length of any short pipe.

2.03 EXTERIOR COATINGS

A. All exposed interior and exterior metal surfaces, including joint rings, outlets, adapters, closure pieces, and miscellaneous steel, shall be coated with an epoxy meeting NSF International requirements for contact with potable water. Submit product information in accordance with paragraph SUBMITTALS.

2.04 MANUFACTURER'S TESTING

A. Hydrostatic Testing of Pipe
   1. The pipe manufacturer shall hydrostatically test each cylinder after the joint rings have been attached.
   2. Test shall be completed prior to delivery to the Site
   3. The hydrostatic test pressure shall be a minimum of 75 percent of the cylinder design and shall be applied for a minimum of 1 minute.

B. The manufacturer shall hydrostatically test completed pipe prior to shipment to job site. Pipe of each size and class shall be selected at random by the City; however, no more than 10% of the pipe will be tested unless there are lengths that fail the test. The hydrostatic test pressure shall be a minimum of 1.5 times the test pressure and shall be for a minimum of five minutes, during which time the coating shall be checked for exterior cracks. Any pipe with visible cracks, at the specified test pressure, shall be rejected

2.05 PROOF OF DESIGN

A. Proof of design tests for each pipe size and joint configuration shall be performed by the manufacturer, witnessed and sealed by the Independent Testing Service selected by the City

B. The results of the tests shall be submitted to the City for review and approval prior to the start of manufacture.

C. The purpose of the tests are to prove the adequacy of the design and quality for each size and class of pipe and joint manufactured per the specification requirements.
   1. One standard length from each size and class of pipe shall be selected.
   2. The manufacturer shall conduct a combined load test to verify the design of the pipe.
   3. Strain gauges shall be placed strategically on the outside of the core and outside of the mortar coating to verify a zero allowable tensile stress with the following loads applied.
   4. An external load, equivalent to the maximum fill height in any one class, shall be applied simultaneously to the internal pressure, equivalent to the working pressure plus surge.
   5. The testing apparatus shall be designed to allow the entire pipe to deflect uniformly under the application of external load while maintaining a watertight seal.
   6. Bell and spigot configured bulkheads, which add stiffness to the pipe ends, will not be permitted.

2.06 POLYETHYLENE ENCASEMENT

A. As specified in Section 02618 – Ductile Iron Pipe Water Main.

2.07 TESTING OF JOINTS

A. Each joint shall be tested at a pressure not less than 1.5 times the test pressure.

B. In addition to being tested in the un-deflected condition, at least one joint of each size and type shall be tested at the maximum angle of deflection recommended by the manufacturer.
C. When testing restrained joints, the piping shall not be blocked to prevent separation and the joint shall not leak or show evidence of failure.
D. When angular deflection is required at restrained bell-and spigot joints, special bevels shall be provided for the exact angle or the deflection shall be obtained by opening joints on one side. Deflections by opening joints on one side shall not exceed the values recommended by the manufacturer and shall be proven by joint testing.

PART 3 - EXECUTION

3.01 INSTALLATION

A. Use equipment, methods, and materials ensuring installation to lines and grades indicated.
B. Maintain within tolerances specified or acceptable laying schedule.
   (a) Alignment: 1 inch per 100 feet in open cut or tunnel.
   (b) Grade: 1 inch per 100 feet.
C. Accomplish horizontal and vertical curve alignments with bends, bevels, and joint deflections.
   (a) Limit interior joint opening in concrete pipe except for open side on deflected joints to:
   (b) 3/8-inch in laying schedule.
   (c) 1/2-inch in actual installation.
   (d) Use short specials in curve as indicated.
D. Obtain acceptance of method proposed for transfer of line and grade from control to the Work.
E. Install pipe of size, materials, strength class, and joint type with embedment indicated for plan location.
F. Install pipe with bell ends in direction of laying. Obtain City approval for deviations there from.
G. Clean interior of all pipe, fittings, and joints prior to installation. Exclude entrance of foreign matter during installation and at discontinuance of installation.
   (a) Close open ends of pipe with snug-fitting closures.
   (b) Do not let water fill trench. Include provisions to prevent flotation should water control measures prove inadequate.
   (c) Remove water, sand, mud, and other undesirable materials from trench before removal of end cap.
H. Brace or anchor as required to prevent displacement after establishing final position.
I. Perform only when weather and trench conditions are suitable. Do not lay in water.
J. Observe extra precaution when hazardous atmospheres might be encountered.

3.02 JOINTING

A. General Requirements
   1. Locate joint to provide for differential movement at changes in type of pipe embedment, impervious trench checks, and structures.
      (a) Not more than 200 mm (8 inches) from structure wall, or

(b) Support pipe from wall to first joint with concrete cradle structurally continuous with base slab or footing or
(c) As indicated.

2. Perform conforming to manufacturer's recommendations.
3. Clean and lubricate all joint and gasket surfaces with lubricant recommended.
4. Use methods and equipment capable of fully seating or making up joints without damage.
5. Check joint opening and deflection for specification limits.

B. Special Provision for Jointing Concrete Pipe:
1. With rubber gaskets to steel joint rings:
(a) Check gasket position and condition with feeler gauge prior to installation of next section.
(b) Grout and/or point or seal joint spaces as follows:
(i) With stiff mortar of one part Portland cement as specified for pipe and one part sand. For pipe 600 mm (24-inch) and greater, trowel into entire circumference of joint to provide smooth, flush surface across joint. For pipes less than 600 mm (24 inches) in diameter, butter interior joint space of the bell with cement mortar prior to joining. Excess mortar squeezed out of the joint space by the joining action is to be smoothed by drawing an inflated swab through the pipe.
(ii) With grout of pouring consistency made of one part Portland cement and two parts sand, retained by a wide cloth diaper strapped or wired to the pipe. Use diaper designed for the joint. Rod grout with stiff wire formed to pipe curvature during pouring. Use diapered grout seal on restrained clamp-type and snap-ring type joints.
(iii) Lay pipe sufficiently in advance of pointing and grouting to preclude damage to mortar.

C. With rubber gaskets to concrete joint: Check gasket position with feeler gauge prior to installation of next section.
D. Pressure pipe installation shall conform to AWWA M9.

3.03 CLOSURE PIECES

A. Connect two segments of pipeline or a pipeline segment and existing structure with short sections of pipe fabricated for the purpose.
B. Observe Specifications regarding location of joints, type of joints, and pipe materials and strength classifications.
C. Field-fabricated closures (except ductile iron pipe and fittings), where required, shall be concrete encased between adjacent flexible joints.
D. May be accomplished with sleeve coupling:
1. Of length such that gaskets are not less than 75 mm (3 inches) from pipe ends.
2. Wrap exterior of buried steel couplings with polyethylene encasement conforming to AWWA C105

3.04 TEMPORARY PLUGS

A. Furnish and install temporary plugs at each end of Work for removal by others when completed ahead of adjacent contract.
B. Remove from pipe laid under adjacent contract in order to complete pipe connection when work by other contractor is finished prior to work at connection point under this Contract.

C. Plugs
   1. Test plugs as manufactured by pipe supplier.
   2. Fabricated by Contractor of substantial construction.
   3. Secured in place in a manner to facilitate removal when required to connect pipe.

3.05 POLYETHYLENE ENCASMENT

A. Polyethylene encasement shall be installed on all pressure pipe, fittings, valves and other appurtenances.
B. Install polyethylene encasement in accordance with Section 02618 – Ductile Iron Pipe Water Main, paragraph POLYETHYLENE ENCASEMENT.

3.06 APPLICATION OF EXTERIOR COATINGS

A. Clean exposed metal joint surfaces to SSPC-SP5 quality and 0.04-0.06 mm (1.5-2.5 mils) profile depth.
B. Apply two coats of epoxy in different colors at a minimum of 0.3-mm (12 mils) dry film total thickness.

3.07 MANUFACTURER'S FIELD SERVICE REPRESENTATIVE

A. The field service representative shall have a minimum of 5 years of experience as a representative of the pipe manufacturer in the area providing such services or shall be a registered professional engineer possessing a minimum of 2 years of experience in the area of manufacture of pipe and service representation.
B. The City shall have the right of final acceptance of the field service representative based on a resume of the individual indicating the minimum experience required above.
C. Pipe manufacturer shall provide a qualified field service representative to be on-site in accordance with the following:
   1. The field service representative shall visit the site and inspect, check, instruct, guide, direct the pipe installation Contractor's procedures for pipe handling, laying, and jointing.
   2. Site visits shall be made at the start of pipe installation for each crew and at each connection to an existing pipe.
   3. The field services representative shall be on site full-time when restrained joint pipe, fittings, and bevels are being installed.
   4. The field services representative shall visit the site as often as necessary to perform installation checks, by means of physical verification of the gasket position in the pipe joint (feeler gauge). Each pipe joint shall also be checked by the Contractor as instructed by the pipe manufacturer's field service representative to determine that the joint and the means of restraint are installed properly.
   5. The pipe manufacturer's field service representative shall attend the Preconstruction Conference, all progress meetings, final acceptance testing, and start-up.
   6. The pipe manufacturer's field service representative shall coordinate his services with the Contractor.
   7. Certification of Instruction: The pipe manufacturer's field service representative shall furnish to the City a written report certifying that the pipe installation Contractor's installation personnel have been properly instructed and have demonstrated the proper pipe handling and installation procedures.

8. Manufacturer's Field Service Reports:
   (a) The Contractor shall provide the pipe field service representative's written report of each site visit. At a minimum, the report shall include the following information:
      (i) Date of observations
      (ii) Summary of finding
      (iii) List of joints inspected
   (b) Reports shall be submitted on a monthly basis with the Contractor's Monthly Pay Application.

D. All costs for these services shall be included in the Bid.

3.08 FIELD TESTING

A. Acceptance Tests for Pressure Pipelines:
   1. Perform hydrostatic pressure and leakage tests.
      (a) Conform to AWWA C600 procedures.
         (i) As modified herein.
         (ii) Shall apply to all pipe materials specified.
      (b) Perform after backfilling.
   2. Test separately in segments between sectionalizing valves, between a sectionalizing valve and a test plug, or between test plugs.
      (a) Select test segments such that adjustable seated valves are isolated for individual checking.
      (b) Contractor shall furnish and install test plugs.
         - Including all anchors, braces, and other devices to withstand hydrostatic pressure on plugs.
         - Be responsible for any damage to public or private property caused by failure of plugs.

   3. Limit fill rate of line to available venting capacity. Fill rate shall be regulated to limit velocity in lines when flowing full to not more than 0.15 to 0.30 m/s (0.05 to 1 fps).
   4. The City shall make water for testing available to Contractor at nearest source.
   5. Contractor to provide equipment and labor to accurately measure and control flow rates.
   6. Pressure and Leakage Test:
      (a) Conduct at pressure determined by following formula:
         Test gradient El. (as specified by The City) - El. gauge x (.4335) = test pressure on gauge. Minimum test pressure shall be 160 psi for 12" and smaller water mains, and 225 psi for 16" and larger water mains.
         P_{pt} = test pressure in psi at gauge elevation
      (b) Be at least 2-hour duration. Maintain pressure throughout test □34.5 kPa (+5 psi) of test pressure.
      (c) Leakage test shall be conducted concurrently with the pressure test.
      (d) Acceptable when leakage does not exceed that determined by the following formula:

         (i) In metric units:
            $L_m = 0.0000014\ SD(P)^{1/2}/2$, in which
            L_m = allowable leakage, in liters per two hours

S = length of pipe tested in meters
D = nominal diameter of the pipe, in millimeters
P = average actual leakage test pressure in kPa

(ii) In English units:
$L = 0.0000075\ SD(P)^{1/2}/2$, in which
L = allowable leakage, in gallons per two hours
S = length of pipe tested, in feet
D = nominal diameter of the pipe, in inches
P = average actual leakage test pressure in psig

(e) These formulas are based on an allowable leakage of 1.08 L/day/km/mm (11.65 gpd/mile/in) of nominal diameter at a pressure of 1034 kPa (150 psi).
(f) When testing against closed metal-seated valves, an additional leakage per closed valve of 1.2 mL/h/mm (0.0078 gal/hr/in) of nominal valve size shall be allowed.
(g) When hydrants are in the test section, the test shall be made against the main valve in the hydrant.
(h) Repeat test as necessary.
(i) After location of leaks and repair or replacement of defective joints, pipe, fittings, valves or hydrants. All visible leaks are to be repaired regardless of the amount of leakage.
(ii) Until satisfactory performance of test
(i) The City will witness pressure and leakage test.

3.09 DISINFECTION

A. Disinfection of Pipelines for Conveying Potable Water:
1. Contractor shall provide all equipment and materials and perform conforming to AWWA C651.
(a) As modified herein.
(b) Include preliminary flushing, chlorination, and final flushing and piping for flushing.
2. Obtain approval of materials and acceptance of methods proposed for use.
3. May be conducted in conjunction with acceptance tests.
4. Contractor will provide sampling and laboratory testing.
5. Minimum preliminary flushing rates to produce 0.76 m/s (2.5 fps) velocity in main shall be as follows:

Pipe Size	Flow Rate	
16”	1200 gpm	12” discharge
30"	5500 gpm	12" discharge
42"	11,000 gpm	12" discharge

(a) Provide equipment and labor to accurately measure and control flow rates
(b) Dispose of flushing water without damage to public or private property.
6. A minimum initial dosage of 60 mg/L (ppm) in all portions.
(a) Allow to stand for 24 hours.
(b) Minimum 24-hour chlorine residual shall be at least 45 mg/L (ppm).
(c) De-chlorinate to 0 mg/L (ppm) chlorine.

(d) Flush pipeline before use for potable water supply purposes. Dispose of final flushing water without damage to public or private property.

7. Repeat disinfection procedure should initial treatment fail to yield a passing Bac-T or minimum residual.
   (a) At no additional cost to Owner.
   (b) The City will provide water under terms stipulated for acceptance tests.

END OF SECTION

SECTION 02620 – DUCTILE IRON PIPE FOR SEWERS

PART 1 - GENERAL

1.01 SUMMARY

A. This section covers materials and installation of pipe, fittings and relevant appurtenances associated with the installation of ductile iron pipe sewers. This section applies to all sewer mains 54 inches in diameter and smaller. This section also applies when diameters larger than 54 inches is specified for the project.

B. This section also includes Shop Coatings, Linings, Bolts, Nuts, Polyethylene Encasement and other Protective Coatings.

1.02 SPECIFICATION MODIFICATIONS

A. It is understood that throughout this section these Specifications may be modified by appropriate items in Section 01015 – Specific Project Requirements or as otherwise indicated on the Contract Drawings.

1.03 RELATED SECTIONS

A. Section 01000 – General Project Requirements.
B. Section 01015 – Specific Project Requirements.
C. Section 01300 – Submittals.
D. Section 02200 – Earthwork.
E. Section 02250 – Trenching, Pipe Embedment and Backfill.
F. Section 02669 – Thrust Restraints.

1.04 CODES AND STANDARDS

A. The publications listed below form a part of this specification to the extent referenced. The publications are referred to within the text by the basic designation only.

B. American Society for Testing and Materials (ASTM):

ASTM A276	Standard Specification for Stainless Steel Bars and Shapes
ASTM A307	Standard Specification for Carbon Steel Bolts and Studs, 60,000 psi Tensile
ASTM A746	Standard Specification for Ductile Iron Gravity Sewer Pipe
ASTM D4976	Standard Specification for Polyethylene Tubing.

C. American National Standards Institute (ANSI):

ANSI B18.2.2	Nuts for General Applications: Machine Screw Nuts, Hex, Square, Hex Flange, and Coupling Nuts (Inch Series).

D. American Water Works Associations (AWWA):

AWWA C105/ANSI A21.5	Polyethylene Encasement for Ductile Iron Piping
AWWA C110/ANSI A21.10	Gray-Iron and Ductile Iron Fittings
AWWA C111/ANSI A21.11	Rubber-Gasket Joints for Cast Iron and Ductile Iron Pressure Pipe and Fittings
AWWA C115/ANSI A21.15	Flanged Ductile-Iron Pipe with Ductile Iron or Gray Iron Thread
AWWA C150/ANSI A21.50	Standard for the Thickness Design of Ductile Iron Pipe
AWWA C151/ANSI A21.51	Ductile Iron Pipe Centrifugally Cast for Water
AWWA C153/ANSI A21.53	Ductile-Iron Compact Fittings, 3 in. through 24 in.

AWWA C203	Standards for Steel Pipe
AWWA C550	Protective Epoxy Interior Coatings for Valves and Hydrants
AWWA C600	Installation of Ductile Iron Water Mains and their Appurtenances.

E. International Organization for Standardization (ISO):

ISO 8179-1	Ductile Iron Pipes, Fitting, Accessories and their Joints – Zinc-Bases Coating – Part 1: Metallic Zinc with Finishing Layer.

1.05 INFORMATION PROVIDED BY THE CITY

A. As provided in the Contract Documents.

1.06 SUBMITTALS

A. Submit as specified in Section 01300 – Submittals.
B. Shop Drawings:
   1. Submit shop drawings and project data (laying schedule) for piping work showing pipe and fitting sizes, valve locations, joint details; and hydrant locations.
C. Product Data:
   1. Pipe Data. In accordance with paragraph QUALITY ASSURANCE.
   2. Test Data. In accordance with paragraph QUALITY ASSURANCE.
   3. Polyethylene Encasement.
   4. Push On Joints.
   5. Mechanical Joints.
   6. Flanged Joints.
   7. Appurtenances:
      (a) Tie rods.
      (b) Couplings.
   8. Interior Coatings.
   9. Exterior Coatings.
   10. Bolts and Nuts.
   11. Polyethylene Encasement.
D. Other Submittals:
   1. Manufacturer's Experience. In accordance with paragraph QUALITY ASSURANCE.

1.07 QUALITY ASSURANCE

A. Follow provisions of AWWA C600.
B. Manufacturer's Experience. The manufacturer shall be a company specializing in manufacturing the Products specified in this section with minimum three years documented experience. Submit manufacturer's experience in accordance with paragraph SUBMITTALS.
C. Mark rejected or defective materials and remove them from the work site.
D. The Contractor shall submit to the City written evidence of the following:
   1. Pipe Product Data. That the pipe furnished under this specification is in conformance with the material and mechanical requirements specified herein.
   2. Test Data. Certified copies of independent laboratory test results or mill test results from the pipe supplier may be considered evidence of compliance provided such tests are performed in accordance with the appropriate ASTM or AWWA testing standards by experienced, competent personnel. Pipe manufacturer's test results shall be stamped by a licensed Professional Engineer (PE) employed by the pipe manufacturer. In case of doubt

as to the accuracy or adequacy of mill tests, the City may require that the Contractor furnish test reports from an independent testing laboratory on samples of pipe materials.

E. The City will inspect all pipe, fittings, and accessories delivered to the site for damage, cleanliness, and conformance to the specifications. No damaged, broken, cracked, deformed, mishandled, imperfectly coated, defective pipe or fittings shall be used. At the sole discretion of the City and at no additional cost to the City, items that are not acceptable shall either be repaired or completely removed from the site.

1.08 PRODUCT DELIVERY, STORAGE AND HANDLING

A. Follow the provisions for the delivery, storage, protection and handling products to and at site provided in Section 01000 – General Project Requirements, paragraph PRODUCT DELIVERY, STORAGE AND HANDLING.

B. Pipe, fittings, and accessories shall be handled in a manner that will ensure installation in a sound, undamaged condition. Equipment, tools, and methods used in unloading, reloading, hauling, and laying pipe and fittings shall be such that the pipe, pipe coating, and fittings are not damaged. Hooks shall not be used.

C. Under no circumstances shall pipe or accessories be dropped or dumped.

D. Pipe and fittings shall not be moved by inserting anything into pipe ends.

E. Pipe and fittings on which the lining has been damaged shall be replaced at no additional cost to the City.

F. Where the damaged areas are small and readily accessible, the lining may be permitted to be repaired in accordance with the lining manufacturer's recommendations at no additional cost to the City.

1.09 ADDITIONAL COMPLIANCE SUBMITTALS

A. Additional requirements for compliance submittals will be found in Section 01015 – Specific Project Requirements.

PART 2 - PRODUCTS

2.01 DUCTILE IRON PIPE

A. Ductile iron pipe shall be designed and manufactured in accordance with AWWA C151/A21.51.

B. All pipe shall be manufactured from at least 90% recycled ferrous scrap material.

C. Pipe Thickness:

1. Pipe thickness shall be in accordance with AWWA C150/ANSI A21.50. The following minimum thickness shall apply:
   (a) Pipe 4 inches through 12 inches in diameter: Class 52.
   (b) Pipe 16 inches through 54 inches diameter: Class 54.
2. Pipe thickness classifications shall be as noted on the Drawings.

D. Exterior Coating:

1. The exterior of ductile iron pipe (not including fittings) shall be coated with a layer of arc-sprayed zinc conforming to ISO 8179-1.
2. The mass of the zinc applied shall be 200 g/m^2 of pipe surface area.
3. A finishing layer topcoat shall be applied to the zinc.
4. The mean dry film thickness of the finishing layer shall not be less than 3 mils with a local minimum not less than 2 mils.
5. The manufacturer shall clearly mark the outside of each pipe indicating the pipe has been coated in accordance with these specifications.

E. Interior Coating/Lining:
   1. All pipe shall be lined with TNEMEC Series 431 Perma-Sheild ® PL.

2.02 PUSH ON JOINTS

A. Pipe joints shall be of the push-on type unless otherwise specified or as shown on the Drawings.
B. Joints shall conform to ANSI/AWWA C111/A21.11.
C. Gaskets shall be neoprene or synthetic rubber. Gaskets shall be certified as suitable for wastewater use. Natural rubber will not be acceptable.
D. Restrained Joints. See Section 02669 – Thrust Restraints.

2.03 TESTING

A. All pipe shall be tested and documented per AWWA C151 and paragraph 1.07 D.2 defined herein.
B. All pipe 30” and larger shall also be hydrostatically tested to 75% of the yield strength of the metal based on the nominal thickness of the pipe.

2.04 FITTINGS

A. All fittings shall be made of Ductile Iron and manufactured according to AWWA C110/ANSI A21.10 or AWWA C153/ANSI A21.53.
B. Fitting joints shall be Mechanical Joint (MJ), Flange Joint (FLG), or Push-On Joint, per AWWA C111/ANSI A21.11. All MJ glands shall be ductile iron. Fittings shall have distinctly cast upon them, the pressure rating and the letters “DI” or “Ductile”. FLG Fittings shall be used only for aboveground installations.
C. Flanged Joints: Shall be provided with full-face gaskets and shall meet the requirements of AWWA C115/ANSI A21.15.
D. The exterior of fittings shall be coated with a layer of arc-sprayed zinc conforming to ISO 8179-1 or a zinc-rich primer conforming to ISO 8179-2. A finishing layer topcoat shall be applied to the zinc.
E. All fittings shall be interior coated/lined with TNEMEC Series 431 Perma-Sheild ® PL.

2.05 GLANDS AND OTHER APPURTENANCES

A. All glands shall have a polyester triglycidyl isocyanurate (TGIC) powder coating or an approved equal applied for corrosion protection. See also Section 02669 – Thrust Restraints.
B. Tie Rods shall be ASTM A276, Type 304 or Type 316 Stainless Steel.
C. Couplings (when approved for use by the City) shall be:
   1. Dresser “Style 38”.
   2. Smith-Blair “441 or 411 Flexible Coupling”; without pipe stop.
   3. Bolted compression type couplings shall be manufactured of epoxy coated steel or ductile iron specifically for use with ductile iron pipe.

2.06 TEE-BOLTS AND NUTS

A. Tee-Bolts shall be manufactured with high-strength, low-alloy steel in accordance with AWWA C111 and ASTM A307, with chamfered or rounded ends projecting 1/4 to 1/2 inch from surface.
B. Nuts shall be hexagonal manufactured in accordance with ASTM A307 and ANSI B18.2.2.
C. Provide ceramic-filled, baked-on, fluorocarbon resin coating for tee-bolts and nuts.
D. Include factory-applied lubricant that produces a low coefficient of friction for the ease of installation.

2.07 MARKINGS

A. Markings shall be legibly cast in the pipe or painted thereon with waterproof paint.

2.08 POLYETHYLENE ENCASEMENT

A. Polyethylene encasement materials shall be in accordance with ASTM D4976 and AWWA C105/ANSI A21.5.

B. The Contractor may use either Linear Low Density (LLD), High Density Cross Laminated (HDCL) or V-Bio® Enhanced Polyethylene film with the minimum properties indicated in Table 1 below:

Table 1. Minimum Requirements for Polyethylene Encasement

Item	LLD	HDCL	V-Bio®
Thickness, mil	12	4	8
Tensile Strength, psi	4,400	6,300	3,600
Elongation, percent	1,000	100	700
Dielectric Strength, v/mil	1,900	800	800
Tear Resistance, gf	4,400	250	2,550
Impact Resistance, g	1,100	800	600

C. Polyethylene encasement shall be provided in tubes. Sheeting is not allowed. The minimum tube size for each pipe diameter shall be in accordance with Table 2.

Table 2. Polyethylene Flat Tube Width (inches)

Nominal Pipe Diameter (inches)	Push-on Bell & Spigot Joints	Mechanical Joints
4	14	16
6	17	20
8	21	24
10	25	27
12	29	30
14	33	34
16	37	37
18	41	41
20	45	45
24	53	53
30	67	67
36	81	81
42	81	81

Table 2. Polyethylene Flat Tube Width (inches)

Nominal Pipe Diameter (inches)	Push-on Bell & Spigot Joints	Mechanical Joints
48	95	95
54	108	108

D. Color: The color of polyethylene encasement shall be green.
E. Adhesive Tape: Adhesive tape shall be a general purpose adhesive tape 1-inch wide and approximately 8 mils thick, such as Scotch Tape No. 50, Polyken No. 900, Tape coat CT or approved equal (duct tape is not allowed).
F. Sheeting is permitted for use on point repairs under 12 foot in length. All point repairs 12 foot and longer shall use tubing.

PART 3 - EXECUTION

3.01 INSPECTION

A. Pipe and fittings shall be carefully examined for cracks and other defects immediately before installation.
B. Spigot ends shall be examined with particular care since they are vulnerable to damage from handling.
C. All defective, damaged, or unsound pipe or fittings shall be rejected and marked as such and removed from the Site.

3.02 PREPARATION

A. Cutting Pipe:
   1. Cutting shall be done in a neat manner without damage to the pipe or the cement lining. Cuts shall be smooth, straight, and at right angles to the pipe axis.
   2. After cutting, the end of the pipe shall be dressed with a file to remove all roughness and sharp corners.
   3. Cutting of pipe with a torch will not be permitted.
B. Cleaning:
   1. The interior of all pipe and fittings shall be thoroughly cleaned of foreign matter before being installed and shall be kept clean until the work has been accepted.
   2. Surfaces shall be wire brushed, if necessary, wiped clean, and kept clean until jointing is completed.

3.03 LAYING PIPE

A. Runs intended to be straight shall be laid straight.
B. Deflections from a straight line or grade shall not exceed the maximum joint deflections for full length pipe as stipulated in AWWA C600. Shorter pipe sections or special bends shall be installed where the alignment or grade requires them.
C. Pipe shall be protected from lateral displacement by pipe embedment material installed as specified in Section 02250 – Trenching, Pipe Embedment and Backfill.
D. Under no circumstances shall the pipe be laid in water; and no pipe shall be laid in unsuitable trench conditions.

E. Pipe shall be laid with the bell ends facing the direction of laying except when reverse laying is specifically authorized by the City.
F. Whenever pipe laying is stopped, the open end of the line shall be sealed with a watertight plug that will prevent groundwater and other debris from entering the pipe.
G. No pipe length less than 18 inches in length shall be used.

3.04 MECHANICAL JOINTS

A. After proper joint cleaning, the gasket and gland shall be in position on the spigot before shoving the pipe to its final position. Center the entering spigot so that the gland or follower ring is parallel to the face of the connecting bell.
B. Joint shall be shoved "home" and the gland properly positioned with respect to the connecting bell with the connecting pipes in as nearly perfect alignment as practicable.
C. The bolts shall be slightly and uniformly tightened.
D. Deflection may be made after the bolts are tightened.
E. Coat the gasket with a lubricant supplied by the pipe manufacturer and all surfaces of the bell, spigot, and gland that will come in contact with the gasket at any time during assembly.
F. Gasket shall be carefully pushed into position and evenly seated in the bell. The gland shall be shoved into place against the gasket, the bolts inserted, and the nuts tightened with the fingers until snug. Final tightening of the bolts shall be done with a ratchet torque wrench.
G. Partially tighten the bottom bolt, then the top bolts, alternately either side, and finally the remaining bolts, alternately tightening bolts 180 degrees apart. This cycle is then to be repeated until all bolts are tightened to the torque specified by the manufacturer:

5/8” bolts --- 40 to 60-foot pounds
3/4” bolts --- 60 to 90-foot pounds

H. If sealing is not maintained at the torque specified, the joint shall be disassembled, thoroughly cleaned, and reassembled. Overstressing of bolts to compensate for poor installation practice will not be permitted.

3.05 PUSH-ON JOINTS

A. Wipe the gasket seat clean with a cloth and position in place. Coat the gasket with a lubricant supplied by the pipe manufacturer. Apply to all of the inner surface of the gasket that will come into contact with the entering pipe.
B. Clean the plain end of the pipe and apply a thin film of lubricant to the outside of the plain end of the pipe and its beveled edge. Align the plain end of the pipe with the bell of the pipe to which it is to be joined. The joint deflection angle should not exceed the recommended maximum of the manufacturer.
C. Bring the plain end of the pipe in contact with the gasket and exert sufficient force on the entering pipe so that its plain end compresses the gasket and makes contact with the base of the socket of the bell. This force can be applied by means of a jack type tool, backhoe, or other methods approved by the City.

3.06 FLANGED JOINTS

A. When bolting, care shall be taken to provide uniform gasket compression and prevent unnecessary stress on the flanges. Flange shall be free to move in any direction while the flange bolts are being tightened. Bolts shall be tightened gradually and at a uniform rate to provide uniform gasket compression.
B. Use full-face gaskets only.

3.07 RESTRAINED JOINTS

A. Restrained joints shall be installed in accordance with the pipe manufacturer's recommendations.
B. All joints within utility casings shall be restrained joints.

3.08 POLYETHYLENE ENCASEMENT

A. Polyethylene encasement shall be installed on all ductile iron pipe, fittings and appurtenances. The polyethylene shall be installed in a manner to prevent contact between the pipe, fittings, and the surrounding embedment.
B. The polyethylene encasement shall be installed as shown on the Construction Detail No. 02620-1 and as follows:
   1. Polyethylene encasement tubing shall be approximately two (2) feet longer than the length of the pipe section to provide a one (1) foot of overlap on each adjacent pipe section.
   2. Repair rips, punctures, or other damages to the polyethylene encasement with adhesive tape or with a short length of polyethylene tube cut open, wrapped around the pipe, and secured with adhesive tape as directed by the City.
C. Bolted Connections: All bolted connection shall by protected by 2 layers of polyethylene encasement. A minimum of 6 inches of overlap is required on each side of the connection.
D. Pipe-Shaped Appurtenances: Bends, reducers, offsets, and other pipe-shaped appurtenances shall be covered with polyethylene in the same manner as the pipe.
E. Odd-Shaped Appurtenances:
   1. Valves, tees, crosses, and other odd-shaped pieces that cannot practically be wrapped in a tube shall be wrapped with a flat sheet or split length of polyethylene encasement tube.
   2. The sheet shall be passed under the appurtenance and brought up around the body.
   3. Seams shall be made by bringing the edges together, folding over twice, and taping down.
   4. Tape polyethylene encasement securely in place at overlaps, valve tops and all other penetrations.
F. Lifting devices shall not be placed over polyethylene.
G. Polyethylene shall be protected from exposure to weather or damage at all times.
H. Openings in Encasement:
   1. Openings for branches or other appurtenances shall be made by making an x-shaped cut in the polyethylene and temporarily folding the film back.
   2. After the appurtenance is installed, tape the slack securely to the appurtenance and repair the cut as well as any other damaged areas in the polyethylene with tape.
   3. The new appurtenance shall be wrapped.
I. Junctions between Wrapped and Unwrapped Pipe:
   1. Where polyethylene wrapped pipe joins an existing pipe which is not wrapped, extend the polyethylene tube to cover the unwrapped pipe a distance of at least three feet.
   2. Secure the end with three circumferential turns of tape.

DETAIL 02620-1 ON NEXT PAGE

DETAIL 02620-1

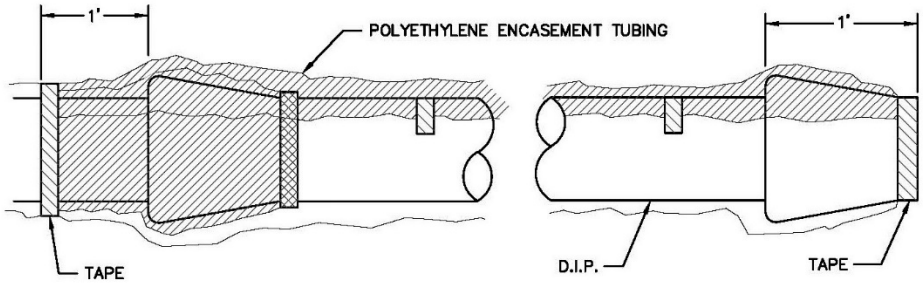

NOTES:

1. TAPE IN ACCORDANCE WITH AWWA C105

POLYETHYLENE ENCASEMENT
FOR DIP SEWERS

WATER SERVICES
CITY OF KANSAS CITY, MISSOURI
DRAWING NO. 02620-1

DEVELOPED BY: TECHNICAL ADVISORY COMMITTEE
APPROVED BY:
DATE: 1/22/2021

1 OF 1

END OF SECTION

SECTION 02623 – FIBERGLASS REINFORCED PIPE

PART 1 - GENERAL

1.01 SUMMARY

A. This section covers fiberglass reinforced polyester resin pipe, fittings, couplings and accessories for use in domestic, municipal and industrial sewage as an alternative material for all sewer piping with an inside diameter greater than or equal to 12 inches. Pipe shall be furnished complete with jointing materials and all other appurtenances necessary for installation.

1.02 SPECIFICATION MODIFICATIONS

A. It is understood that throughout this section these Specifications may be modified by appropriate items in Section 01015 – Specific Project Requirements.

1.03 RELATED SECTIONS

A. Section 01015 – Specific Project Requirements.
B. Section 01300 – Submittals.
C. Section 02250 – Trenching, Pipe Embedment and Backfill.
D. Section 02687 – Laser Profiling.
E. Section 02702 – Sewer Pipe and Manhole Testing.

1.04 CODES and STANDARDS

A. The publications listed below form a part of this specification to the extent referenced. The publications are referred to within the text by the basic designation only.
B. American Society for Testing and Materials (ASTM):
   1. D3262 – Standard Specification for “Fiberglass” (Glass-Fiber-Reinforced Thermosetting-Resin) Sewer Pipe.
   2. D3681 – Standard Test Method for Chemical Resistance of “Fiberglass” (Glass-Fiber-Reinforced Thermosetting-Resin) Pipe in a Deflected Condition.
   3. D3754 – Standard Specification for “Fiberglass” (Glass-Fiber-Reinforced Thermosetting-Resin) Sewer and Industrial Pressure Pipe.
   4. D4161 – Specification for “Fiberglass” (Glass-Fiber-Reinforced Thermosetting-Resin) Pipe Joints Using Flexible Elastomeric Seals.
   5. F477 – Specification for Elastomeric Seals (Gaskets) for Joining Plastic Pipe.
C. American Water Works Association (AWWA):
   1. C950 – Glass-Fiber Reinforced Thermosetting Resin Pipe.

1.05 QUALITY ASSURANCE

A. The Contractor is responsible for the quality assurance and quality control of the Work. The Work shall be performed by a Contractor with a proven record of performance for similar installations. The Contractor shall submit the following certification and warranty:
   1. Manufacturers – Manufacturer shall be experienced in the design and manufacture of pipe, fittings, specials and appurtenances for a minimum period of 5 years.

2. Warranty:
    a. Terms – Standard Manufacturer's warranty.
    b. Warranty Period – Standard Manufacturer's warranty period.

B. Control Tests:
1. Control tests shall be made during the manufacture of the pipe to determine its physical characteristics. Control tests shall be witnessed by an independent testing laboratory at the expense of the Contractor.
2. Control tests shall be performed on pipe of each diameter provided on the project in accordance with the appropriate governing standards. One set of tests shall be performed for each 100 pieces of pipe (sample size). The Contractor shall reject all pipe in the sample size if any test fails to comply with the specified requirements and standards.
3. Pipes shall meet the chemical requirements of ASTM D3262. The compliance testing shall be completed per section 9 of ASTM D3681 and shall have been conducted on the pipe specimens manufactured at the same factory proposed to fabricate the pipe for the project. Testing of products manufactured in another country or testing per section 10 of ASTM D3681 (re-qualification) is prohibited.

1.06 CONTRACTOR SUBMITTALS

A. Drawings, specifications, data and certificates covering all proposed materials being furnished shall be submitted to the Owner/Design Professional for review and approval in accordance with Section 01300 – Submittals and as defined in this Section.

B. Prior to commencing with construction, the Contractor shall submit the following for each size and class of pipe to the Owner/Design Professional for approval:
1. Shop Drawings:
    a) Pipe and joint details.
2. Product Data:
    a) Specifications and product data sheets.
    b) Color code and sample pipe piece illustrating exterior color.
    c) Laying schedule (complete with an explanation of all abbreviations used in the schedule).
    d) Gasket material data.
3. Certificates:
    a) Certificate of Compliance with applicable standards.
    b) Test reports.

1.07 PRODUCT DELIVERY, STORAGE AND HANDLING

A. Delivery, storage and handling of materials shall be in accordance with manufacturer's recommendations.

B. Pipe, fittings and accessories shall be handled in a manner that will ensure they are kept in a sound, undamaged condition during installation.

C. Use of textile slings is required for proper handling.

D. Use of chains, cables or hooks is prohibited for handling pipe and fittings.

PART 2 - PRODUCTS

2.01 MATERIALS

A. Pipe:

1. All materials used in the manufacture of pipe, fittings and accessories shall conform to ASTM D3754.
2. The manufacturer shall use only polyester resin systems with a silica sand filler which have a minimum of three years of successful performance in this particular application. The historical data shall have been acquired from the composite material of like composition to the proposed product for the project and shall be submitted to the OWNER when requested.
3. The reinforcing glass fibers shall be a commercial grade of E-glass filaments with binder and sizing compatible with the impregnating resins.
4. The sand shall be a minimum of 98 percent silica with a maximum moisture content of 2 percent.
5. Resin additives, such as pigments, dyes or other coloring agents, shall in no way be detrimental to the performance of the product.
6. Gaskets shall be suitable for the intended use, soil conditions and shall comply with ASTM F477.
7. Acceptable manufacturers shall be HOBAS USA, Inc., Flowtite or approved equal.
8. The internal corrosion liner resin shall be suitable for service as gravity sewer pipe and shall be fully resistant to exposure to sulfuric acid produced by the biological activity from hydrogen sulfide gases. The corrosion liner shall consist of non-reinforced thermoset polyester resin with a minimum thickness of 40 mils.
9. The minimum nominal pipe length shall be 20 feet.
10. The minimum pressure class shall be 50 psi for all pipe sizes.
11. The required pipe stiffness class (SN) shall be 115 PSI.
12. Each pipe or fitting shall have the following information plainly and permanently marked with a waterproof paint on the exterior surface:
    a) Pipe stiffness.
    b) Date of manufacture.
    c) Manufacturer’s name or trademark.
    d) “Sewer Pipe”.
    e) “ASTM D3262”.

B. All pipe, fittings and couplings exterior color shall be **GREEN**.

C. Joints:

1. All joints shall meet the performance requirements of ASTM D4161.
2. Pipe joints shall be formed using fiberglass sleeve couplings with elastomeric sealing rings.
3. Joints for tunnel carrier pipe shall be a low profile or a flush “jacking type” fiberglass bell and spigot type joint that utilizes an elastomeric sealing gasket contained in a groove on the spigot as the sole means of maintaining joint water tightness.

PART 3 - EXECUTION

3.01 SAFETY

A. Perform all work in accordance with applicable OSHA standards.

3.02 INSTALLATION

A. Excavation, bedding and backfill of the pipe shall conform to specification Section 02250 – Trenching, Pipe Embedment and Backfill.
B. Joints shall be installed in accordance with the pipe manufacturer's recommendations.
C. Immediately before the pipe sections are joined, all pipe ends and coupling components shall be shall be thoroughly cleaned to remove all dirt and debris.
D. Joint lubricant shall be applied to pipe ends and the rubber seals of the couplings. Only lubricant approved by the pipe manufacturer shall be used. The use of petroleum lubricants and animal-based lubricants is prohibited.
E. Suitable auxiliary equipment shall be used to pull pipe joints together with the jointing force applied to the pipe wall and not to the coupling. Excess force shall not be applied in jointing the pipe.
F. A shop-fabricated closure piece is required for all connections to existing sewer pipe. The fabricated closure piece shall ensure a water tight transition from the existing sewer to the new sewer.

3.03 Testing

A. Testing shall conform to specifications Section 02687 and Section 02702.

END OF SECTION

SECTION 02624 – POLYVINYL CHLORIDE (PVC) GRAVITY SEWER PIPE

PART 1 - GENERAL

1.01 SUMMARY

A. This section covers all work, materials and testing for the installation of PVC gravity sewer pipe by the open-cut method as shown on the Drawings and in conformity with these specifications. All pipelines shall be constructed to proper line and grade as shown on the Drawings and shall result in an unobstructed, smooth and uniform conduit.

B. This section does not cover PVC pipe associated with pipe bursting. See Section 02580 – Pipe Bursting for Gravity Sewers.

1.02 SPECIFICATION MODIFICATIONS

A. It is understood that throughout this section these Specifications may be modified by appropriate items in Section 01015 – Specific Project Requirements or as otherwise indicated on the Drawings.

1.03 RELATED SECTIONS

A. Section 01015 – Specific Project Requirements.
B. Section 01300 – Submittals.
C. Section 02250 – Trenching, Pipe Embedment and Backfill.
D. Section 02580 – Pipe Bursting for Gravity Sewers.
E. Section 02702 – Sewer Pipe and Manhole Testing.

1.04 CODES AND STANDARDS

A. The publications listed below form a part of this specification to the extent referenced. The publications are referred to within the text by the basic designation only.

B. American Society for Testing and Materials (ASTM):
   1. D2321 – Standard Practice for Underground Installation of Thermoplastic Pipe for Sewers and Other Gravity-Flow Applications.
   2. D2412 – Standard Test Method for Determination of External Loading Characteristics of Plastic Pipe by Parallel-Plate Loading.
   3. D3034 – Standard Specification for Type PSM Poly (Vinyl Chloride) (PVC) Sewer Pipe and Fittings.
   4. D3212 – Standard Specification for Joints for Drain and Sewer Plastic Pipes Using Flexible Elastomeric Seals.
   5. F477 – Standard Specification for Elastomeric Seals (Gaskets) for Joining Plastic Pipe.
   6. F679 – Standard Specification for Type PSM Poly Vinyl Chloride (PVC).

1.05 SUBMITTALS

A. Submit as specified in Section 01300 – Submittals.
B. Shop Drawings and Laying Schedule as required by City/Design Professional.
C. Product Data:
   1. Submit manufacturer's product data for all pipe, fittings and accessories to be used.
   2. Manufacturer's report of the test results.

3. A manufacturer's certification shall be submitted indicating that the pipe and fittings were manufactured, sampled, tested and inspected in accordance with this specification and meet the minimum requirements. Each certification furnished shall be signed by an authorized agent of the manufacturer.

1.06 QUALITY ASSURANCE

A. The Contractor is responsible for the quality assurance and quality control of the Work.

B. Manufacturer:

1. Certification of the minimum experience requirements. A minimum of five (5) years' experience in the design, manufacture and commercial supplying of the size and type of piping and fittings specified for the project.
2. Inspection and testing shall be performed by the Manufacturer's quality control personnel in conformance with all applicable standards. Testing may be witnessed by City, Design Professional or approved independent testing laboratory. The Contractor shall provide certified test reports indicating that materials conform to these specifications.

1.07 PRODUCT DELIVERY, STORAGE AND HANDLING

A. Inspect all materials delivered to the site for damage. Damaged pipe shall be replaced at no additional cost to the City.

B. Store materials (piping, jointing materials, rubber gaskets, etc…) with the minimum amount of handling possible. Store materials on site in enclosures or under protective coverings out of direct sunlight. Do not store materials directly on the ground.

C. Keep the interior of pipes and fittings free of dirt and debris.

D. Handle pipe, fittings and other accessories in such manner as to ensure delivery to the trench in a sound, undamaged condition. Hand carry, use slings or other approved devices designed to protect the pipe (do not drag pipe) when moving the materials.

PART 2 - PRODUCTS

2.01 REQUIREMENTS

1. Furnish pipe materials, joint types, sizes and strength classes as indicated and specified by the contract documents. The pipe shall be made of PVC plastic having a cell classification of 12454 or 12364 as defined in ASTM D1784.
2. Higher strengths Materials: may be furnished at the Contractor's option at no additional cost to the City.

2.02 PIPE, FITTINGS, JOINTS, COATINGS

A. Pipes and fittings eight (8) inches through fifteen (15) inches in diameter shall conform to ASTM D3034 except as otherwise specified herein.

1. The minimum pipe wall thickness shall be as shown in Table 1 unless a thicker wall is noted in the contract documents.
2. Color for pipe and fittings shall be green.
3. Furnish maximum pipe length normally produced by the manufacturer. Fittings, closures and specials shall be as specified in the contract documents.
4. All pipe shall have an integral bell and spigot joint.

5. Joints shall conform to ASTM D3212. Joints shall be push-on type only with the bell-end grooved to receive a gasket.

Table 1. Minimum Pipe Wall Thickness for Pipes 8 inches through 15 inches in Diameter

Depth of Pipe Cover (feet)	Pipe SDR
Less than or equal to 15 feet	26
15 to 30 feet	21
Greater than 30 feet	PVC pipe is not allowed

6. PVC pipe shall contain the markings required by ASTM D3034.
7. The spigot end of the pipe shall be marked with a reference line to facilitate assembly and installation inspection.
8. Elastomeric seals (gaskets) shall conform to ASTM F477. Natural rubber gaskets shall not be used.
9. Fittings (tee or wye connections) suitable for four (4) inch and six (6) inch sanitary service lines shall be bell-end with a minimum wall thickness conforming to SDR 26 unless a thicker wall is noted in the contract documents.
10. A special design is required for sanitary service connections 8 inches and larger. Special designs shall conform to the contract documents.
11. Saddle connections are not be allowed for sanitary sewer service lines.

B. Pipes and fittings eighteen (18) inches through (60) inches in diameter shall conform to ASTM F679 except as otherwise specified in the contract documents.
1. Furnish maximum pipe length normally produced by the manufacturer. Fittings, closures and specials shall be as specified in the contract documents.
2. Pipe shall have an integral bell and spigot joint to form a water tight seal.
3. Pipe shall have a minimum wall thickness conforming to ASTM F679 (PS115) unless a thicker wall is noted in the contract documents.
4. Joints shall conform to ASTM D3212. Joints shall be push-on type only with the bell-end grooved to receive a gasket.
5. Elastomeric seals (gaskets) shall conform to ASTM F477. Natural rubber gaskets shall not be used.
6. The minimum wall thickness of the fittings shall be the same as the minimum wall thickness of the equivalent size of the pipe for the project, specified in ASTM F679 or as otherwise specified in the contract documents, whichever is greater.
7. The minimum pipe stiffness shall be as specified in ASTM F679 (PS115) when tested at 5% deflection in accordance with Test method D2412.

PART 3 - EXECUTION

3.01 HANDLING

A. Pipe and accessories shall be handled in a manner that will ensure their finished installation keeps the materials in a sound, undamaged condition. Equipment, tools and methods used in loading, unloading, hauling and laying the pipe and fittings shall be such that the material is not damaged.

B. Pipe shall be handled in such a manner that no weight, including the weight of the pipe itself, will bear on or be supported by the spigot end or bell end at any time. Pipe and fittings which have been damaged to any degree will not be accepted and shall be removed from the project site.

3.02 TRENCHING AND BACKFILL.

A. Trenching, backfill, compaction and other efforts related to earthwork shall conform to Section 02250 – Trenching, Pipe Embedment and Backfill.

3.03 PIPE INSTALLATION

A. Install pipe and fittings in accordance with the requirements of ASTM D2321 for laying and joining pipe and fittings.

B. Inspect each pipe and fitting before and after installation; replace those found damaged or defective and remove from the trench and site.

C. Provide proper equipment and tools for lowering sections of pipe into the trench.

D. Lay pipe with the bell ends in the upgrade direction (bells ahead). Adjust spigots in the bells to give a uniform space all around. Blocking or wedging between bells and spigots is not allowed. Replace the pipe or fitting with one of the proper dimensions to allow uniform space for the proper installation of the joint.

E. At the end of each work day, temporarily seal the open ends of the pipe with a manufacturer's watertight plug or cap.

F. Provide batter boards not more than 25 feet apart in trenches for checking and ensuring that pipe invert elevations are as indicated in the contract documents. A laser beam may be used in lieu of batter boards for the same purpose.

G. Pipe shall be protected from lateral displacement by means of granular bedding material as provided in Section 02250 – Trenching, Pipe Embedment and Backfill.

H. Under no circumstances shall pipe be laid in water and no pipe shall be laid in unsuitable weather conditions or unsuitable trench conditions.

I. When the pipe is jointed in the trench, the main shall form a true and smooth line. Pipe shall not be trimmed except for closures. Pipe not providing a good fit shall be removed and replaced.

3.04 ALIGNMENT AND GRADE

A. All pipe shall be laid straight and true between changes in alignment and at a uniform grade between the changes in grade.

B. All lines shall be laid so that each section between manholes will fully lamp.

C. Pipe shall be aligned and constructed to the line and grade as shown on the Drawings.

3.05 JOINTING

A. All instructions and recommendations of the pipe manufacturer, relative to gasket installation and other jointing operations, shall be observed and followed by the Contractor. All joint surfaces shall be heavily lubricated with a vegetable soap solution immediately before the joint is completed.

3.06 CUTTING PIPE

A. Cutting of the pipe shall be done in a neat manner without damage to the pipe.
B. All cutting of pipe shall be done with a mechanical pipe cutter of an approved type by the manufacturer; except in locations where the use of mechanical cutters would be impracticable. Existing pipe may be cut with diamond point chisels, saws or other tools which will cut the pipe without damaging the pipe by impact or shock.
C. Pipe cuts shall be smooth, straight and at right angles to the pipe axis.

3.07 CLEANING

A. The interior of all pipe shall be cleaned of all foreign matter before being installed and shall be kept clean until the work has been accepted. All lumps, blisters and excess coating shall be removed from the exterior surface of the spigot and the interior surface of the bell. Such surfaces shall be brushed, wiped clean, dry and free from dirt, oil and grease before placing the spigot in the bell. All joint contact surfaces shall be kept clean until the jointing is complete.
B. Every precaution shall be taken to prevent foreign material from entering the pipe while it is being installed. No debris, tools, clothing or other materials shall be placed or left in the pipe.
C. Whenever pipe laying is stopped at the end of the work day, the open end(s) of the line shall be sealed with a watertight plug or cap. Whenever a tie-in to the existing collection system is being made, plugs shall be installed to prevent groundwater and debris from entering the collection system and removed just prior to installing the closure.

3.08 FIELD QUALITY CONTROL

A. All pipelines shall be tested in accordance with Section 02702 - Sewer Pipe and Manhole Testing.

END OF SECTION

SECTION 02630 – STORMWATER PIPE AND STRUCTURES

PART 1 - GENERAL

1.01 SUMMARY

A. This section covers all labor, work, materials and equipment required for the installation of stormwater pipe, structures and all associated appurtenances.

1.02 SPECIFICATION MODIFICATIONS

A. It is understood that throughout this section these Specifications may be modified by appropriate items in section 01015 – Specific Project Requirements or as otherwise indicated on the Contract Drawings.

1.03 RELATED SECTIONS

A. 01000 – General Project Requirements.
B. 01015 – Specific Project Requirements.
C. 01016 – Water Mains Near Sewers.
D. 01300 – Submittals.
E. 01320 – Construction Progress Documentation.
F. 02200 – Earthwork.
G. 02250 – Trenching, Pipe Embedment and Backfill.
H. 02575 – Surface Restoration.
I. 02605 – Drainage Structures.
J. 02624 – PVC Gravity Sewer Pipe.
K. 02686 – Cleaning and Assessment of Gravity Lines.
L. 02702 – Testing Requirements for Sanitary Sewer: Mains and Manholes

1.04 CODES AND STANDARDS

A. The publications listed below form a part of this specification to the extent referenced. The publications are referred to within the text by the basic designation only.
B. American Association of State Highway and Transportation Officials (AASHTO) standards as cited or referenced herein.
C. American Society for Testing and Materials (ASTM):

ASTM C76-19a	Standard Specification for Reinforced Concrete Culvert, Storm Drain, and Sewer Pipe
ASTM F3219	Standard Specification for 6 to 30 in. Polypropylene (PP) Corrugated Single Wall Pipe and Double Wall Pipe
ASTM F2764	Standard Specification for 6 to 60 in. Polypropylene (PP) Corrugated Double and Triple Wall Pipe and Fittings for Non-Pressure Sanitary Sewer Applications
ASTM D2412-21	Standard Test Method for Determination of External Loading Characteristics of Plastic Pipe by Parallel-Plate Loading
ASTM D3212-20	Standard Specification for Joints for Drain and Sewer Plastic Pipes Using Flexible Elastomeric Seals
ASTM F477-14	Standard Specification of Elastomeric Seals (Gaskets) for Joining Plastic Pipe
ASTM F2306	Standard Specification for 12 to 60 in. Annular Corrugated Profile-Wall Polyethene (PE) Pipe and Fittings for Gravity-Flow Storm Sewer and Subsurface Drainage Applications

ASTM D3350-14	Standard Specification for Polyethylene Plastics Pipe and Fittings Materials
ASTM D3034-16	Standard Specification for Type PSM Polyvinyl Chloride (PVC) Sewer Pipe and Fittings
ASTM F679-16	Standard Specification for Polyvinyl Chloride (PVC) Large-Diameter Plastic Gravity Sewer Pipe and Fittings.

1.05 INFORMATION PROVIDED BY THE CITY

A. As provided in the Contract Documents.

1.06 SUBMITTALS

A. Submit in accordance with Section 01300 – Submittals.
B. Submittals include, but not limited to, the following:
   1. Pipe Certifications.
   2. Joint Sealant and/or Gaskets.
   3. Product Data.

1.07 QUALITY ASSURANCE

A. The Contractor is responsible for the quality assurance and quality control of the Work.
B. Manufacturer:
   1. Shall be experienced in the design, manufacture and commercial supplying of the specified material for a minimum period of five (5) years.
   2. Shall be experienced in the design, manufacture, and commercial supplying of the specified size of pipe for a minimum period of three (3) years.
   3. Inspection and Testing shall be performed by the Manufacturer's quality control personnel in conformance with applicable standards. Testing may be witnessed by City, Design Professional, or approved independent testing laboratory. The Contractor shall provide certified test reports indicating that materials conform to all standards and specifications.
   4. Shall certify to the above minimum experience requirements.

1.08 PRODUCT DELIVERY, STORAGE AND HANDLING

A. Pipe, fittings, and accessories shall be handled in accordance with the pipe manufacturer's recommendations.
B. Equipment, tools, and methods used in handling and installing pipe and fittings shall not damage the pipe and fittings.
C. Pipe shall not be stored uncovered in direct sunlight.
D. Pipe materials delivered or stored on site shall be free of all damage, chips, cracks, gouges or ultraviolet (UV) degradation. Damaged materials shall be removed from the site and replaced at no additional cost to the City.
E. See also Section 01000 – General Project Requirements.

PART 2 - PRODUCTS

2.01 GENERAL

A. All materials and construction shall be in compliance with KCMO Water's Standard Specifications and Manufacturer's recommendations.
B. Reinforced Concrete Pipe: All reinforced concrete pipe (RCP) as called out on the Contract Drawings, shall be of standard manufacture in accordance with the applicable sections of the Standard Specifications. Pipe materials shall meet or exceed ASTM C76, Class II, III, IV, or

V (per the design), wall B, Reinforced Concrete Pipe (RCP). Reinforced concrete storm sewer pipe shall use synthetic rubber "O-ring" gasketed joints where specified on the plans.

C. Polyvinyl Chloride Pipe: All Polyvinyl Chloride (PVC) pipe for storm sewer pipe shall be a minimum of SDR 21 and comply with Section 02624 with the exception of the color requirement.

D. Dual Wall and Triple Wall Polypropylene Storm Sewer Pipe: Dual wall pipe and fittings 12 inch through 24 inch diameter shall conform to ASTM F3219 and triple wall pipe 30 inch through 60 inch shall conform to ASTM F2764, except as otherwise specified herein. Dual wall polypropylene pipe shall have a smooth interior and annular exterior corrugation. Triple wall polypropylene pipe shall have a smooth interior and exterior with annular inner corrugations. Pipe shall have a minimum pipe stiffness of 46 psi when tested in accordance with ASTM D2412. Pipe shall be joined with an integral bell and spigot joint on all sizes. The joints shall be watertight in accordance with ASTM D3212. The spigot shall have two gaskets meeting the requirements of ASTM F477. The gaskets shall be installed by the pipe manufacturer and shall be covered with a removable, protective wrap to ensure the gaskets are free from debris. A joint lubricant shall be used on the gasket and pipe bell during assembly. Pipe shall have a reinforced bell with a polymer composite band installed by the manufacturer.

E. High Density Polyethylene Pipe (For use outside of roadways): High density polyethylene (HDPE) pipe and fittings shall conform to ASTM F2306 with annular corrugations and an integral bell and spigot. The manufacturer of the pipe must participate in the AASHTO/National Transportation Product Evaluation Program (NTPEP). The maximum cover depth shall be 30 feet.
Material for pipe and fitting production shall be HDPE conforming with the minimum requirements of cell classification 435400C for 12" to 60" diameters as defined in ASTM D3350, except carbon black content shall not exceed 4%. Joint tightness shall conform to ASTM D3212. Elastomeric seal (gasket) shall have a basic polymer of synthetic rubber conforming to ASTM F477. Natural rubber gaskets will not be used. Bells shall span over three corrugations.

PART 3 - EXECUTION

3.01 INSTALLATION

A. Storm sewer pipe structures and appurtenances shall be provided, installed and constructed at the locations shown on the Drawings. Materials and construction shall be in compliance with this Section, Related Sections listed in paragraph 1.03 and Section 2600 of the "KCMO Standard Construction Specifications and KCMO Standard Drawings", except as amended herein.

B. Prior to constructing new sewers, the Contractor shall physically locate all utilities within ten (10) feet of the proposed sewers. If there is a utility conflict with the proposed sewers, the Contractor shall notify the City/Design Professional and survey the existing service top elevation and horizontal coordinates. Certified as-built redlines and the utility investigation surveying are the sole responsibility of the Contractor.

C. The Contractor is responsible for determining all conflicted crossings for the proposed storm sewer and submit their service-relocation shop drawings and/or certified sketches for the City/Design Professional's review and approval. (Contractor is also responsible for providing field electronic data such as the location coordinates and spot elevations for the City/Design Professional's use.) It shall be the responsibility of the Contractor to obtain necessary field information for aiding in determining the required minimum length of the existing sanitary or

any other services necessary to clear for the construction of proposed sewers. See also Section 01016 – Water Mains Near Sewers for additional requirements.

D. Existing sewer mains, sanitary sewer service laterals and water service lines that require relocation or adjustment, in the vertical or horizontal alignments shall be performed by the Contractor. Repairs to the damages caused by the Contractor are the sole responsibility of the Contractor.

E. Connection(s) to an Existing System pipe and structures shall be installed per manufacturer's guidelines and recommendations. Where a storm sewer pipe is being connected to an existing drainage structure, the work shall be constructed by sawing and chipping a hole through its sidewall to allow a minimum of three-inches of new concrete around the pipe. The invert shall be chipped away and replaced to shape a new doghouse collar and invert. The interior concrete surfaces shall be grouted smooth with non-shrink grout. Depending on the method and extent of the sidewall demolition, reinforcing bars may need to be doweled into the existing structure at the direction of the City/Design Professional.

F. Pipe Trimming: Pipes connecting to structures shall be cut parallel with the inside face of structures with plane walls. Pipes connecting to other pipes shall be cut parallel with the spring line of the pipe. Projection of the pipe beyond the inside face shall not exceed one inch. Voids shall be grouted with non-shrink grout.

G. Connection of Existing Pipes to New Pipes: Connection to and/or extension of an existing pipe shall be accomplished by using a fabricated non-shear coupling. The connection shall be properly supported to prevent settlement. All work shall be performed to the satisfaction of the City/Design Professional.

H. Pipe Abandonment: Any abandoned pipes left in place shall be filled with Fly Ash Slurry and both ends plugged with concrete or as otherwise specified in the Contract Drawings.

I. Tunneling under or near a tree: Storm sewer pipes within the drip line of a tree marked "Save" shall be installed by tunneling under the roots. Drip line is defined as the diameter of the tree in inches x 10 = drip line diameter in feet. One joint of RCP may be pushed with the excavator bucket. Boring and jacking shall be accomplished in accordance with KCMO 2600; steel casing may not be required for RCP, per the design. There will be no separate payment for tunneling operations of 30' or less.

3.02 ACCEPTANCE TESTING

The Contractor shall perform acceptance testing for all manholes, structures, pipe and all appurtenances in accordance with Section 02702 – Testing Requirements for Sanitary Sewer: Mains and Manholes. The Contractor shall furnish all labor, equipment, materials and provide the testing reports for the required acceptance tests. Pipelines that do not conform to the requirements shall be repaired and/or replaced and shall be retested until the pipeline meets the project requirements. Testing shall be performed in the presence of the City/Design Professional. Testing shall be recorded by the Contractor and a copy shall be submitted to the City/Design Professional. The mandrel or laser profiling testing shall be performed after backfill and compaction operations have been completed and in accordance with Section 02702.

3.03 POST CONSTRUCTION CCTV

A. Contractor shall provide post-construction CCTV video footage for all completed pipe, in accordance with Section 02686 – Cleaning and Assessment of Gravity Lines.

END OF SECTION

SECTION 02631 – POLYVINYL CHLORIDE (PVC) PRESSURE PIPE FOR STORMWATER AND WASTEWATER

PART 1 - GENERAL

1.1 SUMMARY

A. This section covers the furnishing and installation of buried polyvinyl chloride (PVC) pressure pipe for stormwater, domestic, municipal and industrial sewage. PVC pressure pipe shall be furnished complete with all jointing materials and all other necessary appurtenances. PVC is an alternative piping material for all sewer piping shown on the drawings. See also Section 01016 – Water Mains Near Sewers for installation requirements when constructing sewers near potable water lines. All pipeline materials shall be furnished by the Contractor. All material shall be new and shall comply with the specifications described herein.

1.2 SPECIFICATION MODIFICATIONS

A. It is understood that throughout this section these Specifications may be modified by appropriate items in Section 01015 – Specific Project Requirements, or as otherwise indicated on the Contract Drawings.

1.3 RELATED SECTIONS

A. Section 01000 – General Project Requirements.
B. Section 01015 – Specific Project Requirements.
C. Section 01016 – Water Mains Near Sewers.
D. Section 01300 – Submittals.
E. Section 01320 – Construction Progress Documentation.
F. Section 02200 – Earthwork.
G. Section 02250 – Trenching, Pipe Embedment and Backfill.
H. Section 02575 – Surface Restoration.
I. Section 02702 – Testing Requirements for Sanitary Sewer: Mains and Manholes.

1.4 CODES AND STANDARDS

A. The publications listed below form a part of this specification to the extent referenced. The publications are referred to within the text by the basic designation only.

B. American Society for Testing and Materials (ASTM):

ASTM F477	Standard Specification for Elastomeric Seals (Gaskets) for Joining Plastic Pipe.
ASTM D2241	Standard Specification for Polyvinyl Chloride (PVC) Pressure- Rated Pipe (SDR Series).
ASTM D3139	Standard Specification for Joints for Plastic Pressure Pipes Using Flexible Elastomeric Seals.

C. American Water Works Association (AWWA):

AWWA C110	Ductile-Iron and Gray-Iron Fittings, 3 Inches Through 48 Inches (75 mm through 1,200 mm) for Water and Other Liquids.
AWWA C153	Ductile-Iron Compact Fittings, 3 In. Through 24 in. (76 mm through 610 mm) and 54 In. Through 64 In. (1,400 mm through 1,600 mm), for Water Service.

AWWA C900	Polyvinyl Chloride (PVC) Pressure Pipe and Fabricated Fittings, 4 In. Through 60 In. (100 mm Through 1500 mm).
AWWA Manual M23	PVC Pipe - Design and Installation.

1.5 QUALITY ASSURANCE

A. The Contractor is responsible for the quality assurance and quality control of the Work.

B. Work shall be performed by a Contractor, with a proven record of performance for similar installations.

C. Manufacturer:

1. Shall be experienced in the design, manufacture and commercial supplying of the specified material for a minimum period of five (5) years.
2. Shall be experienced in the design, manufacture, and commercial supplying of the specified size of pipe for a minimum period of three (3) years.
3. Inspection and Testing shall be performed by the Manufacturer's quality control personnel in conformance with applicable standards. Testing may be witnessed by City, Design Professional, or approved independent testing laboratory. The Contractor shall provide certified test reports indicating that materials conform to all standards and specifications.
4. Shall certify to the above minimum experience requirements.

1.6 CONTRACTOR SUBMITTALS

A. Shop Drawings:

1. Pipe and joint details, including pipe sample piece.
2. Special, fitting, and coupling details.
3. Gasket material details.

B. Product Data:

1. Laying and installation schedule complete with an explanation of all abbreviations used in the schedule.

C. Certificates:

1. Affidavit of compliance with applicable standards.
2. Test certificates.

1.7 PRODUCT DELIVERY, STORAGE AND HANDLING

A. Pipe, fittings, and accessories shall be handled in accordance with the pipe manufacturer's recommendations.

B. Equipment, tools, and methods used in handling and installing pipe and fittings shall not damage the pipe and fittings.

C. Pipe shall not be stored uncovered in direct sunlight.

D. Pipe materials delivered or stored on site shall be free of all damage, chips, cracks, gouges or ultraviolet (UV) degradation. Damaged materials shall be removed from the site and replaced at no additional cost to the City.

E. See also Section 01000 – General Project Requirements.

PART 2 - PRODUCTS

2.1 MATERIALS

A. Pipe:

1. Pipe shall conform to ANSI/AWWA C900, as applicable.

2. At a minimum, the dimension ratio of all pipe sizes shall be DR 21 in accordance with ANSI/AWWA C900.
3. The pipe minimum inside diameter and location shall be as indicated on the drawings.
4. Gaskets shall conform to ASTM F477 and be synthetic rubber. Natural rubber gaskets are not acceptable.
5. Pipe Color:
   i. Pipe interior and exterior shall be **GREEN** or **WHITE**. Blue pipe is not acceptable.
   ii. Color Code and sample piece shall be supplied with shop drawings prior to pipe approval.
6. Each pipe and fitting shall have the following information plainly and permanently marked with waterproof paint thereon:
   i. Date of manufacture code.
   ii. Manufacturer's name or trademark.
7. Control tests:
   i. Quality control tests shall be performed during the manufacture of the pipe as required in AWWA C900.

B. Fittings:
1. Fittings shall conform to AWWA C110 or AWWA C153 and shall be ductile iron. Fittings shall be mechanical joint or push-on-type joint.
2. Fittings shall have pressure rating of not less than that specified for the pipe.
3. All fittings shall have pressure rating and letters "DI" or "DUCTILE" cast on the fitting.

C. Joints:
1. Joints shall be push-on type and meet the requirements of ASTM D3139. Gaskets shall meet the requirements of ASTM F477. Gaskets of natural rubber are not acceptable.
2. Joint lubricant shall be a vegetable based lubricant. Petroleum or animal based lubricants are not acceptable.
3. Restrained Joint PVC 4" -24" shall be C900, Eagle Loc, Diamond Lok, Certainteed Certa-lok or Fusible C900.

PART 3 - EXECUTION

3.1 INSPECTION

A. Pipe shall be carefully examined for cracks and other defects immediately before installation; spigot ends and bells shall be examined with particular care.
B. All defective pipe and fittings shall be marked as such removed from the site of the work.

3.1 CUTTING PIPE

A. Cutting shall comply with the pipe manufacturer's recommendations and with Chapter 7 of AWWA Manual M23.
B. Cuts shall be smooth, straight, and at right angles to the pipe axis.
C. After cutting, the end of the pipe shall be dressed to remove all roughness and sharp edges and shall be beveled in accordance with the manufacturer's instructions.

3.3 JOINTING

A. Jointing shall conform to the pipe manufacturer's instructions and recommendations.

B. All surfaces for gasketed joints shall be lubricated immediately before the joint is complete.

C. Gaskets and lubricants shall be supplied by the pipe manufacturer, shall be suitable for use in potable water, shall be compatible with the pipe materials, shall be stored in closed containers, and shall be kept clean.

D. Each spigot shall be suitably beveled to facilitate assembly.

3.4 CLOSURE PIECES

A. A shop fabricated closure piece is required at the connections to existing pipe.

End of Section

SECTION 02641 – WATER VALVES

PART 1 - GENERAL

1.01 SUMMARY

A. This section provides valve specifications and installation requirements for all valves and the associated appurtenances required for the project.

B. This section includes: Gate Valves, Butterfly Valves, Air Release Valves, Tapping Valves, Valve Boxes, Bases, Lids and Covers, Torque Limiting Devices, Valve Seals, Coatings and Check Valves.

1.02 SPECIFICATION MODIFICATIONS

A. It is understood that throughout this section these Specifications may be modified by appropriate items in Section 01015 – Specific Project Requirements or as otherwise indicated on the Contract Drawings.

1.03 RELATED SECTIONS

A. Section 01000 – General Project Requirements.
B. Section 01015 – Specific Project Requirements.
C. Section 01300 – Submittals.
D. Section 02250 – Trenching, Pipe Embedment and Backfill.
E. Section 03608 – Concrete Vaults.
F. Section 05012 – Water Castings.

1.04 CODES AND STANDARDS

A. The publications listed below form a part of this specification to the extent referenced. The publications are referred to within the text by the basic designation only.

B. American Society for Testing and Materials (ASTM):

ASTM A48	Standard Specifications for Gray-Iron Castings.
ASTM A126	Standard Specifications for Gray-Iron Castings for Valves, Flanges, and Pipe Fittings.
ASTM A276	Standard Specification for Stainless Steel Bars and Shapes.
ASTM A536	Standard Specification for Ductile Iron Castings.
ASTM A564	Standard Specification for Hot-Rolled and Cold-Finished Stainless Steel Bars and Shapes.
ASTM D47	Standard Test Method for Rubber Property-Effect of Liquids.
ASTM D1149	Standard Test Method for Rubber Deterioration-Surface Ozone Cracking in a Chamber.

C. American Water Works Association (AWWA):

ANSI A21.11/ AWWA C111	Rubber-Gasket Joints for Ductile-Iron Pressure Pipe and Fittings.
AWWA C504	Rubber-Seated Butterfly Valves.
AWWA C508	Swing-Check Valves for Waterworks Service, 2in. – 24 in.
AWWA C509-94	Standard Specification for Resilient Seated Gate Valves for Water Supply Service.

AWWA C512-99	Performance Standards for Air Release, Air/Vacuum, and Combination Air Valves for Water Works Service.
AWWA C515-09	Standard Specification for Reduced Wall Resilient Seated Gate Valves for Water Supply Service.
AWWA C153	Standard Specification for Ductile Iron Watermain Fittings.

1.05 MATERIALS PROVIDED BY THE CITY

A. Valves and appurtenances to be provided by the City shall be as indicated in Section 01015 – Specific Project Requirements.

1.06 SUBMITTALS

A. Submit as specified in Section 01300 – Submittals.

B. Shop Drawings:

1. Detailed drawings, data and descriptive literature on all valves and appurtenances; including, but not limited to, the following:
   - (a) Manufacturer.
   - (b) Dimensions .
   - (c) Size.
   - (d) Specification for materials of construction.
   - (e) Weight.
   - (f) Protective coating.
   - (g) Actuator weight and turns to operate where applicable.
   - (h) Calculations for actuator torque where applicable.
   - (i) Proof of design tests in accordance with AWWA C504, Section 5 – Verification. Tests shall include the following:
     - (i) Hydrostatic test.
     - (ii) Actuator proof of design testing.
     - (iii) Test valve rehabilitation.
     - (iv) Certification for proof of design.
   - (j) Cross section drawings detailing all components.
   - (k) Exploded assembly drawings.
   - (l) Parts list.
2. The Contractor shall submit descriptive literature describing the proposed valves and accessories. Contractor shall also furnish a copy of the manufacturer's warranty that applies to the valves and actuators. See part E. and Part 1.11 of this Section.

C. Product Data:

1. Gate Valves:
   - (a) Provide catalog data, including illustration and a parts list that identify the materials used for various parts. The information shall be in sufficient detail to serve as a guide in the assembly and disassembly of the valve and for ordering repair parts.
   - (b) Provide manufacturer's drawings showing the principal dimensions, construction detail, and materials used for valve parts.

D. Other Submittals:

1. Furnish the Butterfly Valve manufacturer's warranty that applies to the valves and actuators being proposed. The warranty period shall be for a minimum of three years after substantial completion of the contract under which the valve is installed or twenty years from the date of shipment, whichever comes first.

2. Furnish the Gate Valve manufacturer's warranty. See Paragraph 1.10 of this Section.
3. Furnish Affidavits of Compliance from the Butterfly Valve manufacturer and Gate Valve manufacturer.
4. Additional Affidavit of Compliance for Coatings: Submit affidavit(s) of compliance associated with the painting of the interior and exterior of the valves.

1.07 QUALITY ASSURANCE

A. The Contractor is responsible for the quality assurance and quality control of the Work.
B. Manufacturer:
   1. Valves shall be manufactured by a company specializing in the regular production of the Products specified herein and proven reliable in similar service for at least five (5) years.
   2. All valves of the same type shall be the product of one (1) manufacturer.

1.08 PRODUCT DELIVERY, STORAGE AND HANDLING

A. Follow the provisions for the delivery, storage, protection and handling of products to the site and on-site provided in Section 01000 – General Project Requirements.
B. Butterfly Valves:
   1. All other requirements of AWWA C504 Section 6.2 "Shipping" shall apply. Requirements include, but are not limited to, the following:
      (a) Cavities: The manufacturer shall prepare valves for shipment by draining all valve cavities.
      (b) Fastening requirements: Valves larger than 36 in. (900 mm) shall be bolted or otherwise fastened to skids. Each valve shall be fastened to and delivered on an individual pallet on 4" x 4", or heavier, wood skids, high enough to protect the valve and actuator
      (c) Surfaces: Uncoated steel and iron-machined surfaces shall be coated with a corrosion inhibitor.
      (d) Flange protection: Full-face flange protectors of metal, waterproof plywood, or weather-resistant pressboard, of at least the outside diameter of the flange, shall be fastened to each flange to protect both the flange and the valve interior.
      (e) Small valves: Small valves may be fully packaged at the manufacturer's option.
      (f) Valve components: Components shipped unattached shall be adequately protected and identified for correct field assembly.

1.09 INFORMATION TO BE SUBMITTED WITH BID

A. Butterfly Valves:
   1. Descriptive Literature: The Bidder shall include literature describing the valves and actuators to be furnished.
   2. Warranty: The Bidder shall furnish three copies of the manufacturer's warranty that applies to the valves and actuators proposed for the Work. The warranty shall meet the requirements of paragraph WARRANTIES below.

3. The Contractor's selection of butterfly valve manufacturer will be approved as part of the Bid process. Changes to information submitted with the Bid will not be allowed unless otherwise approved.
4. Butterfly valves and actuators that do not meet the minimum requirements of this specification may constitute a non-responsive bid.
5. Failure to provide the requested information with the Bid may constitute a non-responsive bid.

1.10 WARRANTIES

A. Gate valves:
   1. The manufacturer shall warranty that all gate valves provided for the Project will be free from defects in material and workmanship.
   2. The warranty period shall be for a minimum of three years after substantial completion of the Contract under which the valve is installed, or twenty (20) years from the date of shipment, whichever comes first.
   3. Submit in accordance with paragraph SUBMITTALS manufacturer's warranty for all butterfly valves provided. Warranty documentation shall include the date of shipment and unique serial number for each valve.
B. Butterfly valves:
   1. The manufacturer shall warranty that all butterfly valves and actuators provided for the Project are free from defects in material and workmanship.
   2. The warranty period shall be for a minimum of three years after substantial completion of the Contract under which the valve is installed, or twenty (20) years from the date of shipment, whichever comes first.
   3. Submit in accordance with paragraph SUBMITTALS manufacturer's warranty for all butterfly valves provided. Warranty documentation shall include the date of shipment and serial number for each valve.

PART 2 - PRODUCTS

2.01 GENERAL

A. Marking and identification of valves shall conform to AWWA C504 or AWWA C509/C515.

2.02 GATE VALVES

A. Approved gate valve manufacturers:
   1. Clow.
   2. Mueller.
   3. M&H.
   4. AVK.
   5. EJ
B. Gate valves shall be used on all water mains 12-inches and smaller.
C. Except as modified or provided herein, all gate valves shall be 200 psi, ductile iron body, resilient-seated, tight closure gate valves with non-rising stems conforming to the requirements of AWWA C509/C515. AWWA C515 Reduced-wall valves shall have a body and flange thickness/depth equal to or greater than AWWA C153.

D. Valve Ends:
   1. Mechanical Joint or Push-on Joint: Conforming to ANSI A21.11/AWWA C111 except where flange ends are required. Flanges shall be uniform in thickness/depth, thinning of flange face between bolt locations is prohibited. All glands shall be ductile iron.
   2. Flanged: Conforming to the dimensions and drilling of ANSI B16.42 for ductile iron flanges and flange fittings, Class 150. The laying lengths of the flange valves shall conform to the dimensions of ANSI B16.42.

E. Valve Gate:
   1. Wedge type gate with a minimum 3/8-inch thick resilient rubber, urethane rubber, Buna "N" or SBR rubber bonded to or mechanically attached to one side or both sides of the gate.
   2. No sliding or shear is permitted on the resilient seat, when compressed to a drop-tight shut-off.

F. Fasteners: All exterior bolts and nuts shall be ASTM A276 Type 304 or Type 316 stainless steel.

G. Operating Nut: The valve shall be equipped with a two-inch square operating nut produced from a material that is corrosion resistant (stainless steel, bronze, etc.) and has a minimum yield strength of 40 KSI. Operating nut shall have a flanged base upon which shall be cast the word OPEN and an arrow indicating the direction to open. The operating nut shall be securely pinned to the actuator shaft using a corrosion resistant (stainless steel, bronze, etc.) fastener.

H. Valve Stems: The gate valve stems shall be produced from a material that is corrosion resistant to potable water and has a minimum yield strength of 40 KSI.

I. Seals: Gate Valves shall be provided with stem seals of the "O" ring type. Two "O" rings shall be used with at least one "O" ring inserted above the thrust collar. The packing plate shall be attached to the valve bonnet by not less than two (2) bolts if bolts are required and one "O" ring below the thrust collar.

J. Coatings: All exterior surfaces of each valve shall be cleaned and painted in the shop with two (2) coats of asphalt varnish conforming to Federal Specifications TT-V-51-E. The interior surface shall have a protective coating of fusion-bonded, non-toxic epoxy that is safe for potable water. Non-toxic epoxy may also be used for exterior coating.

K. Tapping Valves: The valves shall be 200 psi, ductile iron body, resilient-seated, tight closure gate valves with non-rising stems in conformance with AWWA C509/C515, except that the outlet end shall be a standard mechanical joint end conforming to ANSI A21.11/ AWWA C111 and the inlet end shall have an inlet flange conforming to ANSI B16.42 for ductile iron flanges, Class 150. Gland shall be ductile iron.

2.03 BUTTERFLY VALVES

A. Approved butterfly valve manufacturers:
   1. M&H.
   2. Dezurik.
   3. VSI.

B. Butterfly valves shall be used on all mains 16-inches and larger.

C. Affidavit of Compliance:
   1. For each butterfly valve or appurtenance provided as part of the Contract, the Contractor shall submit the manufacturer's affidavit of compliance.

2. The affidavit shall certify that each butterfly valve or appurtenance meets the minimum requirements of the specifications.
3. Affidavits shall be printed on the manufacturer's letterhead and signed by responsible officials of the manufacturer attesting that the product meets specification requirements.
4. The affidavit must be dated after the award of the contract.

D. Butterfly valves shall comply with AWWA C504 and as specified herein:
1. Butterfly valves shall be rubber-seated.
2. Size: 16-inches through 72-inches in diameter.
3. Operating pH Range: 6 to 12.
4. Operating temperature range: 33º to 125ºF.
5. Maximum steady-state fluid working pressure: 250 psig.
6. Maximum steady-state differential pressure: 250 psi.
7. Maximum full open fluid velocity: 16 ft./sec (based on nominal valve size).

E. Body Type:
1. Vault Installation:
(a) Short Body, Flanged Valves.
(b) Material: Ductile Iron cast to full gray cast iron thickness.
(c) Class 150B for sizes 16-inches through 72-inches.
(d) Class 250B in sizes 16-inches through 48-inches.
2. Direct Bury Installation:
(a) Short Body, Mechanical-Joint-End Valves.
(b) Material: Ductile Iron cast to full gray cast iron thickness.
(c) Class 150B and Class 250B for sizes 16-inches through 24-inches.
(d) Class 150B and 250B for sizes 30-inches through 48-inches.

F. Actuators for Butterfly Valves:
1. Limitorque Model HBC series.
2. Auma Model GS series.

G. Torque Limiting Devices:
1. Model D86 Overtorque Protector Model D86 as manufactured by Aunspach Controls Company, Inc.

H. Interior Coatings for Valves 54-inches and greater:
1. Tnemec N141.

I. Exterior Coatings for Valves 54-inches and greater:
1. Tnemec N141.

J. The valves and actuators shall be of the latest model with all standard accessories ordinarily furnished to the industry except as otherwise specified herein.

K. All valves of one size shall be built by one manufacturer with actuators built by one manufacturer.

L. Serial Number: Each valve shall have a unique serial number, which shall be part of the information on the tag specified in paragraph MARKING REQUIREMENTS.

M. Marking Requirements:
1. Markings shall be cast on the body with raised letters or provided on a plate.
2. Plates shall be corrosion-resistant and shall conform to ASTM A276 Type 304 or Type 316 stainless steel.
3. At a minimum, the markings shall show the following information:
(a) Valve size.
(b) Manufacturer.
(c) Class.

(d) Year of manufacture.
(e) Unique serial number.
(f) The position of the valve seat in the valve body shall be marked on the outside of the valve body, within 12 inches of the actuator nut of upper valve trunnion, tagged or cast, in ¼-inch high print, "SEAT THIS SIDE."
(g) Number of turns to fully open or close the valve.

4. If the design is such that there is a preferred seating direction, the seating direction shall be marked.
5. Lettering Dimensions:
   (a) Cast letters: ½-inch minimum.
   (b) Plate letters: ⅛-inch minimum. Letters shall be etched or engraved.

N. The quantity, pressure rating, valve material type, and size of each valve shall be as indicated on the Drawings.

O. Design: All valve parts shall be designed for a minimum safety factor of 3 based on yield strength, or a safety factor of 5 if based on tensile strength.

P. Flow Coefficient:
1. The flow coefficient in terms of velocity head (K), in the full open position, shall not be greater than indicated in Table 1:

Table 1 - Maximum Allowable Flow Coefficients (K)

Valve Size	Valve Pressure Rating		
	75 psi	150 psi	250 psi
16-inch through 24-inch	0.40	0.45	0.55
30-inch through 48-inch	0.40	0.40	0.50
54-inch through 72-inch	0.40	0.40	---

2. Pressure measurements shall be made at two pipe diameters upstream of the valve and eight pipe diameters downstream of the valve in accordance with recommended procedures of ASME Report on Fluid Meters, Latest Edition.

Q. Minimum Port Diameter: The minimum port diameter through the valve shall not be less than indicated in Table 2:

Table 2 – Minimum Allowable Port Diameter

Nominal Valve Size (inches)	Allowable Difference in Diameter (inches)
16 through 42	1
48 through 54	1 ¼
60 through 72	1 ½

R. Fasteners: All bolts and nuts inside and outside the valve, except Mechanical Joint bolts and nuts, shall be ASTM A276 Type 304 or Type 316 stainless steel or ASTM A564 Grade 630 stainless steel.
S. Valve Body: The valve body shall be ductile iron poured to full gray iron thickness.
T. End Plate: No bolt or end thrust adjusting screw shall extend through the End Plate.
U. End Connections:
    1. The dimensions and drillings of end flanges shall conform to ANSI B16.42 for 75 psi valves, ANSI B16.42 Table 5 for 150 psi valve and 250 psi valves, both with 150 psi drillings.
    2. If specified or shown on the Drawings, 250 psi dimensions and drillings of end flanges shall conform to ANSI B16.42 Table 8, to include but not be limited to, flange outside diameter, flange thickness, bolt circle diameter, bolt diameter, and bolt quantity.
    3. The mechanical joint valves are to include the following accessories: gaskets, ductile iron gland rings, mechanical joint bolts, and nuts.
V. Shafts:
    1. All valve shafts shall be in accordance with AWWA C504 Table 3 unless otherwise amended herein.
    2. All valve shafts, dowels, and taper pins shall be ASTM A276 Type 304 or Type 316 stainless steel or ASTM A564 Grade 630 condition H1100 stainless steel.
    3. The valve shaft shall have a means of clearly indicating the position of the disc on the actuator end of the shaft. This mark shall be machine grooved and shall be visible when the cover and lubrication are removed and shall be offset to the same side as the disc.
    4. The valve shaft shall be completely enclosed between the valve body and the actuator body.
W. Valve Disc: The valve disc shall be ductile iron and shall seat perpendicular to the centerline axis of the valve body.
X. Valve Seats:
    1. The resilient seat shall be EPDM synthetic rubber applied to the valve disc.
    2. The resilient seat shall be mechanically secured to either the valve disc or valve body with ASTM A276 Type 304 or Type 316 stainless steel fasteners or non-bonding epoxy.
    3. Resilient seats shall be field adjustable and replaceable without special tools or instruction.
    4. Mating surfaces for the valve seats shall be ASTM A276 Type 304 or Type 316 stainless steel.
    5. All seats shall be designed to provide tight shut-off with flow in both directions.
Y. Shaft Seals:
    1. Seal shall be provided by the use of standard V-type packing or standard “O” ring seals; pull-down packing is not acceptable.
    2. The valve shall be designed so that the actuator may be removed and replaced while the valve is in service without losing water.
Z. Actuator:
    1. The actuator shall be a link lever traveling nut type, worm gear type, or yoke and nut type and shall be capable of withstanding submersion in water to a pressure of 10 psi.
    2. All exposed bolts, nuts, and shafts shall be of ASTM A276 Type 304 or Type 316 stainless steel or ASTM A564 Grade 630 condition 1100 stainless steel.

3. All actuators shall have outside mechanical adjustments capable of adjusting valve travel without removing the valve from the pipeline or removing the actuator cover.
4. Direction of Operation:
   (a) Buried service valves shall open right (clockwise).
   (b) Vault service valves shall open left (counterclockwise).
5. Operating Nut: The actuator shall be equipped with a two-inch square operating nut produced from a material that is corrosion resistant (stainless steel, bronze, etc.) and has a minimum yield strength of 40 KSI. The operating nut shall have a flanged base upon which shall be cast the word OPEN and an arrow indicating the direction to open. The operating nut shall be securely pinned to the actuator shaft using a stainless steel fastener.
6. Handwheels: For vault service valves, the actuator shall be supplied with a handwheel. The handwheel shall be no smaller in diameter than 30 inches and no larger in diameter than 36 inches. Manual actuators shall be suitable for future adaptation to motor operation. Vault service actuators shall have an indicator on the exterior of the actuator indicating the valve disc position. This indicator shall be stainless steel.
7. All gearing and actuator stops shall be enclosed in a suitable housing with a removable cover to permit inspection, repair, and adjustment of the mechanism.
8. Adjustable stop limiting devices shall be provided inside the actuator housing to stop the input shaft at full open and full closed positions. The use of stop nuts or shaft collars which rely on clamping forces or set screws to prevent rotation of the nut or collar on the screw shaft will not be acceptable.
9. The actuator shall rotate the disc from full open to full closed and vice-versa using not less than, nor more than, the number of turns indicated in Table 3:

Table 3 – Minimum and Maximum Turns for Butterfly Valves

Valve Size (inches)	Minimum Turns	Maximum Turns
16	30	60
20	40	80
24	40	80
30	40	200
36	80	200
42	80	220
48	90	300
54	90	700
60	200	700
72	200	700
90	200	700

AA. Painting Interior of Valves:
1. The interior of valves sizes 16-inch through 72-inch shall be coated with a white, NSF 61 certified, fusion-bonded or powder coated epoxy.
2. Surface preparation and application shall be in accordance with SSPC PA-1.
3. The dry film thickness of the coating shall be a minimum of 10 mils.

BB. Painting Exterior of Valves:
1. The exterior of valve sizes 16-inch through 48-inch shall be coated with an NSF 61 certified, fusion-bonded or powder coated epoxy.
2. The exterior of valve sizes 54-inch through 70-inch shall be coated with an epoxy paint.
3. Surface preparation and application shall be in accordance with SSPC PA-1. The dry film thickness of the coating shall be a minimum of 10 mils.

CC. Factory Inspections:
1. The City's representative shall witness the performance, leakage and hydrostatic tests as prescribed in AWWA C504, Section 5 – Verification. Factory tests shall be conducted at the Manufacturer's facility.
2. The City's representative will inspect all valves provided as part of the Contract for conformance to the Contract Documents.
3. No valve shall be shipped from the manufacturer's facility until it passes the factory inspection to the satisfaction of the City.
4. All costs associated with the factory inspection shall be included in the Bid. The Contractor (or valve manufacturer) shall pay all expenses for transportation, lodging, and meals required by the City's representative to complete the inspection. Absolutely no expenses are to be paid by the City's representative at any time. All transportation and lodging shall be subject to approval by the City.
5. The Contractor shall coordinate with the City's representative regarding the schedule for the factory inspection. The inspection date and time shall be approved by the City.
6. The need for multiple factory inspections is at the discretion of the Contractor (or valve manufacturer.) The costs to conduct multiple inspections, or to reschedule a factory inspection, shall be included in the Bid and shall be conducted at no additional cost to the City.

DD. Post-Delivery Inspections:
1. After the valves are delivered, the City may again test the valves and actuators for compliance with the Contract Documents.
2. Any valve that does not meet specifications or fails testing will be considered defective work, and shall be addressed in accordance with Section 00700 – General Conditions, Article 13 – Tests and Inspection; Correction, Removal or Acceptance of Defective Work.
3. The Contractor shall also be responsible for all testing expenses incurred by the City for all valves that fail to perform as specified herein.

EE. Torque Limiting Devices:
1. Contractor shall provide a Torque Limiting Device for each direct-bury butterfly valve as specified herein.
2. The torque limiting device shall make over-torque, in either direction, impossible. The unit shall be preset and designed to release when the torque level exceeds 210 foot pounds on the operating nut, in either direction, OPENING or CLOSING the valve. The torque unit shall reset automatically when the torque level drops below 200 foot pounds on the operating nut in either direction.

3. The torque level of the unit shall be adjustable so it may be field set to release at a desired torque limit.
4. The unit shall be less than 5-1/4 inches in diameter and made to mount on the valve inside of the 6-inch diameter stem riser tube of the valve box or in the valve box.
5. The unit shall be provided with a two-inch AWWA operating nut, securely attached to the device. The nut shall have an arrow on the base indicating the valve opens to the "RIGHT" (clockwise) and the word "OPEN". The unit shall be provided with a two-inch square tapered AWWA socket securely attached to the device. The socket shall fit a 2-inch AWWA nut.
6. The unit shall be designed to withstand submersion in water to a pressure of 10 psi; to endure long periods (years) of active or inactive use buried underground and submerged in water. The unit shall be sealed to prevent water and direct from entering the mechanism. The unit shall be packed with a suitable grease.
7. All housing parts, including nut and socket, shall be coated inside and outside with catalyzed (2-part) epoxy. A top coat of catalyzed (2-part) polyurethane enamel shall be applied over the epoxy for additional hardness and extra corrosion protection.
8. Contractor shall mount the torque limiting device's integral socket on each butterfly valve's 2-inch AWWA operating nut inside of the stem riser tube before backfilling around the valve. No fasteners or screws shall be used to secure the torque limiting device to the operating nut.

2.04 AIR RELEASE VALVES AND COMBINATION VALVES

A. Approved manufacturer:
   1. ARI Flow Control Accessories.
B. Air Release Valves:
   1. Air release assemblies shall be manufactured in accordance with AWWA C512 performance standards.
   2. All piping shall be brass pipe except the air outlet from the air release valve that shall be brass or copper tubing. Brass piping shall be ASTM B43, Extra Strong with ASME 816.1 Class 250 fittings.
C. Air Release Valves for mains 12-inches in diameter or smaller shall be 3/4-inch in Diameter unless otherwise specified.
   1. Isolation valves shall be ¾-inch stainless steel ball valves, 150 psi working pressure.
   2. Air release valves shall be installed in accordance with Drawing No. 02641-1.
   3. Provide vault cover with minimum one 1-inch diameter hole for air flow.
D. Combination Air Release Valves for mains larger than 12-inches in diameter:
   1. The contractor shall submit to ARI Flow Control Accessories the bid documents so ARI may perform a sizing and placement analysis to verify the placement and sizing of the valves specified during the design of the waterline.
   2. Isolation valves shall be 2 inch stainless steel ball valves with screwed, non-rising stems, 175 psi working pressure or wafer style BFV with handwheel or lever operator.
   3. Air release valves shall be installed in accordance with Drawing Nos. 02641-2 and 02641-2B.
   4. Provide vault cover with a minimum of four 1-inch diameter holes for air flow.

E. Air Release Valves for mains 12-inches in diameter or smaller shall be 3/4-inch in diameter unless otherwise specified:
   1. Model S-050 as manufactured by ARI Flow Control Accessories.
F. Combination Air Release Valves shall be used for mains larger than 12-inches in diameter:
   1. Model D-040 Combination Air Release Valve 2-inch as manufactured by ARI Flow Control Accessories.
   2. Model D-060 Combination Air Release Valve 3-inch and larger as manufactured by ARI Flow Control Accessories.

2.05 VALVE BOXES AND BASES

A. Approved manufacturers:
   1. Ametek.
   2. MacLean Highline.
   3. Pentek Access Boxes.
B. All valve boxes and bases shall be one-piece only.
C. One-piece valve boxes and bases shall be injection molded plastic conforming to ANSI/ASTM 2853, Class 1212.

2.06 VALVE BOX LIDS AND COVERS

A. Approved manufacturers and models shall be in accordance with this section and section 05012 – Water Castings.
B. Approved manufacturers:
   1. Clay & Bailey.
   2. Sigma Municipal Castings.
   3. Star Pipe Products.
   4. EJ.
   5. MacLean Highline.
   6. Pentek Access Boxes.
C. The approved manufacturers shall submit their model in accordance with this Section and Section 01300 – Submittals for review and approval.

2.07 CHECK VALVES

A. Approved manufacturers:
   1. Kennedy Valve.
   2. ValMatic.
B. Check valves shall be ductile iron body with reinforced Buna-N rubber flapper.
C. Check Valves shall be rated for 250 psi working pressure, 500 psi hydrostatic test for structural soundness.
D. Check Valves shall have ANSI 16.42 – Class 150 flanged end connections.
E. The check valve body shall have full flow equal to nominal pipe diameter at all points in the valve. The valve body shall be of ductile iron construction to ASTM-A-536-65-45-12. Castings shall be clean, sound and without defects. No plugging or welding of such defects will be allowed. The seating surface will be at a 45 degree angle to minimize water hammer.
F. Rubber Clapper & Hinge shall be constructed of ductile iron to ASTM-A 536-65-45-12. Both Clapper and hinge shall have permanently bonded Buna-N rubber with a metal reinforcement connecting the hinge to the clapper.

G. The top cover plate will be of ductile iron to ASTM-A536-65-45-12 and must be of full size to allow removal of the disc without removing the valve from line. All exterior nuts and bolts shall be 304 or 316 stainless steel.
H. All iron parts inside and out will be fusion bonded epoxy coated. All coatings must be NFS-61 approved for use in drinking water systems.
I. Vault service check valves shall have an external mechanical position indicator.

2.08 VAULTS

A. Concrete vaults shall conform to Section 03608 – Concrete Vaults.

PART 3 - EXECUTION

3.01 INSPECTION

A. Each valve shall be inspected before installation to ensure that all foreign substances have been removed from within the valve body.
B. Valves shall be opened and closed to see that all parts are in required working condition.

3.02 SETTING VALVES

A. All valves and fittings shall be set and jointed in the manner specified herein. The valves shall be set vertical in the horizontal pipeline. All valves shall be anchored directly to adjacent tees or crosses.
B. One-piece valve box and base or a two-piece valve box and valve base shall be installed on all valves. An approved valve box alignment device shall also be installed in all valve boxes. Install in accordance with Standard Detail No. 02641-4 – Actuator Nut Extension.
C. Valve covers, bases, and lids shall be supported and maintained, centered and plumb over the actuator nut. Cover shall be flush with the roadway or ground surface or at such other as directed by the City.

3.03 AIR RELEASE VALVES

A. Air release valves shall be installed in accordance with the following Standard Details:
   1. Mains 12-inches and smaller:
      (a) Standard Detail No. 02641-1 – Typical Air Release, 12” Mains and Smaller.
   2. Mains 16-inches and larger:
      (a) Standard Detail No. 02641-2 – Typical Air Release, 16” Mains and Larger.
      (b) Standard Detail No. 02641-2a – Typical Air Release, 3” ARVs & CAVs, Type “A” Setting, 16” Mains and Larger.
      (c) Standard Detail No. 02641-2b – Typical Air Release, 3” ARVs & CAVs, Type “B” Setting, 16” Mains and Larger.

3.04 BUTTERFLY VALVES

A. Install in accordance with Standard Detail No. 02641-3 –Typical Butterfly Valve Installation.

3.05 QUALITY CONTROL

A. Leak Tests for Butterfly Valves:
   1. Each valve shall be shop tested in both directions for leaks in the closed position. The test shall be conducted with the body in a horizontal plane.
   2. Air pressure shall be applied to the lower face of the disc for 5 minutes.
   3. Both 150-psi and 250-psi rated valves shall be leak tested to 250-psi pressure.
   4. The upper surface of the valve disc shall be visible and covered with a pool of water at "O" psi pressure. There shall be no leakage past the valve disc. Bubbles will appear in the water on the disc if it is leaking.
   5. The valve body shall be tested with an internal hydrostatic pressure equivalent to two times the specified shutoff pressure. There shall be zero leakage during the test through the casting, the end joints or the shaft seals. Any part damaged by the Manufacturer's factory testing shall be replaced or a new valve provided.
   6. The hydrostatic test period for 4-inch valve bodies through 20-inch bodies shall be at least 3 minutes. Valve body's 24-inch and larger shall be tested for at least 10 minutes.

B. Operational Test for all valves:
   1. Prior to installation, each valve shall be operated three times from the fully closed to the fully open position and vice versa.
   2. Each valve shall also be tested in the same manner following installation.

THE FOLLOWING SIX PAGES CONTAIN
TYPICAL INSTALLATION DETAILS

DETAIL 02641-1

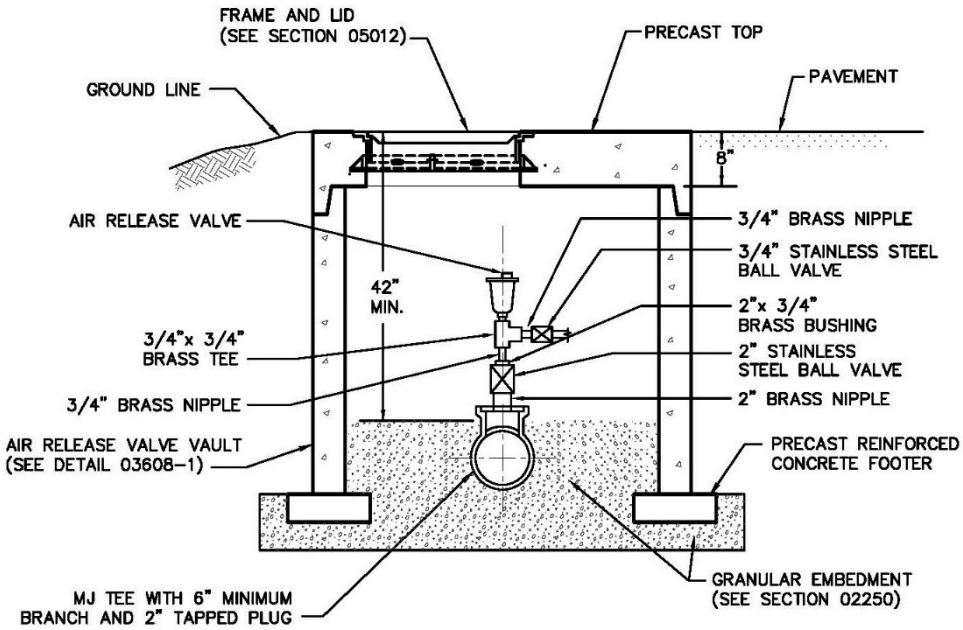

NOTES:

1. THE ABOVE PIPING, FITTING, AND VALVES ARE FOR MAINS 12 INCHES AND SMALLER.
2. FOR VAULT SEE DETAIL 03608-1.
3. ALL NIPPLES ARE TO BE BRASS.

TYPICAL AIR RELEASE
12" MAINS AND SMALLER

WATER SERVICES
CITY OF KANSAS CITY, MISSOURI
DRAWING NO. 02641-1

DEVELOPED BY: TECHNICAL ADVISORY COMMITTEE
APPROVED BY:
DATE: 12/17/2020

1 OF 1

DETAIL 02641-2

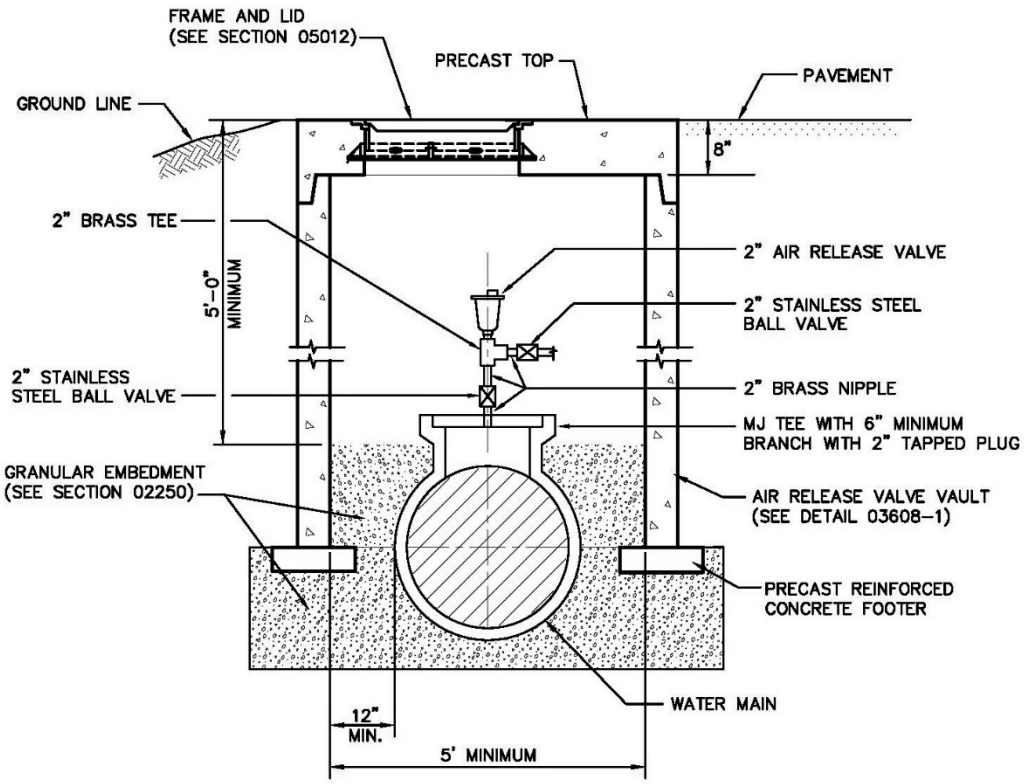

NOTES:

1. THE ABOVE PIPING, FITTINGS AND VALVES ARE FOR MAINS 16 INCHES AND LARGER.
2. FOR VAULT SEE DETAIL 03608-1.
3. ALL NIPPLES ARE TO BE BRASS.

TYPICAL AIR RELEASE
16" MAINS AND LARGER

WATER SERVICES
CITY OF KANSAS CITY, MISSOURI
DRAWING NO. 02641-2

DEVELOPED BY: _____ APPROVED BY: _____
TECHNICAL ADVISORY COMMITTEE DATE: 12/16/2020

1 OF 1

DETAIL 02641-2a

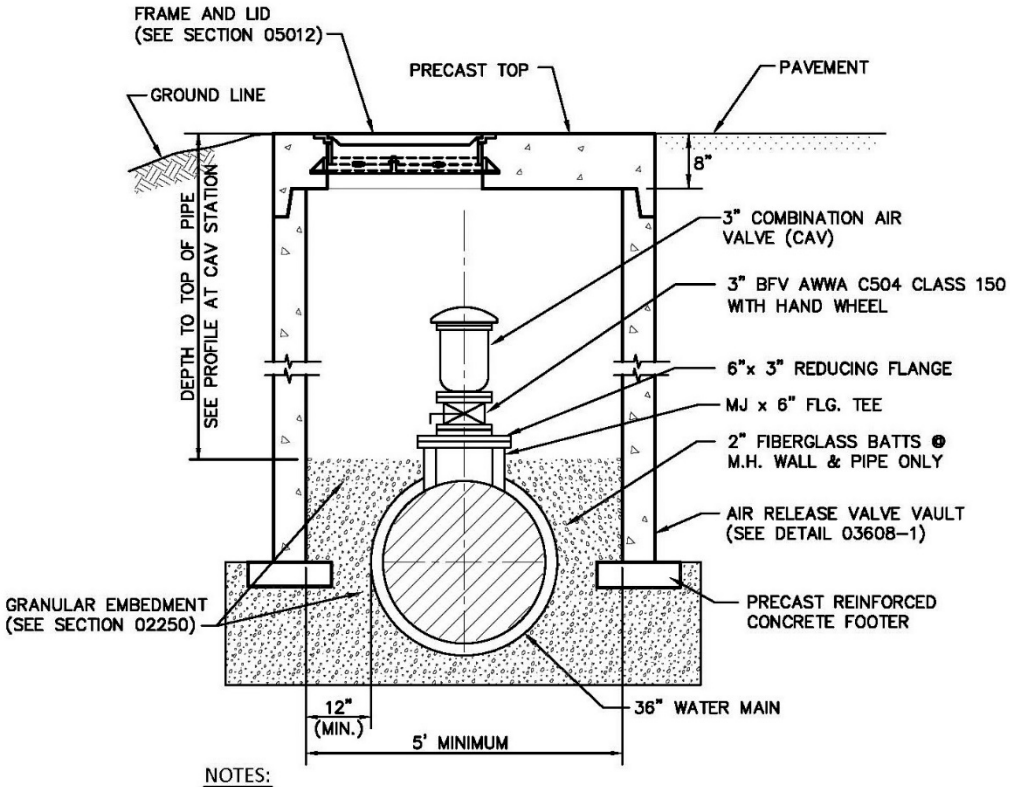

NOTES:

1. FOR VAULT DETAILS, SEE SECTION 03608-1, KCMO WSD STANDARDS AND SPECIFICATIONS AND ASTM C478. TOP, RISER, & FOOTERS, SHALL BE SUITABLE FOR TRAFFIC CONDITIONS AND DESIGNED TO MEET H-20 WHEEL LOAD REQUIREMENTS.
2. BRASS PIPING SHALL BE ASTM B43, EXTRA STRONG W/ ASME 816.1 CLASS 250 FITTINGS.
3. CAV TO BE A.R.I. FLOW CONTROL CAV MODEL NO. D-060-C HF OR APPROVED EQUAL.
4. WHERE VAULT IS INSTALLED OUTSIDE OF PAVEMENT LIMITS, PROVIDE MINIMUM 12" OF SOIL ABOVE VAULT TOP FOR RESTORATION OF GRASS OR LANDSCAPE FEATURES AND GRADE TO MATCH ADJACENT EXISTING SURFACE.

TYPICAL AIR RELEASE 3" ARVs & CAVs
TYPE "A" SETTING 16" MAINS AND LARGER

WATER SERVICES
CITY OF KANSAS CITY, MISSOURI
DRAWING NO. 02641-2a

DEVELOPED BY: _____ APPROVED BY: _____
TECHNICAL ADVISORY COMMITTEE DATE: 12/17/2020

1 OF 1

DETAIL 02641-2b

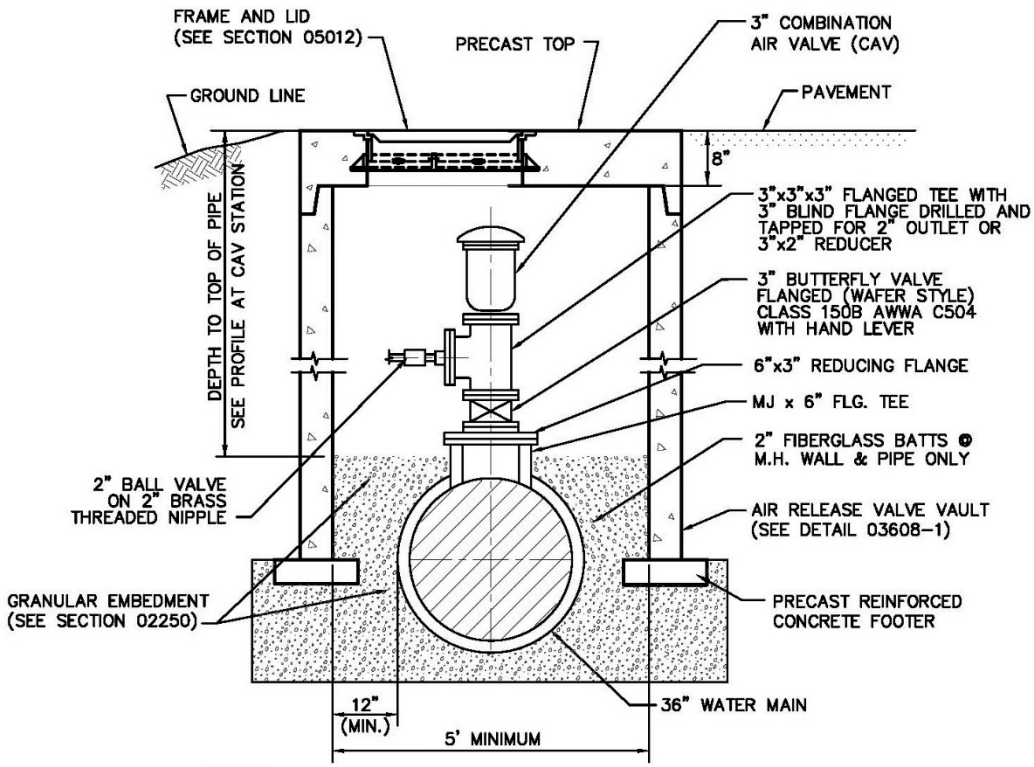

NOTES:

1. FOR VAULT DETAILS, SEE SECTION 03608-1, KCMO WSD STANDARDS AND SPECIFICATIONS AND ASTM C478. TOP, RISER, & FOOTERS, SHALL BE SUITABLE FOR TRAFFIC CONDITIONS AND DESIGNED TO MEET H-20 WHEEL LOAD REQUIREMENTS.
2. BRASS PIPING SHALL BE ASTM B43, EXTRA STRONG W/ ASME 816.1 CLASS 250 FITTINGS.
3. CAV TO BE A.R.I. FLOW CONTROL CAV MODEL NO. D-060-C HF OR APPROVED EQUAL.
4. WHERE VAULT IS INSTALLED OUTSIDE OF PAVEMENT LIMITS, PROVIDE MINIMUM 12" OF SOIL ABOVE VAULT TOP FOR RESTORATION OF GRASS OR LANDSCAPE FEATURES AND GRADE TO MATCH ADJACENT EXISTING SURFACE.

TYPICAL AIR RELEASE 3" ARVs & CAVs
TYPE "B" SETTING 16" MAINS AND LARGER

WATER SERVICES
CITY OF KANSAS CITY, MISSOURI
DRAWING NO. 02641-2b

DEVELOPED BY: _____ APPROVED BY: _____
TECHNICAL ADVISORY COMMITTEE DATE: 12/17/2020

1 OF 1

DETAIL 02641-3

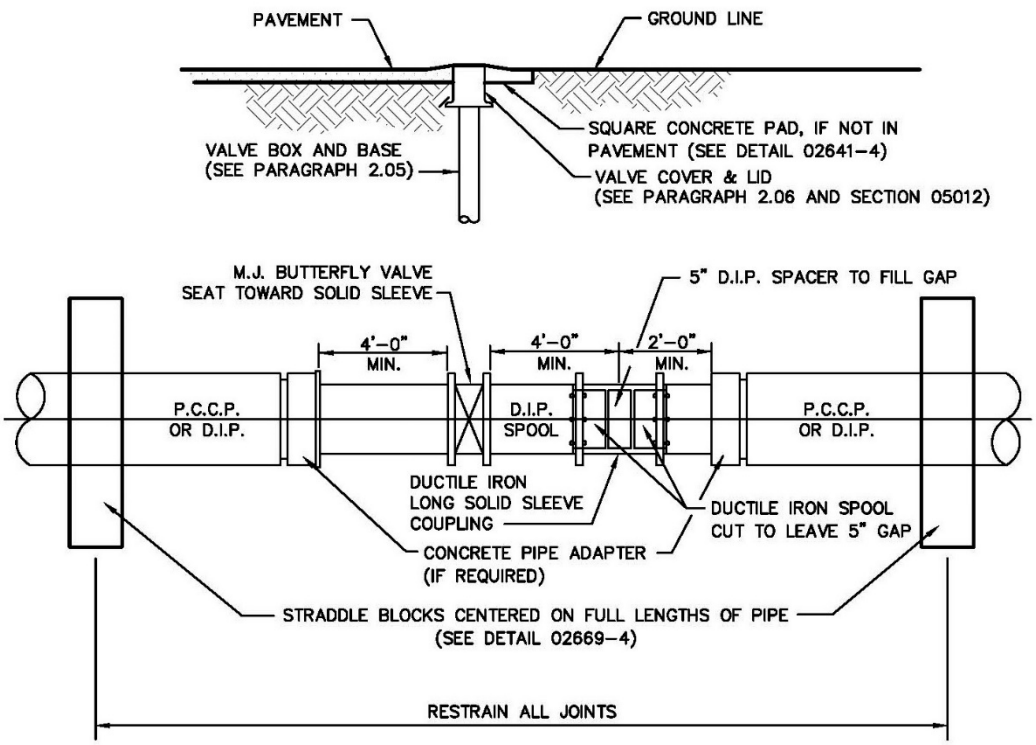

NOTES:

1. TORQUE LIMITERS TO BE PLACED ON ALL BUTTERFLY VALVES.
2. ALL PIPE AND BOLTS TO BE PAINTED WITH ONE COAT COAL TAR EPOXY AFTER ASSEMBLY.
3. RESTRAIN ALL JOINTS BETWEEN STRADDLE BLOCKS.

TYPICAL BUTTERFLY VALVE INSTALLATION

WATER SERVICES
CITY OF KANSAS CITY, MISSOURI

DRAWING NO. 02641-3

DEVELOPED BY: TECHNICAL ADVISORY COMMITTEE

APPROVED BY:

DATE: 12/16/2020

1 OF 1

Detail 02641-4

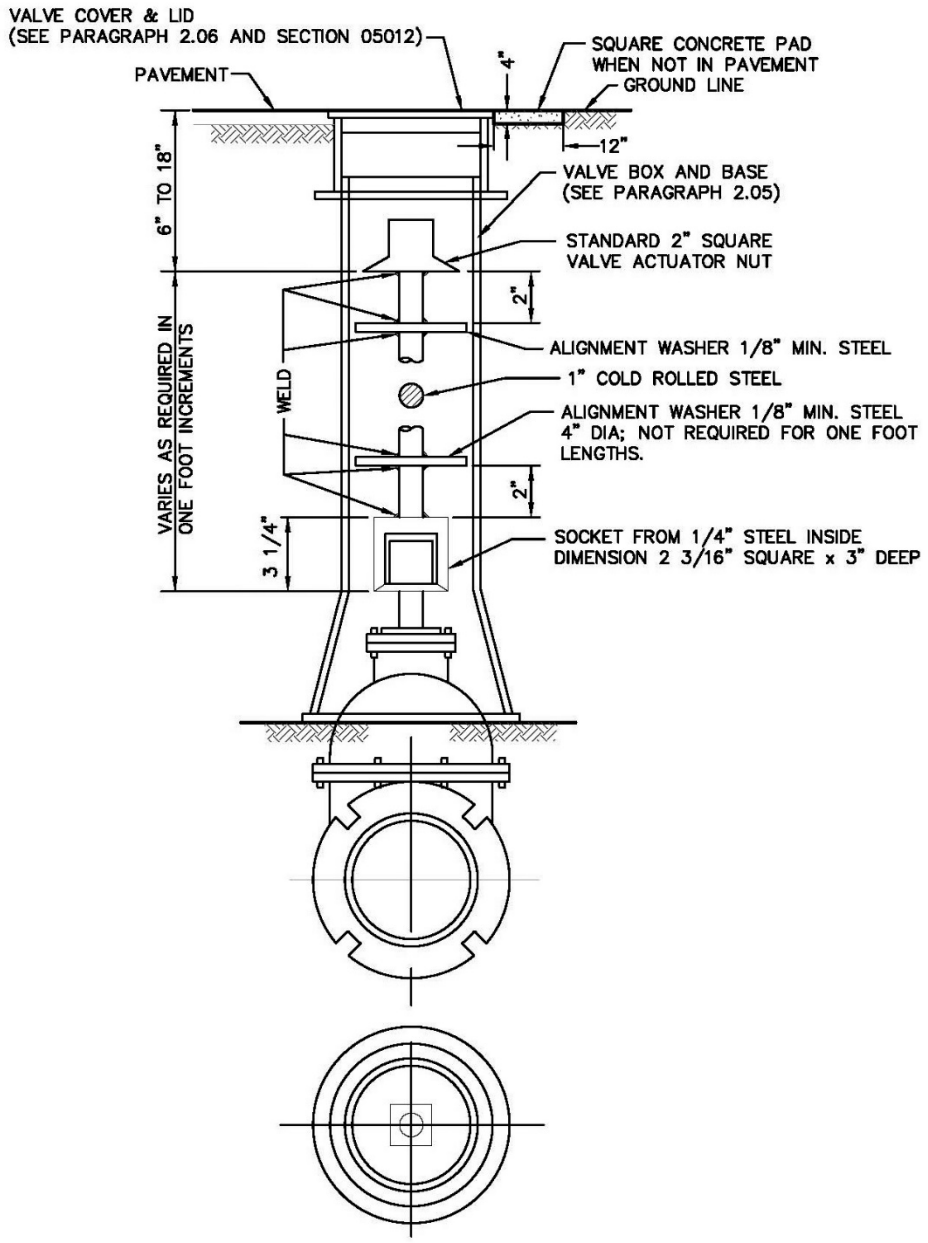

ACTUATOR NUT EXTENSION

WATER SERVICES
CITY OF KANSAS CITY, MISSOURI
DRAWING NO. 02641-4

DEVELOPED BY: TECHNICAL ADVISORY COMMITTEE
APPROVED BY:
DATE: 12/17/2020

1 OF 1

END OF SECTION

SECTION 02645 – HYDRANTS AND FLUSHING ASSEMBLIES

PART 1 - GENERAL

1.01 SUMMARY

A. This section provides requirements for the furnishing and installation of hydrants and flushing assemblies.

1.02 SPECIFICATION MODIFICATIONS

A. It is understood that throughout this section these Specifications may be modified by appropriate items in Section 01015 – Specific Project Requirements or as otherwise indicated on the Contract Drawings.

1.03 RELATED SECTIONS

A. Section 01000 – General Project Requirements.
B. Section 01015 – Specific Project Requirements.
C. Section 01300 – Submittals.
D. Section 02250 – Trenching, Pipe Embedment and Backfill.
E. Section 02618 – Ductile Iron Pipe Water Mains.
F. Section 02669 – Thrust Restraints.

1.04 CODES AND STANDARDS

A. The publications listed below form a part of this specification to the extent referenced. The publications are referred to within the text by the basic designation only.
B. American Water Works Associations (AWWA):

AWWA C111/A21.11-17	Rubber-Gasket Joints for Ductile-Iron Pressure Pipe and Fittings.
AWWA C502	Dry-Barrel Fire Hydrants.

1.05 DEFINITIONS

A. Bury line: The location on the lower barrel of the hydrant that intersects with the finished grade.
B. Cover: The distance from the ground line to the top of the connecting pipe.
C. Hydrant Trench Depth: The distance from the bottom of the hydrant base to the finished grade (bury line).

1.06 MATERIALS PROVIDED BY THE CITY

A. Materials provided by the City shall be as indicated in Section 01015 – Specific Project Requirements.

1.07 SUBMITTALS

A. Submit as specified in Section 01300 – Submittals and as required herein.
B. Shop Drawings:
   1. Hydrants.
C. Product Data:
   1. Submit catalog cuts and dimension data.

D. Other Submittals:
   1. Manufacturer's experience as requested by City.

1.08 QUALITY ASSURANCE

A. The Contractor is responsible for the quality assurance and quality control of the Work.
B. Manufacturer:
   1. The manufacturer shall be a company specializing in manufacturing the Products specified in this Section with a minimum of five years manufacturing experience of the specified Products.
   2. Manufacturer shall prove that their Products have been in reliable service for at least five (5) years.

1.09 PRODUCT DELIVERY, STORAGE AND HANDLING

A. Follow the provisions for delivery, storage, protection, and handling Products to the site and on site as provided in Section 01000 – General Project Requirements.
B. After the units on site, inspect for damage and inventory.
C. Packaging:
   1. All hydrants shall be bundled in a group no larger than three (3) hydrants wide by three (3) hydrants high. All hydrants shall be shipped with the hydrant base inlet pointing down. All hydrants shall be separated wood framing adequate to prevent the hydrants from touching the ground or each other. Binding the hydrants together shall be a band or wrap adequate to per handling of the hydrant bundles with a crane truck or a forklift. All hydrants shall be delivered with the hydrant nozzle cap installed.
D. Delivery:
   1. The Yard Store shall receive a notice of shipping at least 2 days prior to shipping the hydrants. All hydrants shall be delivered to the Yard Store, 2409 E. 18th Street, Kansas City, Missouri, 64127. Before payment is made on all deliveries, Engineering may be notified and the shipment inspected by Engineering or their designee for compliance with this specification.

PART 2 - PRODUCTS

2.01 APPROVED HYDRANT MANUFACTURERS AND MODEL

A. Medallion Hydrant, as manufactured by Clow Valve Company.
B. Regent 129i, as manufactured by M&H Valve Company.
C. Super Centurion 200, as manufactured by Mueller Company.
D. QPL245 Nostalgic Style Fire Hydrant – Model 2760, as manufactured by American AVK Company.
E. WaterMaster as manufactured by EJ Company.

2.02 HYDRANTS

A. Hydrants shall be the current Kansas City, Missouri pattern hydrants manufactured specifically for the City of Kansas City, Missouri.
B. No changes or modifications to an approved hydrant shall be made by the hydrant manufacturer without prior written approval from the City.

C. All hydrants shall be designed and manufactured in strict compliance with AWWA C502 unless otherwise approved.
D. All hydrants shall be the traffic model type that incorporates a breakaway or traffic flange.
E. Pump nozzle: hydrants shall have one (1) pumper nozzle located in the horizontal plane.
F. The upper barrel and lower barrel shall be sealed by an EPDM rubber gasket or O-ring.
G. Hydrant base:
    1. The hydrant base shall be provided with a mechanical joint inlet to accommodate 6-inch diameter ductile iron pipe, in accordance with AWWA C111.
    2. The hydrant shall be supplied with necessary accessories for the mechanical joint.
H. Main valve of the hydrant shall be 5-1/4-inch diameter compression type, which closes with water pressure.
I. Operating nut:
    1. The operating nut shall be a truncated pentagon, 1-1/2 inches on the bottom, 1-7/16 inches on the top, with a finished height of 1-1/8 inches. See Detail 02645-5 – Operating Nut (Stem Nut).
J. Bonnet:
    1. The bonnet shall be so constructed that the opening nut shall not travel during opening and closing the hydrant.
    2. The bonnet shall house a Viton gasket or O-ring seal between the opening nut and the bonnet to prevent moisture and foreign material from entering the lubricant reservoir.
    3. The bonnet shall also house Viton gasket or O-ring seal between the bonnet and the upper stem to retain the lubricant in the reservoir.
K. Tamper proof shield: the hydrant shall be supplied with a tamper resistant shield for the operating nut. The shield shall be in accordance with the detail, 02645-6 – Security Style Hold Down Nut.
L. Direction of operation: the hydrant shall open by turning the operating nut to the right (in a clockwise direction when viewing the hydrant from above).
M. Pumper nozzle threads:
    1. The pumper nozzle threads shall be in accordance with the Federal Screw Thread Standard H28, Section 10, American National Hose Coupling and Fire Hose Coupling Threads.
    2. The pumper nozzle shall have right-hand threads and have a 4-inch nominal diameter with 4 (four) threads per inch.
    3. The nozzle threads shall be lightly greased from factory with a suitable food grade lubricant.
N. Nozzle Cap:
    1. Nozzle cap shall be cast iron and shall be furnished with a synthetic rubber installed in a retaining groove in the inside of the cap.
    2. The dimensions and shape of the nozzle cap nut shall be the same as the operating nut as shown on Detail 02645-5 – Operating Nut (Stem Nut), except with a finished height of 1-inch.

O. Exterior Coatings:
   1. The exterior of the hydrant above the bury line, nozzle caps, the bonnet, hydrant extensions and the hydrant base shall be powder coated with epoxy or Triglycidyl Isocyanurate (TGIC) polyester.
   2. If epoxy powder is used, it shall be top-coated with a UV resistant, high-gloss acrylic polyurethane paint.
   3. The exterior of the hydrant below the bury line shall be coated with an asphalt varnish with a film thickness of at least 10 mils.
P. Hydrant Color Coding:
   1. Manufacturer applied coatings shall comply with paragraph EXTERIOR COATINGS.
   2. Barrel section of the hydrant:
      (a) Manufacturer-applied.
      (b) International Orange.
      (c) Gloss finish.
   3. Hydrant extensions:
      (a) Manufacturer-applied.
      (b) International Orange.
      (c) Gloss finish.
   4. Nozzle caps:
      (a) Manufacturer applied.
      (b) Black.
      (c) Gloss finish.
   5. Bonnet sections:
      (a) Manufacturer applied:
         (i) Black.
         (ii) Gloss finish.
      (b) Field painted bonnet sections:
         (i) Reference paragraph HYDRANT INSTALLATION.
         (ii) Hydrants connected to mains less than 6-inches.:
            a. Contractor applied.
            b. Red (Krylon 5814 or approved equal).
            c. Gloss finish.
         (iii) Hydrants connected to mains equal to 6-inches and less than 12-inches:
            a. Manufacturer applied black, gloss finish.
         (iv) Hydrants connected to mains 12-inches or larger mains:
            a. Contractor applied.
            b. Green (Krylon 5816 or approved equal).
            c. Gloss finish.
   6. This color-coding is intended to provide firefighters and other emergency workers a permanent, quick visual reference to indicate the size of water main connected to each hydrant.
Q. Interior Coatings:
   1. All non-thread, non-machines interior surfaces of the hydrant base shall be coated with a wet-applied NSF 61 certified white potable epoxy (such as Tnemec 20-AA90) or powder coated with an NSF 61 certified white epoxy.

R. Hydrant Extensions:
   (a) Hydrant extensions (spool pieces), if shown on the Drawings or requested and approved by the City, shall be a complete assembly allowing for the hydrant's height to be adjusted in six (6) inch increments.
   (b) The assembly shall be furnished with instructions and all required accessories necessary to adjust the height of the hydrant and maintain the hydrant's traffic feature.
   (c) Hydrant extensions shall be coated in accordance with paragraphs EXTERIOR COATINGS and HYDRANT COLOR CODING.

S. External Hardware:
   1. All external hardware shall be 304 or 316 stainless steel.
   2. The lower hydrant stem from the break-away coupling to the main valve and any attaching hardware securing the main valve assembly to the lower stem shall be 304 or 316 stainless steel. Any cross pins securing any part of the main valve assembly or break away stem coupler shall be 420 stainless steel. The lower stem nut may be integral to the lower valve plate or main valve assembly.
   3. Main Valve Assemblies:
      (a) Main valve assemblies shall be of either three-piece (upper valve plate, main valve seat, lower valve plate) or one-piece EPDM encapsulated ductile iron design.
      (b) The lower valve plate of three-piece design main valve assemblies shall be powder coated with an NSF 61 certified epoxy.
   4. Seat Ring:
      (a) The upper surface of the seat ring shall have raised lugs allowing for positive engagement of a hydrant disassembly tool.
      (b) The raised lugs shall be of sufficient design to allow for the removal of the seat ring.

T. Shop Drawings:
   1. Prior to manufacturing the hydrants, the manufacture shall submit shop drawings for approval in accordance with paragraph SUBMITTALS.

2.03 FLUSHING ASSEMBLIES

A. Mechanical joint plug: Drilled and tapped for 2-inch standard pipe threads.
B. Elbows and outlet pipe: standard weight galvanized pipe and fittings.
C. All discharge piping shall have a 2-inch PVC cap on top.

2.04 POLYETHYLENE ENCASEMENT

A. As specified in Section 02618 – Ductile Iron Pipe Water Mains.

PART 3 - EXECUTION

3.01 EXCAVATION

A. Excavation shall be in conformance with Section 02250 – Trenching, Pipe Embedment and Backfill.

3.02 HYDRANT INSTALLATION

A. Layout:
   1. The Contractor shall locate the installation point of each hydrant as shown on the Drawings.
   2. Hydrants shall be installed so that there is a minimum clear area of 5 feet in all directions to allow for operation of hydrant. Notify City's representative if the minimum clear distance cannot be met.
   3. The Contractor shall furnish all labor and material in laying out the work.
   4. The Contractor shall be responsible for setting all offset stakes that may be required.
   5. If it is necessary to change the location of a hydrant from that shown on the Drawings, then the City shall approve the staked location of each hydrant before its installation.

B. The weep holes of the hydrant shall be kept clear and free to drain.

C. Place 1-½ cubic yards of stone fill as indicated on the standard details.

D. Hydrant Trench Depth: Five (5) feet unless otherwise indicated.

E. Hydrants shall stand plumb.

F. When placed along roadways the centerline of the hydrant shall be as follows:
   1. A minimum of twenty-four (24) inches from the back of the curb.
   2. A minimum of 4 feet from the edge of pavement where no curb exists.

G. Setting of Hydrants:
   1. Hydrants shall be set so that the breakaway (traffic) flange is installed at the manufacturer's recommend height above finished grade (which is the top of the pavement in paved areas).
   2. Unless otherwise indicated on the Drawings the Contractor shall set the height of the traffic flange as follows:
      (a) Using an offset fitting or other combination of fittings between the valve and hydrant base.
   3. Fittings shall be as specified in Section 02618 – Ductile Iron Pipe Water Mains.

H. Hydrants shall not be set in a drainage ditches.

I. Hydrant shall be rotated so as to have the nozzle facing the street. If site conditions dictate, at the direction of the City, the hydrant shall be rotated to face another direction.

J. Hydrants are to be installed with mechanical joint anchoring fittings or approved restraint devices. Refer to Section 02669 – Thrust Restraints.

K. Hydrants are to be installed in accordance with the following standard Construction Detail Drawings:
   1. 02645-1 – Typical Hydrant Installation with 90 Degree Bend (Type "A" Setting).
   2. 02645-2 – Straight Set Hydrant Installation (Type "B" Setting).
   3. 02645-3 – Typical Hydrant Set in Back-slope.

L. After installation and before hydrants are placed in service, Contractor shall field apply two separate coats of all surface spray enamel paint, in accordance with paint manufacturers recommendations, to completely cover each hydrant bonnet in accordance with paragraph HYDRANT COLOR CODING.

M. After installation and before hydrants are placed in service, Contractor shall temporarily cover each hydrant with polyethylene encasement. Polyethylene encasement shall be securely attached to the hydrant. Inactive hydrants are to be covered so that the Fire Department knows the hydrants are not in service.

3.03 FLUSHING ASSEMBLIES

A. Flushing assemblies shall be installed in accordance with the following standard Construction Detail Drawings:
   1. 02645-4 – Typical Flushing Assembly, 12-inch Mains and Smaller.

3.04 POLYETHYLENE ENCASMENT

A. Polyethylene encasement shall be installed on all ductile iron pipe, fittings, valves and other appurtenances including the hydrant sets.
B. Install polyethylene encasement in accordance with Section 02618 – Ductile Iron Pipe Water Mains, paragraph POLYETHYLENE ENCASEMENT.
C. Install polyethylene encasement to the bury line of fire hydrants.
D. Cut holes in the polyethylene encasement at the base of fire hydrants to allow drainage from the weep holes into the underlying stone fill.

3.05 BACKFILL AND COMPACTION

A. The areas around each hydrant valve shall be thoroughly compacted to prevent settlement of these areas.
B. Backfill and compaction shall be in accordance with Section 02250 – Trenching, Pipe Embedment and Backfill.

DETAILS ON THE NEXT SIX PAGES

DETAIL 02645-1

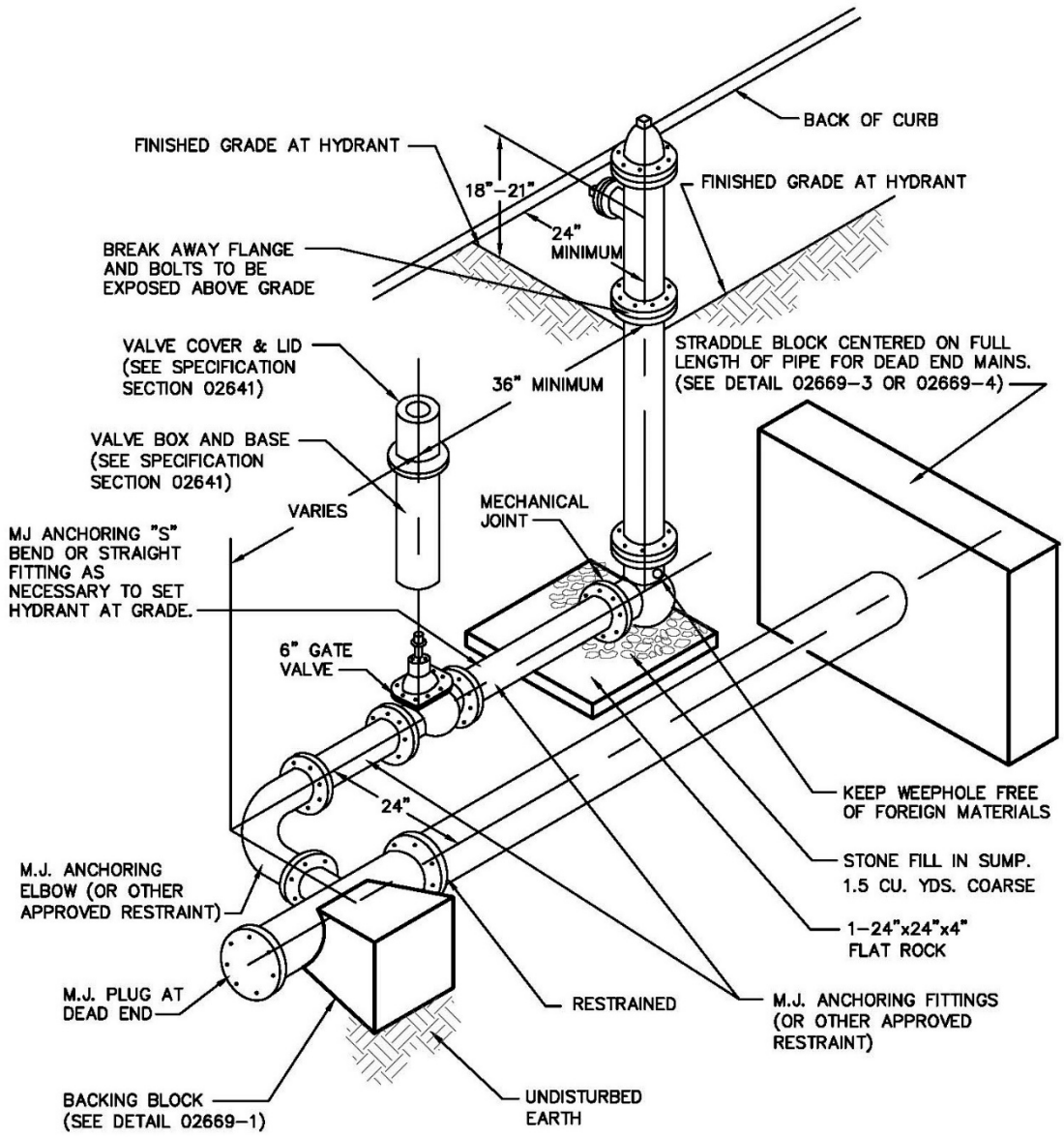

TYP. HYDRANT INSTALL. WITH 90° BEND
(TYPE "A" SETTING)

WATER SERVICES
CITY OF KANSAS CITY, MISSOURI
DRAWING NO. 02645-1

DEVELOPED BY: TECHNICAL ADVISORY COMMITTEE
APPROVED BY:
DATE: 12/10/2020

1 OF 1

DETAIL 02645-2

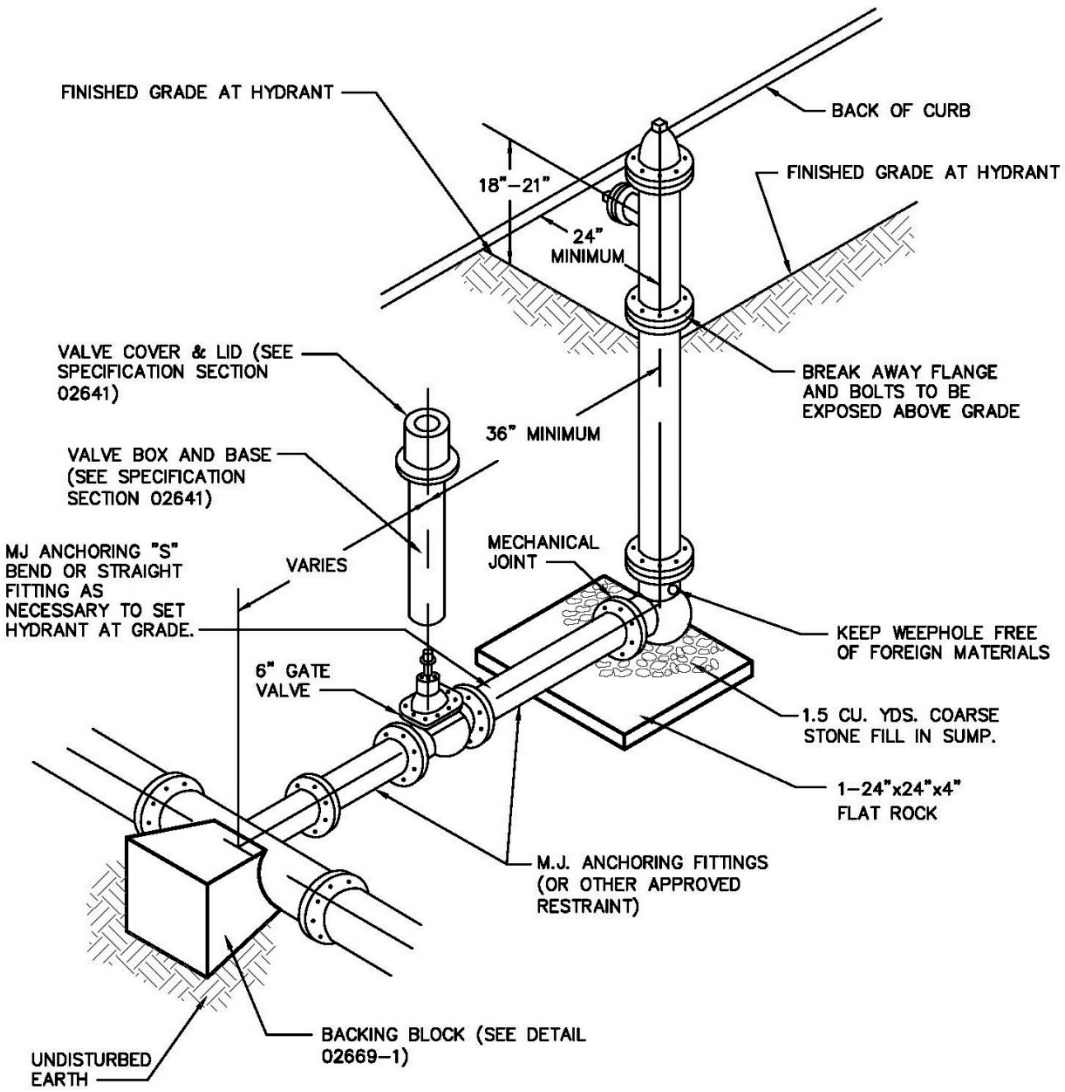

STRAIGHT SET HYDRANT INSTALLATION
(TYPE "B" SETTING)

WATER SERVICES
CITY OF KANSAS CITY, MISSOURI
DRAWING NO. 02645-2

DEVELOPED BY: TECHNICAL ADVISORY COMMITTEE
APPROVED BY:
DATE: 12/17/2020

1 OF 1

DETAIL 02645-3

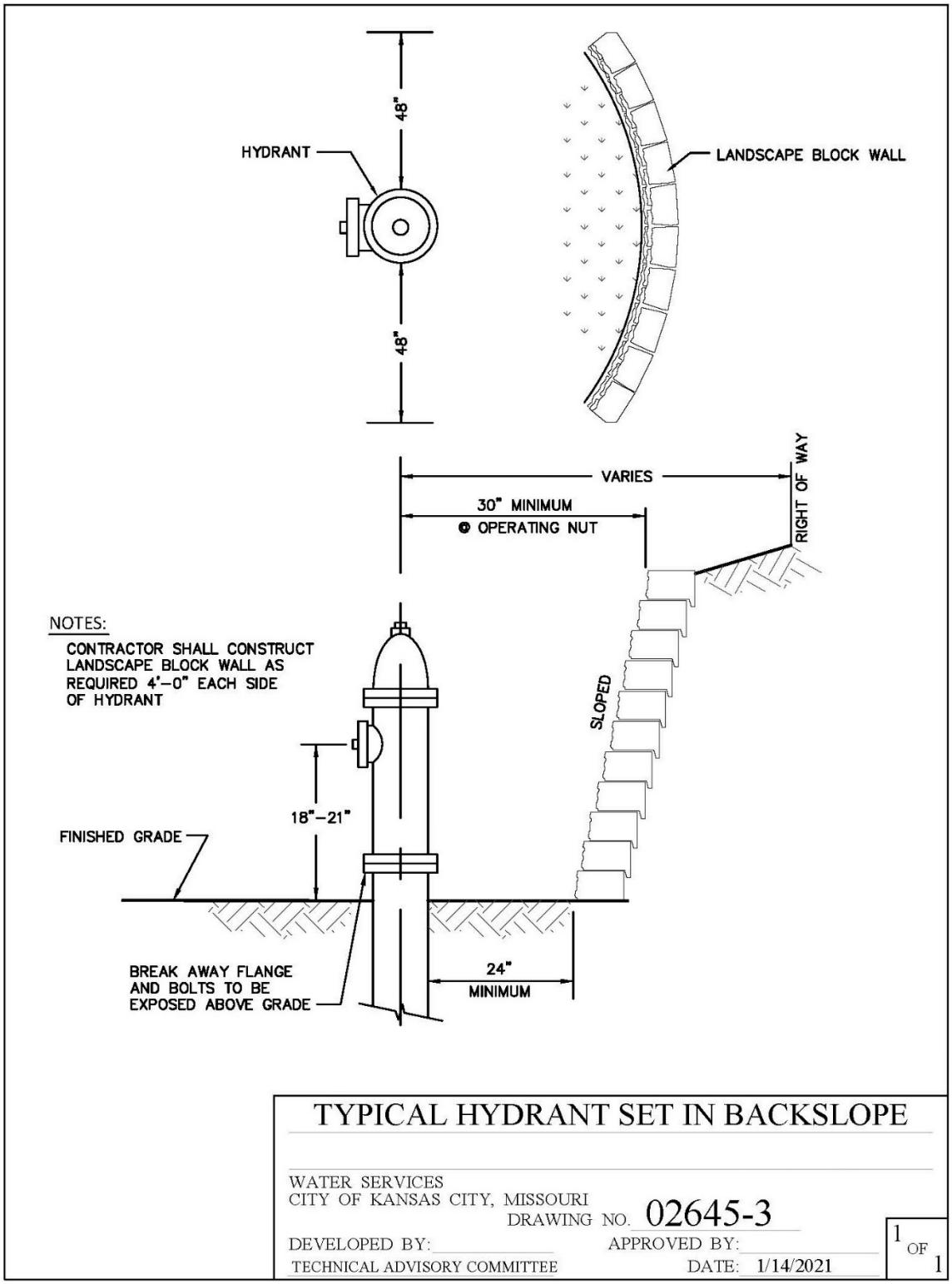

DETAIL 02645-4

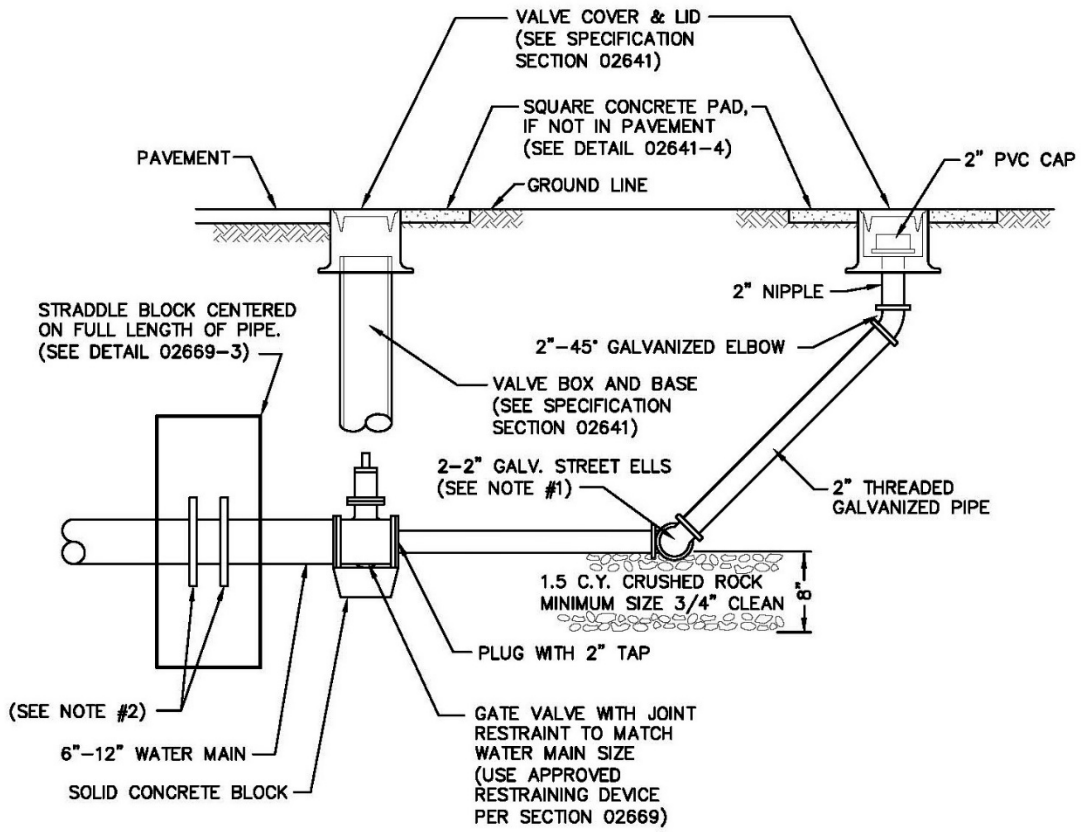

NOTES:

1. DRAINAGE SHOULD BE PROVIDED BY 1/2" HOLE IN STREET ELL.
2. USE APPROVED RESTRAINING DEVICES (OPPOSITE FACING) PER SECTION 02669.

TYPICAL FLUSHING ASSEMBLY
12" MAINS AND SMALLER

WATER SERVICES
CITY OF KANSAS CITY, MISSOURI
DRAWING NO. 02645-4

DEVELOPED BY: TECHNICAL ADVISORY COMMITTEE
APPROVED BY:
DATE: 1/28/2021

1 OF 1

DETAIL 02645-5

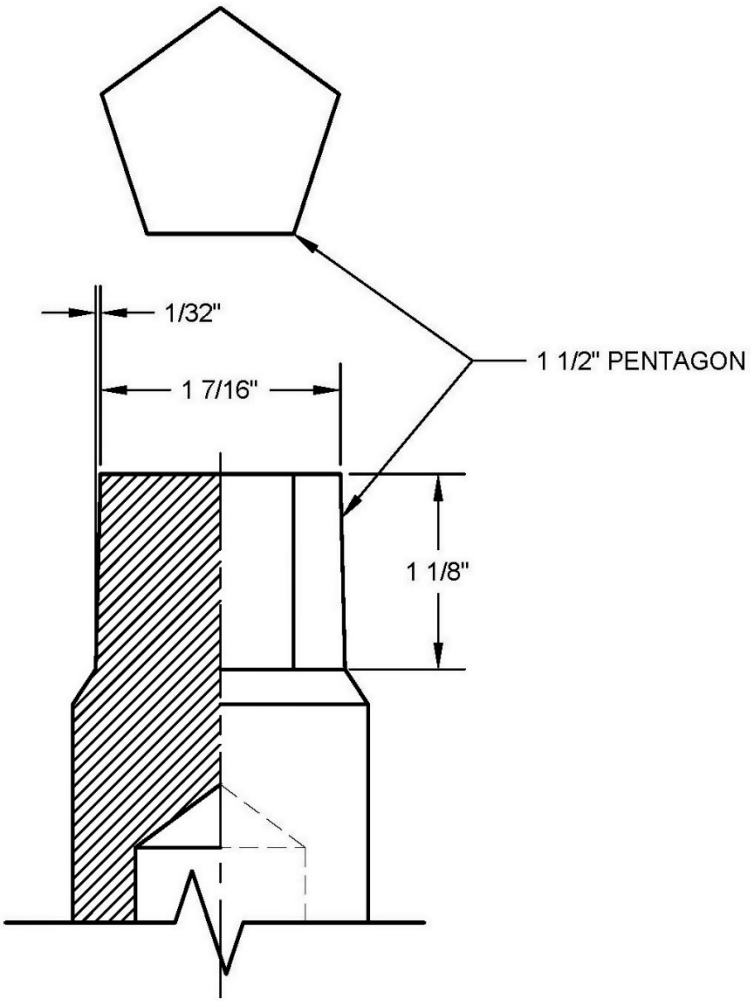

OPERATING NUT (STEM NUT)

WATER SERVICES
CITY OF KANSAS CITY, MISSOURI
DRAWING NO. 02645-5

DEVELOPED BY: _____ APPROVED BY: _____
TECHNICAL ADVISORY COMMITTEE DATE: 12/16/2020

1 OF 1

Detail 02645-6

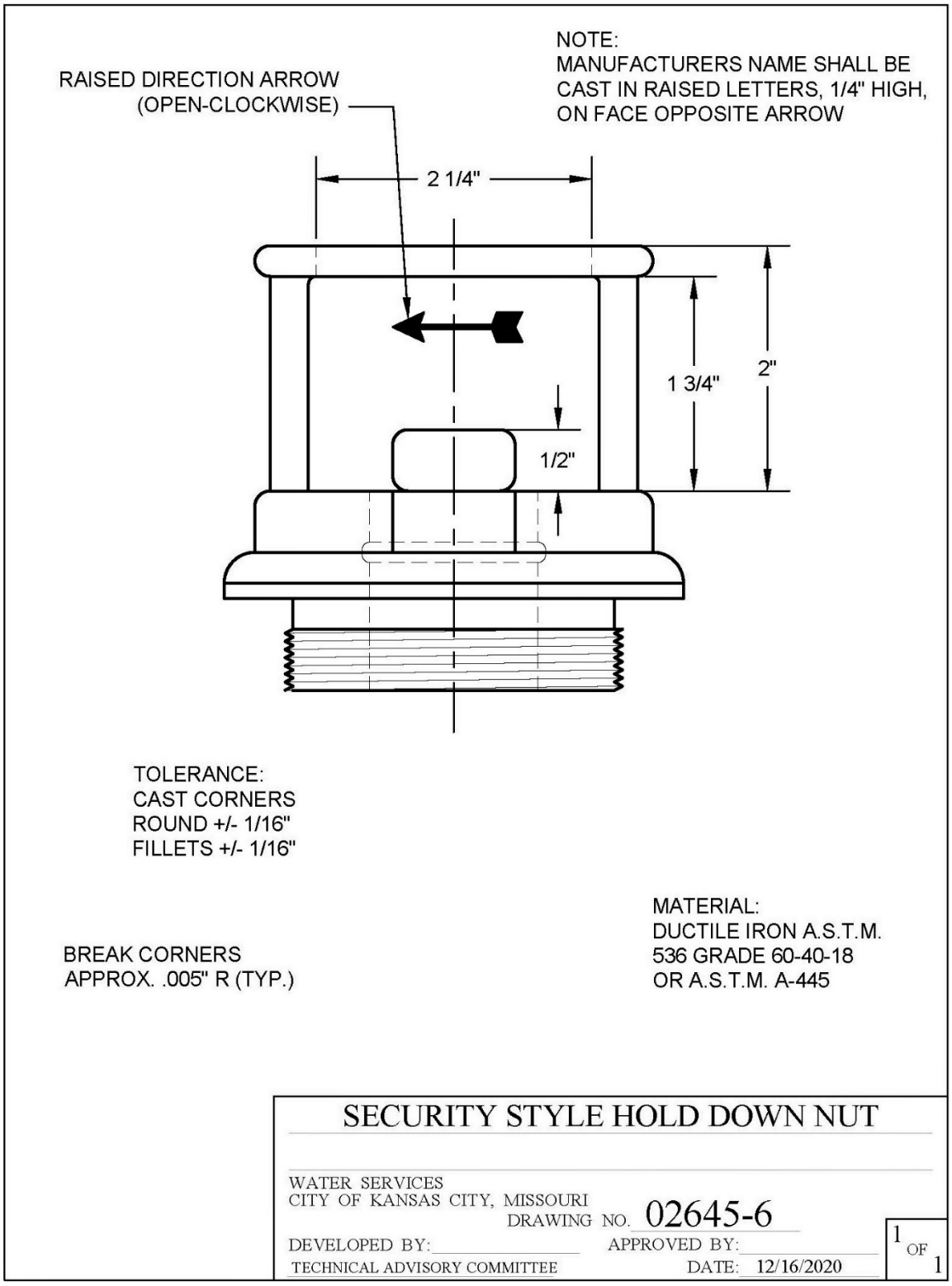

END OF SECTION

SECTION 02669 – THRUST RESTRAINTS

PART 1 - GENERAL

1.01 SUMMARY

A. This section provides for the required restraining devices to prevent the movement of pipe and fittings.
B. This section includes Restrained Joints and Concrete Blocking (backing blocks and straddle blocks).
C. The specifications for concrete and appurtenances provided in this section only pertain to thrust restraint of water mains.

1.02 SPECIFICATION MODIFICATIONS

A. It is understood that throughout this section these Specifications may be modified by appropriate items in Section 01015 – Specific Project Requirements, or as otherwise indicated on the Contract Drawings.

1.03 RELATED SECTIONS

A. Section 01000 – General Project Requirements.
B. Section 01015 – Specific Project Requirements.
C. Section 01300 – Submittals.
D. Section 01566 – Cleanup Operations.
E. Section 02618 – Ductile Iron Pipe Water Mains.
F. Section 02619 – Pre-stressed Concrete Cylinder Pipe Water Mains.

1.04 CODES AND STANDARDS

A. The publications listed below form a part of this specification to the extent referenced. The publications are referred to within the text by the basic designation only.
B. American Society for Testing and Materials (ASTM):

ASTM A615	Standard Specification for Deformed and Plan Carbon-Steel Bars for Concrete Reinforcement.
ASTM A616	Standard Specification for Rail-Steel Deformed and Plan Carbon-Steel Bars for Concrete Reinforcement.

C. City of Kansas City, Missouri Department of Public Works Construction and Material Specifications (http://kcmo.gov/publicworks/design-construction-standards/):

KCMO PW 2208	Subsection Section 2208, Portland Cement Concrete Pavement.

1.05 INFORMATION PROVIDED BY THE CITY

A. As provided in the Contract Documents.

1.06 SUBMITTALS

A. Submit as specified in Section 01300 – Submittals.
B. Shop Drawings:
   1. Submit shop drawings and descriptive details showing the size, length, and location of each fitting and adjacent pipe, and the details of all anchorage and harnessing proposed.

C. Other:
   1. Concrete Mix Design. See paragraph 2.04, part A.

1.07 QUALITY ASSURANCE

A. The manufacturer shall be a company specializing in manufacturing the Products specified in this section with minimum three (3) years documented experience.

1.08 PRODUCT DELIVERY, STORAGE AND HANDLING

A. Follow the provisions for the delivery, storage, protection and handling products to and on site as provided in Section 01000 – General Project Requirements.
B. Concrete Mix Design: In accordance with KCMO PW 2208, a mix design, for all concrete mixes to be used, shall be submitted to the City in accordance with paragraph SUBMITTALS. As a minimum the following information must be in the Quality Management file for the plant or included with the mix design:
   1. Mix design designation required by project.
   2. Project name, location, project number and date.
   3. Name and location of ready mix plant or plants.
   4. List the source and type of all materials from each plant supplying mix.
   5. CA and FA Sieve Analysis and quality checks from each plant supplying mix. CA-Ledge, quarry or mine name and location. FA- Sand plant name, location and source (MO or Kaw River) (less than 6 months old).
   6. ASR test results (less than 2 years old).
   7. Durability Factor test results for CA (less than 2 years old).
   8. Cement chemical analysis.
   9. Specific gravity of all materials.
   10. The mix design shall be based on one cubic yard of concrete or one cubic meter if required.
   11. The mix design shall contain the weight and volume of each mix component (S.S.D.).
   12. The results of 28-day compressive strengths shall be submitted when requested by the City.

PART 2 - PRODUCTS

2.01 RESTRAINED PUSH-ON JOINTS FOR DUCTILE IRON PIPE

A. Flex-Ring® as manufactured by American Ductile Iron Pipe.
B. Fast-Grip® as manufactured by American Ductile Iron Pipe.
C. Super-Lock® as manufactured by McWane.
D. TR Flex® as manufactured by McWane.
E. Field Lok® as manufactured by McWane.
F. Snap-Lok® as manufactured by Griffin Pipe Products.

2.02 RESTRAINED MECHANICAL JOINTS FOR DUCTILE IRON PIPE

A. MEGALUG® as manufactured by EBAA Iron, Inc. MEGALUG.
B. Uni-Flange® as manufactured by The Ford Meter Box Company, Inc.
C. Restrained joint fittings: One Bolt.
D. Restrained mechanical joints shall not be used on plain end fittings.

2.03 RESTRAINED JOINTS FOR PCCP

A. As specified in Section 02619 – Pre-Stressed Concrete Cylinder Pipe Water Main.

2.04 CONCRETE BLOCKING

A. Concrete:
   1. Concrete shall conform to KCMO PW 2208 except as follows:
      (a) Limestone may be used as coarse aggregate.
      (b) Design strength of concrete shall be 4,500 psi or greater.
      (c) Slump shall be 4 inches.
      (d) Coarse Aggregate: 1-inch maximum.
      (e) Air entrainment admixture is required.
      (f) Water reducing admixture is required.
   2. Ready mix concrete shall be supplied by a plant approved by the KCMO Public Works Department according to the Ready Mix Concrete Quality Management Plan. Submit ready mix concrete plant information in accordance with paragraph SUBMITTALS.
   3. Submit concrete mix design in accordance with KCMO PW 2208.C and in accordance with the paragraph SUBMITTALS.

B. Water for mixing and curing concrete shall be potable.

C. Reinforcing Steel:
   1. Reinforcing steel bars shall conform to the requirements of the following Standards and Grades:
      (a) ASTM A615: Grade 40 or 60.
      (b) ASTM A616: Grade 50 or 60.

D. Forms:
   1. Suitable and substantial forms shall be provided. All forms shall be constructed and maintained plumb and true to line, securely braced, tied, clamped and shored, and tight enough to prevent leakage of concrete.
   2. Where applicable, undisturbed earth may be used in lieu of forms.
   3. The deflection of the forms due to the weight of plastic concrete, placing equipment, and workmen shall be accurately figured and taken into account in the design of the forms so that finished concrete members will have surfaces, lines, planes, and elevations required within tolerances in accordance with ACI 117.
   4. Forms for walls and thrust restraints shall be designed structurally for the rate of placement of concrete.
   5. All forms shall be removed prior to backfill unless the following conditions are met:
      (a) As directed by the City.
      (b) When constructed of unbrace plywood have a thickness of ½-inch or less, removal shall be optional unless otherwise directed by the City.
   6. Forms shall be constructed so that they can be removed without damage to the concrete.

E. Formwork Accessories:
   1. Forms shall be securely braced and tied with approved form ties that do not leave any parts within 3/4 inch of the surface of the concrete. Wire ties and wood spreaders will not be permitted.

PART 3 - EXECUTION

3.01 REACTION ANCHORAGE AND BLOCKING

A. Piping and fittings with push-on or mechanical joints, or similar joints subject to internal pressure shall be blocked, anchored, or harnessed to preclude separation of joints.

B. All push-on and mechanical joint bends deflecting 11-1/4 degrees or more shall be provided with suitable blocking, anchors, joint harness, or other acceptable means for preventing movement of the pipe caused by internal pressure.

C. Concrete backing blocks shall extend from the fitting to solid undisturbed earth and shall be installed so that all joints and bolts are accessible for repair.

D. Standard Dimensions and Details: The City's standard details for backing blocks are provided for three (3) ranges of soil resistance. The dimensions of backing blocks shall be as indicated on the following details:

1. 2,000 PSF Soil Resistance: Unless otherwise indicated on the Drawings or in Section 01015 – Specific Project Requirements, backing blocks shall be constructed in accordance with the following details:
   (a) Detail 02669-1 – Typical Backing Blocks for Tees and Plugs (2,000 PSF Soil Resistance).
   (b) Detail 02669-2 – Typical Backing Blocks for Horizontal Bends (2,000 PSF Soil Resistance).
   (c) Detail 02669-3 – Typical Straddle Block for 6 and 8-inch Pipe (2,000 PSF Soil Resistance).
   (d) Detail 02669-4 – Typical Straddle Block for 12 and 16-inch Pipe (2,000 PSF Soil Resistance).
   (e) Detail 02669-5 – Typical Straddle Block for 20, 24 and 30-inch Pipe (2,000 PSF Soil Resistance).
2. 2,500 PSF Soil Resistance: When the Design Professional can justify through geotechnical investigation, laboratory testing and analysis that the soil conditions within the project area meet or exceed a 2,500 pounds per square foot soil resistance, the backing blocks may be constructed in accordance with the following details. These details may only be used if noted on the Drawings or in Section 01015 – Specific Project Requirements:
   (a) Detail 02669-6 – Alternate Backing Blocks for Tees and Plugs (2,500 PSF Soil Resistance).
   (b) Detail 02669-7 – Alternate Backing Blocks for Horizontal Bends (2,500 PSF Soil Resistance).
   (c) Detail 02669-8 – Alternate Straddle Block for 6 and 8-inch Pipe (2,500 PSF Soil Resistance).
   (d) Detail 02669-9 – Alternate Straddle Block for 12 and 16-inch Pipe (2,500 PSF Soil Resistance).
   (e) Detail 02669-10 – Alternate Straddle Block for 20, 24 and 30-inch Pipe (2,500 PSF Soil Resistance).
3. 3,000 PSF Soil Resistance: When the Design Professional can justify through geotechnical investigation, laboratory testing and analysis that the soil conditions within the project area meet or exceed a 3,000 pounds per square foot soil resistance, the backing blocks may be constructed in accordance with the following details. These details may only be used only if noted on the Drawings or in Section 01015 – Specific Project Requirements:

(a) Detail 02669-11 – Alternate Backing Blocks for Tees and Plugs (3,000 PSF Soil Resistance).
(b) Detail 02669-12 – Alternate Backing Blocks for Horizontal Bends (3,000 PSF Soil Resistance).
(c) Detail 02669-13 – Alternate Straddle Block for 6 and 8-inch Pipe (3,000 PSF Soil Resistance).
(d) Detail 02669-14 – Alternate Straddle Block for 12 and 16-inch Pipe (3,000 PSF Soil Resistance).
(e) Detail 02669-15 – Alternate Straddle Block for 20, 24 and 30-inch Pipe (3,000 PSF Soil Resistance).

3.02 CONCRETE AND REINFORCING STEEL

A. Placing of Reinforcing Steel:
1. Before being installed in the final position, all metal reinforcements shall be free of mud, clay, ice, grease, oil, loose rust and scale, and other coatings that would reduce or destroy the bond.
2. Metal reinforcements shall be accurately formed and positioned to the required dimensions.
3. Steel reinforcements shall be accurately positioned as required and shall be secured against displacement by using annealed wire ties or suitable clips at all intersections.
4. The steel reinforcements shall be supported by metal supports, spacers, or hangers.
5. The legs on the metal chair supports shall be plastic coated.

B. Forms:
1. Verify lines, levels and centers before proceeding with formwork.
2. A coat of non-staining oil, lacquer, or other approved material shall be applied to protect form surface and to facilitate stripping. Coating shall be applied in strict accordance with the directions of the manufacturer.
3. Forms shall be removed in such manner as to assure the complete safety of the structure. In no case shall supporting forms or shoring be removed until the concrete has acquired sufficient strength.

C. Placing of Concrete:
1. Only those methods and arrangements of equipment shall be used which will reduce to a minimum any segregation of coarse aggregate from the concrete.
2. Every consideration shall be given to the proper placement of all concrete and the proper care of all concrete after placement.
3. Concrete shall be deposited into the forms or on the grade as nearly as practicable in its final position and in such manner that the concrete will completely fill the forms.
4. Vibration shall not be used to move concrete in a horizontal direction after initial placement.
5. Concrete that has partially hardened or has been contaminated by foreign material shall not be deposited in the Work and shall be removed from the Site at no additional cost to the City.
6. When inclined chutes beyond the mixer are permitted by the City, a baffle shall be provided at the bottom end so that concrete will drop vertically without segregation.

7. No water shall be added to the concrete for any reason at the job site that will result in exceeding the specified water-cement ratio.
8. Care shall be taken to assure proper concrete coverage of reinforcing steel as designed.
9. Placement operations shall be performed in such a manner as to prevent loose earth falling into the excavation during placement of concrete.
10. Concrete that might contact forms or reinforcing steel during placement shall be placed by the use of trunks or pipes whenever the drop exceeds six (6) feet for unexposed work, or three (3) feet for exposed work.
11. When trunks or pipe are used, they shall be located at horizontal spacing of not to exceed ten (10) feet.
12. Concrete for thrust restraints shall be placed in horizontal layers not exceeding two (2) feet in depth.
13. Placing of concrete in thrust restraints shall be done in such manner as to prevent "cold joints," both horizontally and vertically.

D. Vibrating:
1. Mechanical internal vibrators shall be used whenever possible in all formed concrete work.
2. Vibrators shall be inserted at uniform spacing of twelve (12) inches to twenty (20) inches to assure thorough consolidation of all concrete.
3. Vibrators shall be inserted and withdrawn vertically to a depth, which will assure penetration into the previous lift with vibration periods of from five (5) to fifteen (15) seconds.
4. Form vibration and/or hand spading will be required at points inaccessible for thorough internal vibration.
5. During placement of concrete, stand-by vibrators shall be immediately available in the event of mechanical failure in the vibrators being used.

E. Cleanup:
1. Cleanup shall conform to Section 01566 – Cleanup Operations, paragraph CONCRETE WORK.

3.03 RESTRAINED JOINTS

A. Use of restrained joints shall be as indicated on the Drawings.
B. Length of restrained joints shall be as indicated on the Drawings.
C. Differing subsurface or physical conditions: If the Contractor or City's Representative discovers during performance of the Work that support for a backing block against undisturbed soil cannot be obtained, then use of restrained joint pipe may be necessary. Refer to Section 00700 – General Conditions, Article 4:
1. The Contractor shall notify the City that a restrained joint may be required.
2. The Design Professional or the City shall provide the Contractor with the required length of restrained joints.
3. Calculations for the required length of restrained pipe shall be subject to approval by the City.

3.04 BACKFILL

A. To aid in the curing of concrete, a maximum of eight (8) inches of uncompacted backfill material may be placed over the concrete backing block.
B. No compaction shall occur or additional backfill placed over the backing block until the concrete has been in place for at least one (1) day.

3.05 SUPPORT FOR FITTINGS

A. Backing blocks, anchorages, or other supports for fittings installed in fills or other unstable ground, above grade, or exposed within structures, shall be provided as shown on the Drawings, required by the Construction Detail Drawings and as directed by the City.

3.06 EXTERIOR COATINGS

A. All clamps, rods, bolts, and other metal accessories used in reaction anchorages, or joint harness subject to submergence or contact with earth or other fill material and not encased in concrete shall be protected from corrosion by two coats of approved coal tar epoxy applied in the field to clean, dry metal surfaces. The first coat shall be dry and hard before the second coat is applied.

B. Metal surfaces exposed above grade or within vaults shall be painted with one prime coat and two finish coats of a paint acceptable to the City.

DETAILS 02669-1 THROUGH 02669-15
ARE ON THE FOLLOWING 15 PAGES

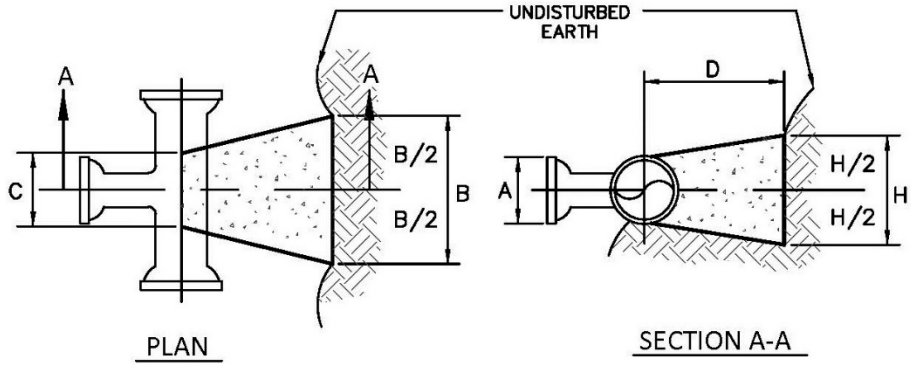

NOTES:

1. BACKING BLOCKS FOR PIPING SIZES UP THROUGH 12–INCH ARE BASED ON WORKING PRESSURE OF 175 P.S.I. PLUS 50% SURGE.
2. BACKING BLOCKS FOR PIPING SIZES 16–INCH THROUGH 24–INCH ARE BASED ON A WORKING PRESSURE OF 150 P.S.I. PLUS 50% SURGE.
3. THE PROJECT DESIGN PROFESSIONAL IS RESPONSIBLE FOR THE DESIGN OF THRUST BLOCKS. THE BLOCK SIZES SPECIFIED HEREIN ARE MINIMUM SIZES, BASED ON SOIL RESISTANCE OF 2,000 POUNDS PER SQUARE FOOT. WHERE SOFTER SOILS MAY BE ENCOUNTERED, THE PROJECT DESIGN PROFESSIONAL MUST PROVIDE A DESIGN FOR REVIEW BY THE DEPARTMENT.

BRANCH OR PLUG SIZE A	B (in.)	C (in.)	D (in.)	H (in.)	REQUIRED BEARING AREA (SQ.FT.)	ESTIMATED CONCRETE REQ. CYD.
6"	46	6	20	24	7.4	0.24
8"	60	8	26	32	13.2	0.55
12"	114	12	51	38	29.7	2.45
16"	126	16	55	52	45.2	4.00
20"	140	20	60	72	70.7	6.74
24"	184	24	80	80	101.8	13.00
30"	230	30	100	100	159.0	25.61

TYPICAL BACKING BLOCKS FOR TEES AND PLUGS
2,000 POUNDS PER SQUARE FOOT SOIL RESISTANCE

WATER SERVICES
CITY OF KANSAS CITY, MISSOURI
DRAWING NO. 02669-1

DEVELOPED BY: TECHNICAL ADVISORY COMMITTEE
APPROVED BY:
DATE: 1/13/2021

1 OF 1

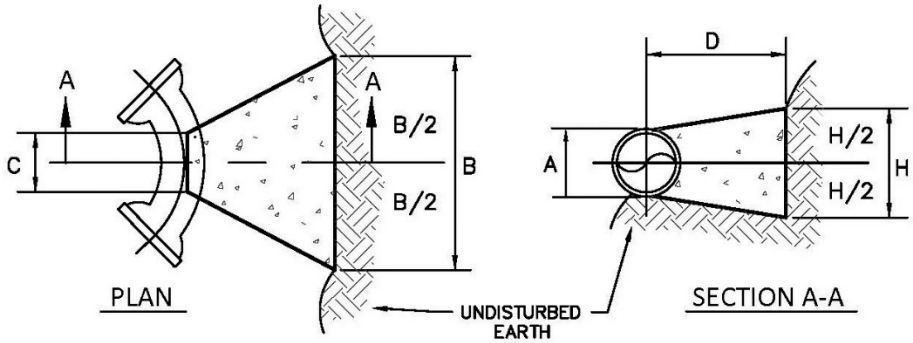

NOTES:

1. BACKING BLOCKS FOR PIPING SIZES UP THROUGH 12–INCH ARE BASED ON WORKING PRESSURE OF 175 P.S.I. PLUS 50% SURGE.
2. BACKING BLOCKS FOR PIPING SIZES 16–INCH THROUGH 24–INCH ARE BASED ON A WORKING PRESSURE OF 150 P.S.I. PLUS 50% SURGE.
3. THE PROJECT DESIGN PROFESSIONAL IS RESPONSIBLE FOR THE DESIGN OF THRUST BLOCKS. THE BLOCK SIZES SPECIFIED HEREIN ARE MINIMUM SIZES, BASED ON SOIL RESISTANCE OF 2,000 POUNDS PER SQUARE FOOT. WHERE SOFTER SOILS MAY BE ENCOUNTERED, THE PROJECT DESIGN PROFESSIONAL MUST PROVIDE A DESIGN FOR REVIEW BY THE DEPARTMENT.

11° DEGREE BENDS

PIPE SIZE A	B (in.)	C (in.)	D (in.)	H (in.)	REQUIRED BEARING AREA (SQ.FT.)	ESTIMATED CONCRETE REQ. CYD.
6"	18	6	12	12	1.5	0.03
8"	28	8	12	14	2.6	0.06
12"	38	12	13	22	5.8	0.14
16"	50	16	17	26	8.9	0.28
20"	64	20	22	32	13.9	0.58
24"	76	24	26	38	20.0	0.97
30"	95	30	33	48	31.2	1.90

22° DEGREE BENDS

PIPE SIZE A	B (in.)	C (in.)	D (in.)	H (in.)	REQUIRED BEARING AREA (SQ.FT.)	ESTIMATED CONCRETE REQ. CYD.
6"	28	6	12	16	2.9	0.06
8"	34	8	13	22	5.1	0.11
12"	56	12	22	30	11.6	0.43
16"	72	16	28	36	17.7	0.85
20"	86	20	33	46	27.6	1.54
24"	106	24	41	54	39.7	2.77
30"	136	30	53	66	62.1	5.60

45° DEGREE BENDS

PIPE SIZE A	B (in.)	C (in.)	D (in.)	H (in.)	REQUIRED BEARING AREA (SQ.FT.)	ESTIMATED CONCRETE REQ. CYD.
6"	38	6	16	22	5.7	0.15
8"	54	8	23	28	10.1	0.39
12"	82	12	35	40	22.7	1.28
16"	100	16	42	50	34.6	2.37
20"	130	20	55	60	54.1	4.83
24"	152	24	64	74	77.9	8.10
30"	196	30	83	90	121.7	16.49

90° DEGREE BENDS

PIPE SIZE A	B (in.)	C (in.)	D (in.)	H (in.)	REQUIRED BEARING AREA (SQ.FT.)	ESTIMATED CONCRETE REQ. CYD.
6"	60	6	27	26	10.5	0.46
8"	84	8	38	32	18.7	1.12
12"	126	12	57	44	42.0	3.47
16"	160	16	72	58	64.0	7.36
20"	200	20	90	72	100.0	14.27
24"	242	24	109	86	143.9	24.98
30"	324	30	147	100	224.9	52.46

TYP. BACKING BLOCKS FOR HORIZONTAL BENDS

2,000 POUNDS PER SQUARE FOOT SOIL RESISTANCE

WATER SERVICES
CITY OF KANSAS CITY, MISSOURI
DRAWING NO. 02669-2

DEVELOPED BY: _____ APPROVED BY: _____
TECHNICAL ADVISORY COMMITTEE DATE: 1/13/2021

1 OF 1

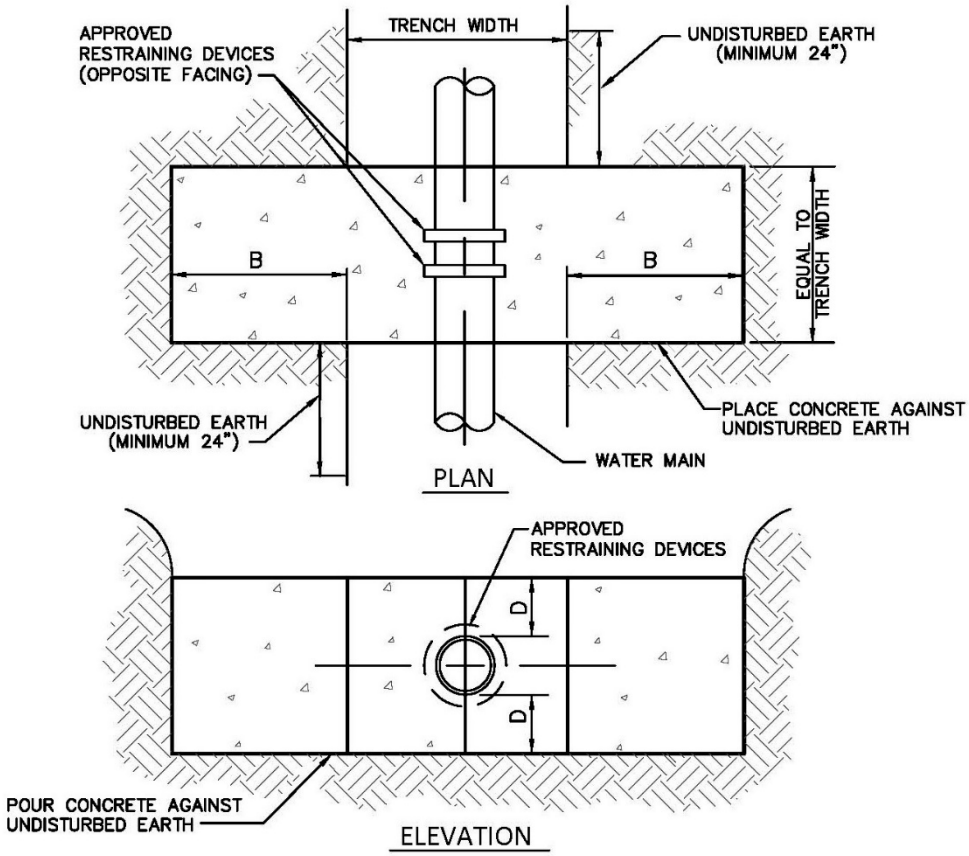

NOTES:

1. STRADDLE BLOCKS ARE SIZED FOR 175 P.S.I. LINE PRESSURE 50% SURGE.
2. THE PROJECT DESIGN PROFESSIONAL IS RESPONSIBLE FOR DESIGN OF STRADDLE BLOCKS. THE SIZES SPECIFIED HEREIN ARE MINIMUM SIZES BASED ON SOIL RESISTANCE OF 2,000 POUNDS PER SQUARE FOOT. WHERE SOFTER SOILS MAY BE ENCOUNTERED, THE PROJECT DESIGN PROFESSIONAL MUST PROVIDE A DESIGN FOR REVIEW BY THE DEPARTMENT.

PIPE SIZE	TRENCH WIDTH (in.)	B (in.)	D (in.)	REQUIRED BEARING AREA (SQ. FT.)	ESTIMATED CONCRETE REQ. CYD.
6"	30	24	9	7.4	0.9
8"	32	30	12	13.2	1.5

TYPICAL STRADDLE BLOCK FOR 6 AND 8 INCH PIPE
2,000 POUNDS PER SQUARE FOOT SOIL RESISTANCE

WATER SERVICES
CITY OF KANSAS CITY, MISSOURI
DRAWING NO. 02669-3

DEVELOPED BY: TECHNICAL ADVISORY COMMITTEE
APPROVED BY:
DATE: 1/14/2021

1 OF 1

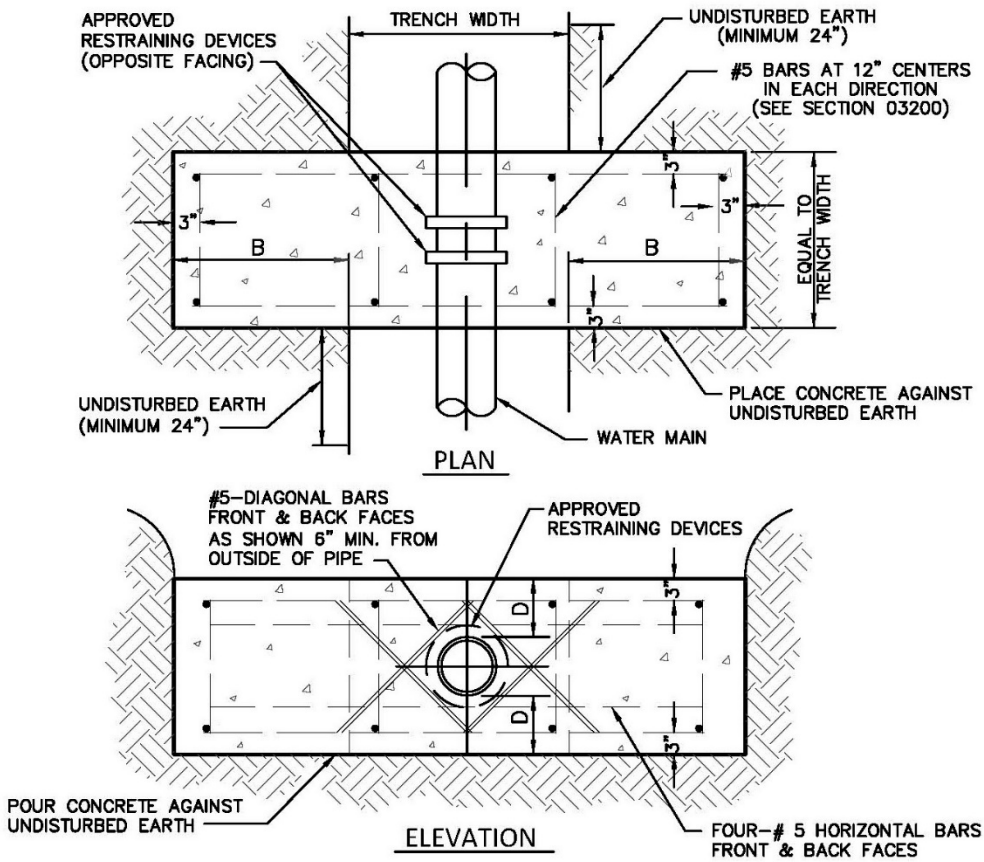

NOTES:

1. STRADDLE BLOCKS 12" ARE SIZED FOR 175 P.S.I. , AND 16" & LARGER ARE SIZED FOR 150 P.S.I. LINE PRESSURE 50% SURGE.
2. THE PROJECT DESIGN PROFESSIONAL IS RESPONSIBLE FOR DESIGN OF STRADDLE BLOCKS. THE SIZES SPECIFIED HEREIN ARE MINIMUM SIZES BASED ON SOIL RESISTANCE OF 2,000 POUNDS PER SQUARE FOOT. WHERE SOFTER SOILS MAY BE ENCOUNTERED, THE PROJECT DESIGN PROFESSIONAL MUST PROVIDE A DESIGN FOR REVIEW BY THE DEPARTMENT.

PIPE SIZE	TRENCH WIDTH (in.)	B (in.)	D (in.)	REQUIRED BEARING AREA (SQ. FT.)	ESTIMATED CONCRETE REQ. CYD.
12"	34	51	15	29.7	4.1
16"	40	48	26	45.2	7.8

TYPICAL STRADDLE BLOCK FOR 12 & 16 INCH PIPE
2,000 POUNDS PER SQUARE FOOT SOIL RESISTANCE

WATER SERVICES
CITY OF KANSAS CITY, MISSOURI
DRAWING NO. 02669-4

DEVELOPED BY: TECHNICAL ADVISORY COMMITTEE
APPROVED BY:
DATE: 1/14/2021

1 OF 1

DETAIL 02669-5

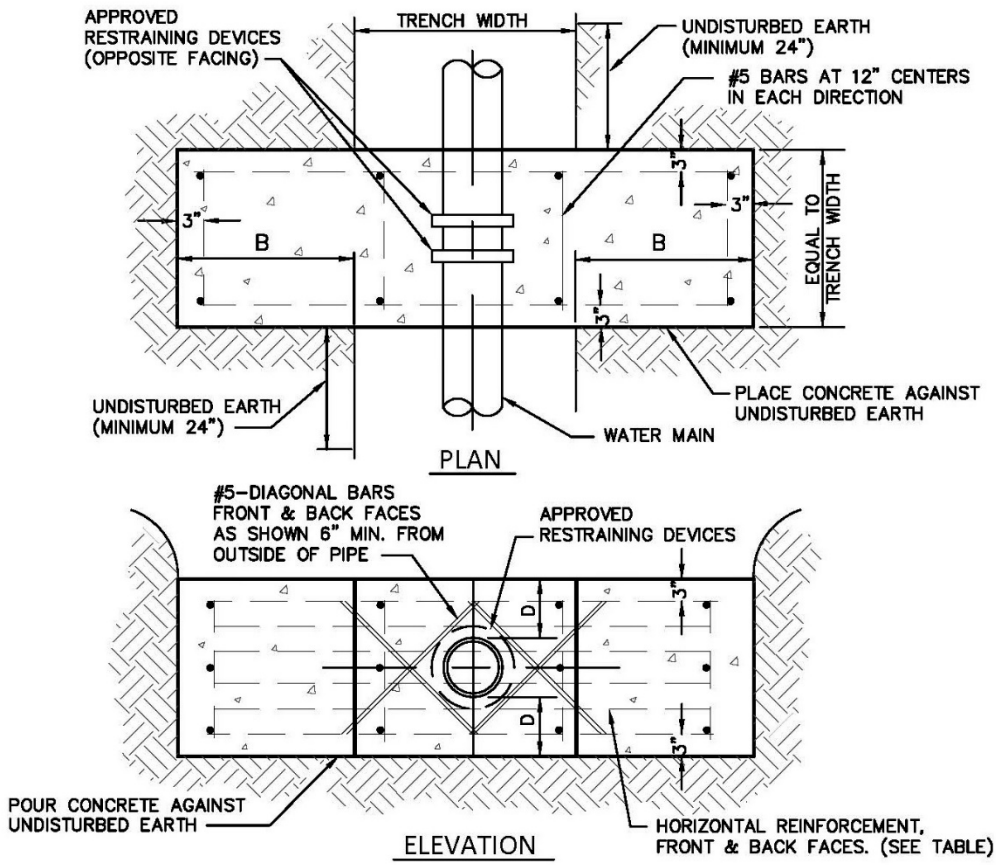

NOTES:

1. STRADDLE BLOCKS ARE SIZED FOR 150 P.S.I. LINE PRESSURE 50% SURGE.
2. THE PROJECT DESIGN PROFESSIONAL IS RESPONSIBLE FOR DESIGN OF STRADDLE BLOCKS. THE SIZES SPECIFIED HEREIN ARE MINIMUM SIZES BASED ON SOIL RESISTANCE OF 2,000 POUNDS PER SQUARE FOOT. WHERE SOFTER SOILS MAY BE ENCOUNTERED, THE PROJECT DESIGN PROFESSIONAL MUST PROVIDE A DESIGN FOR REVIEW BY THE DEPARTMENT.

PIPE SIZE	BAR SIZE	NO. OF BARS (each face)	TRENCH WIDTH (in.)	B (in.)	D (in.)	REQUIRED BEARING AREA (SQ. FT.)	ESTIMATED CONCRETE REQ. CYD.
20"	#5	5	44	71	26	70.7	12.3
24"	#6	6	48	92	28	101.8	18.6
30"	#7	6	60	115	35	159.0	36.4

TYP. STRADDLE BLOCK FOR 20, 24, & 30 INCH PIPE
2,000 POUNDS PER SQUARE FOOT SOIL RESISTANCE

WATER SERVICES
CITY OF KANSAS CITY, MISSOURI
DRAWING NO. 02669-5

DEVELOPED BY: TECHNICAL ADVISORY COMMITTEE
APPROVED BY:
DATE: 1/14/2021

1 OF 1

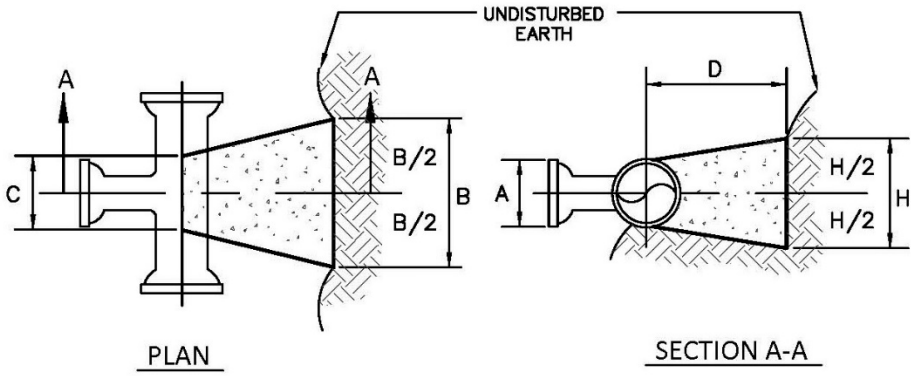

NOTES:

1. BACKING BLOCKS FOR PIPING SIZES UP THROUGH 12–INCH ARE BASED ON WORKING PRESSURE OF 175 P.S.I. PLUS 50% SURGE.
2. BACKING BLOCKS FOR PIPING SIZES 16–INCH THROUGH 24–INCH ARE BASED ON A WORKING PRESSURE OF 150 P.S.I. PLUS 50% SURGE.
3. THE PROJECT DESIGN PROFESSIONAL IS RESPONSIBLE FOR THE DESIGN OF THRUST BLOCKS. THE BLOCK SIZES SPECIFIED HEREIN ARE MINIMUM SIZES, BASED ON SOIL RESISTANCE OF 2,500 POUNDS PER SQUARE FOOT. WHERE SOFTER SOILS MAY BE ENCOUNTERED, THE PROJECT DESIGN PROFESSIONAL MUST PROVIDE A DESIGN FOR REVIEW BY THE DEPARTMENT.

BRANCH OR PLUG SIZE A	B (in.)	C (in.)	D (in.)	H (in.)	REQUIRED BEARING AREA (SQ.FT.)	ESTIMATED CONCRETE REQ. CYD.
6"	48	6	21	18	5.9	0.20
8"	60	8	26	26	10.6	0.45
12"	96	12	42	36	23.8	1.62
16"	110	16	47	48	36.2	2.79
20"	140	20	60	60	56.5	5.76
24"	180	24	78	66	81.4	10.41
30"	220	30	95	84	127.2	19.73

ALT. BACKING BLOCKS FOR TEES AND PLUGS
2,500 POUNDS PER SQUARE FOOT SOIL RESISTANCE

WATER SERVICES
CITY OF KANSAS CITY, MISSOURI
DRAWING NO. 02669-6

DEVELOPED BY: TECHNICAL ADVISORY COMMITTEE
APPROVED BY:
DATE: 1/13/2021

1 OF 1

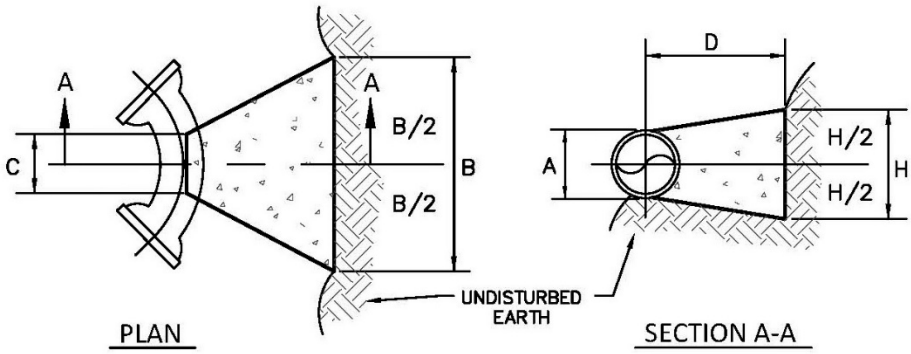

NOTES:

1. BACKING BLOCKS FOR PIPING SIZES UP THROUGH 12–INCH ARE BASED ON WORKING PRESSURE OF 175 P.S.I. PLUS 50% SURGE.
2. BACKING BLOCKS FOR PIPING SIZES 16–INCH THROUGH 24–INCH ARE BASED ON A WORKING PRESSURE OF 150 P.S.I. PLUS 50% SURGE.
3. THE PROJECT DESIGN PROFESSIONAL IS RESPONSIBLE FOR THE DESIGN OF THRUST BLOCKS. THE BLOCK SIZES SPECIFIED HEREIN ARE MINIMUM SIZES, BASED ON SOIL RESISTANCE OF 2,500 POUNDS PER SQUARE FOOT. WHERE SOFTER SOILS MAY BE ENCOUNTERED, THE PROJECT DESIGN PROFESSIONAL MUST PROVIDE A DESIGN FOR REVIEW BY THE DEPARTMENT.

11° DEGREE BENDS

PIPE SIZE A	B (in.)	C (in.)	D (in.)	H (in.)	REQUIRED BEARING AREA (SQ.FT.)	ESTIMATED CONCRETE REQ. CYD.
6"	18	6	12	12	1.5	0.032
8"	28	8	12	14	2.6	0.059
12"	36	12	12	20	5.8	0.100
16"	40	16	12	26	8.9	0.167
20"	56	20	18	30	13.9	0.401
24"	64	24	20	36	20.0	0.617
30"	90	30	30	40	31.2	1.447

22° DEGREE BENDS

PIPE SIZE A	B (in.)	C (in.)	D (in.)	H (in.)	REQUIRED BEARING AREA (SQ.FT.)	ESTIMATED CONCRETE REQ. CYD.
6"	24	6	12	16	2.3	0.050
8"	28	8	12	20	4.1	0.091
12"	46	12	19	28	9.3	0.341
16"	78	16	24	32	14.1	0.593
20"	86	20	35	36	22.1	1.365
24"	96	24	36	48	31.8	2.000
30"	142	30	52	54	49.6	4.534

45° DEGREE BENDS

PIPE SIZE A	B (in.)	C (in.)	D (in.)	H (in.)	REQUIRED BEARING AREA (SQ.FT.)	ESTIMATED CONCRETE REQ. CYD.
6"	34	6	14	20	4.5	0.11
8"	46	8	19	26	8.1	0.26
12"	80	12	34	34	18.2	1.00
16"	100	16	42	40	27.7	1.90
20"	116	20	48	54	43.3	3.40
24"	150	24	63	60	62.3	6.50
30"	168	30	69	84	97.4	11.10

90° DEGREE BENDS

PIPE SIZE A	B (in.)	C (in.)	D (in.)	H (in.)	REQUIRED BEARING AREA (SQ.FT.)	ESTIMATED CONCRETE REQ. CYD.
6"	52	6	23	24	8.4	0.32
8"	78	8	35	28	14.9	0.84
12"	122	12	55	40	33.6	3.00
16"	144	16	64	52	51.2	5.30
20"	180	20	80	64	80.0	10.20
24"	208	24	92	80	115.2	17.00
30"	288	30	129	90	179.9	37.10

ALT. BACKING BLOCKS FOR HORIZONTAL BENDS
2,500 POUNDS PER SQUARE FOOT SOIL RESISTANCE

WATER SERVICES
CITY OF KANSAS CITY, MISSOURI
DRAWING NO. 02669-7

DEVELOPED BY: TECHNICAL ADVISORY COMMITTEE
APPROVED BY:
DATE: 1/13/2021

1 OF 1

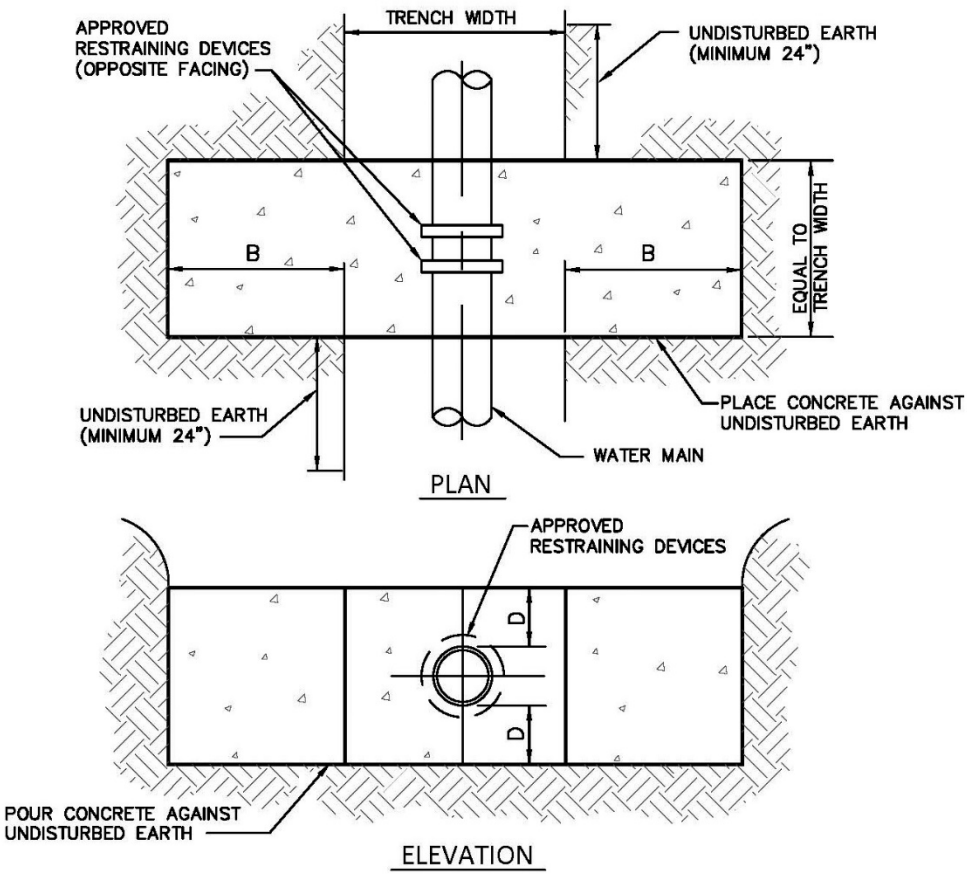

NOTES:

1. STRADDLE BLOCKS ARE SIZED FOR 175 P.S.I. LINE PRESSURE 50% SURGE.
2. THE PROJECT DESIGN PROFESSIONAL IS RESPONSIBLE FOR DESIGN OF STRADDLE BLOCKS. THE SIZES SPECIFIED HEREIN ARE MINIMUM SIZES BASED ON SOIL RESISTANCE OF 2,500 POUNDS PER SQUARE FOOT. WHERE SOFTER SOILS MAY BE ENCOUNTERED, THE PROJECT DESIGN PROFESSIONAL MUST PROVIDE A DESIGN FOR REVIEW BY THE DEPARTMENT.

PIPE SIZE	TRENCH WIDTH (in.)	B (in.)	D (in.)	REQUIRED BEARING AREA (SQ. FT.)	ESTIMATED CONCRETE REQ. CYD.
6"	30	24	6	5.9	0.71
8"	32	32	8	10.6	1.16

THIS DETAIL TO BE USED ONLY IF SPECIFIED BY PROJECT DESIGN PROFESSIONAL ON APPROVED FOR CONSTRUCTION DRAWINGS.

ALT. STRADDLE BLOCK FOR 12 & 16 INCH PIPE

2,500 POUNDS PER SQUARE FOOT SOIL RESISTANCE

WATER SERVICES
CITY OF KANSAS CITY, MISSOURI
DRAWING NO. 02669-8

DEVELOPED BY: TECHNICAL ADVISORY COMMITTEE
APPROVED BY:
DATE: 1/14/2021

1 OF 1

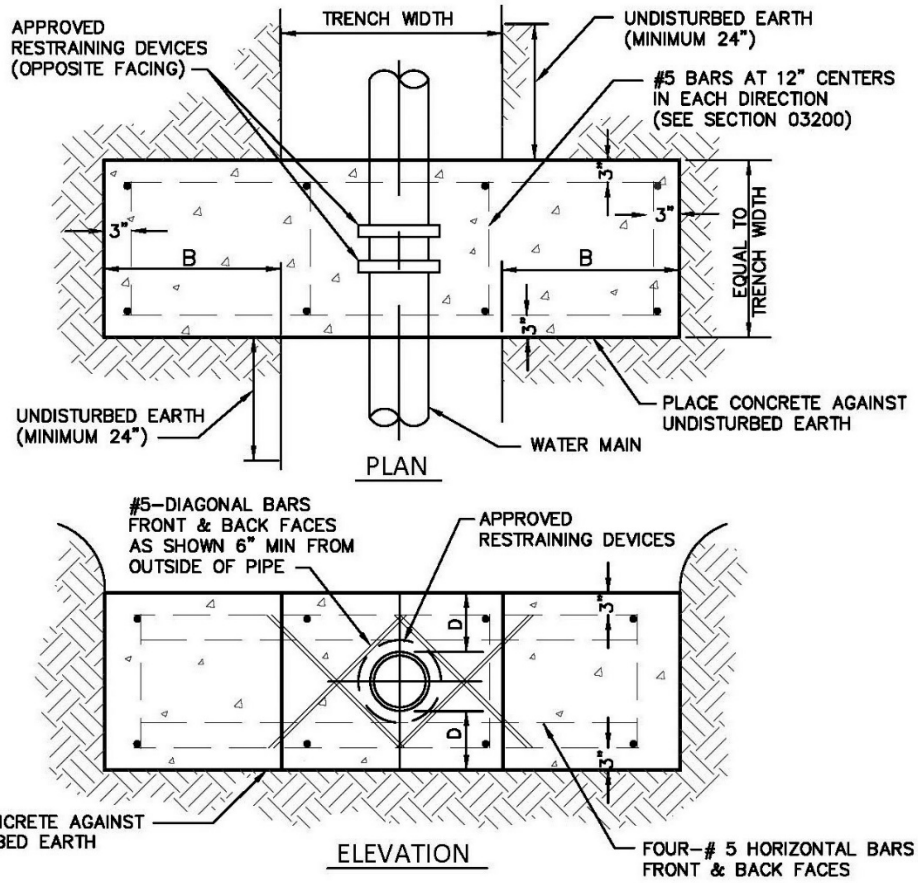

NOTES:

1. STRADDLE BLOCKS 12" ARE SIZED FOR 175 P.S.I. , AND 16" & LARGER ARE SIZED FOR 150 P.S.I. LINE PRESSURE 50% SURGE.
2. THE PROJECT DESIGN PROFESSIONAL IS RESPONSIBLE FOR DESIGN OF STRADDLE BLOCKS.
3. THE SIZES SPECIFIED HEREIN ARE MINIMUM SIZES BASED ON SOIL RESISTANCE OF 2,500 POUNDS PER SQUARE FOOT. WHERE SOFTER SOILS MAY BE ENCOUNTERED, THE PROJECT DESIGN PROFESSIONAL MUST PROVIDE A DESIGN FOR REVIEW BY THE DEPARTMENT.

PIPE SIZE	TRENCH WIDTH (in.)	B (in.)	D (in.)	REQUIRED BEARING AREA (SQ. FT.)	ESTIMATED CONCRETE REQ. CYD.
12"	34	38	17	23.8	3.60
16"	40	45	22	36.2	6.51

THIS DETAIL TO BE USED ONLY IF SPECIFIED BY PROJECT DESIGN PROFESSIONAL ON APPROVED FOR CONSTRUCTION DRAWINGS.

ALT. STRADDLE BLOCK FOR 12 & 16 INCH PIPE

2,500 POUNDS PER SQUARE FOOT SOIL RESISTANCE

WATER SERVICES
CITY OF KANSAS CITY, MISSOURI
DRAWING NO. 02669-9

DEVELOPED BY: TECHNICAL ADVISORY COMMITTEE
APPROVED BY:
DATE: 1/14/2021

1 OF 1

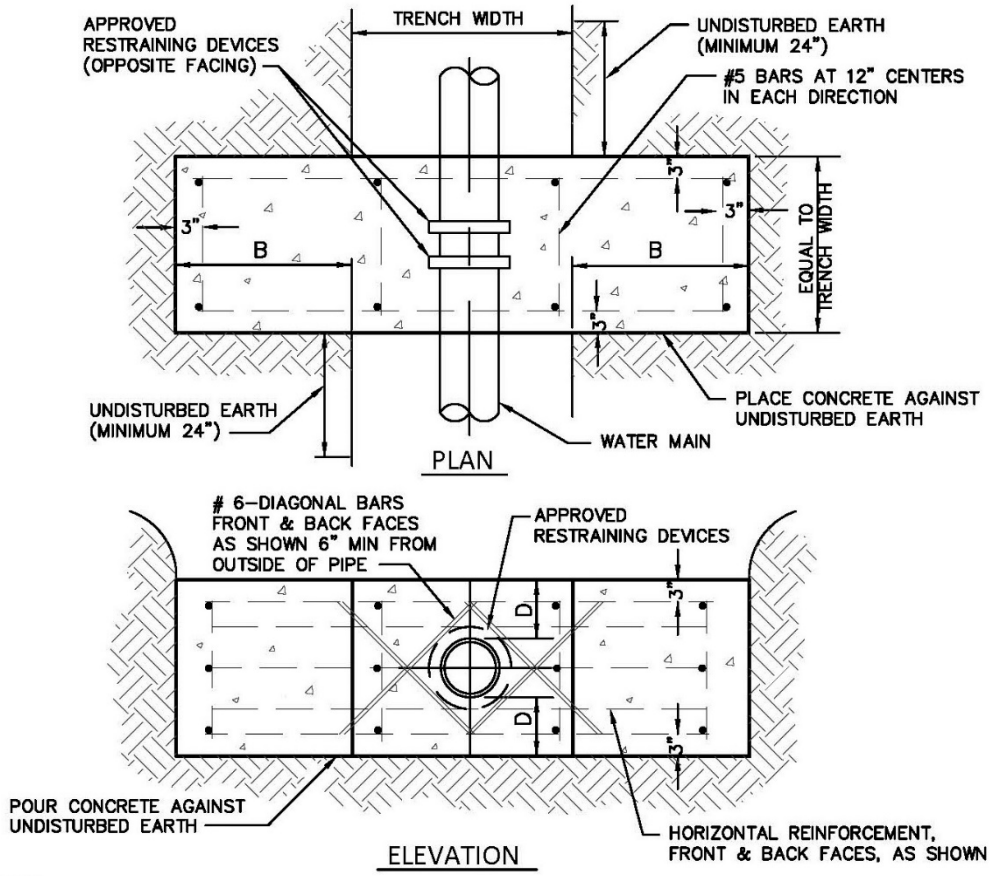

NOTES:

1. STRADDLE BLOCKS ARE SIZED FOR 150 P.S.I. LINE PRESSURE 50% SURGE.
2. THE PROJECT DESIGN PROFESSIONAL IS RESPONSIBLE FOR DESIGN OF STRADDLE BLOCKS. THE SIZES SPECIFIED HEREIN ARE MINIMUM SIZES BASED ON SOIL RESISTANCE OF 2,500 POUNDS PER SQUARE FOOT. WHERE SOFTER SOILS MAY BE ENCOUNTERED, THE PROJECT DESIGN PROFESSIONAL MUST PROVIDE A DESIGN FOR REVIEW BY THE DEPARTMENT.

PIPE SIZE	BAR SIZE	NO. OF BARS	TRENCH WIDTH (in.)	B (in.)	D (in.)	REQUIRED BEARING AREA (SQ. FT.)	ESTIMATED CONCRETE REQ. CYD.
20"	#5	5	44	60	24	56.5	10.2
24"	#6	5	48	78	26	81.4	15.5
30"	#7	5	60	96	33	127.2	30.2

THIS DETAIL TO BE USED ONLY IF SPECIFIED BY PROJECT DESIGN PROFESSIONAL ON APPROVED FOR CONSTRUCTION DRAWINGS.

ALT. STRADDLE BLOCK FOR 20, 24, & 30 INCH PIPE
2,500 POUNDS PER SQUARE FOOT SOIL RESISTANCE

WATER SERVICES
CITY OF KANSAS CITY, MISSOURI
DRAWING NO. 02669-10

DEVELOPED BY: TECHNICAL ADVISORY COMMITTEE
APPROVED BY:
DATE: 1/14/2021

1 OF 1

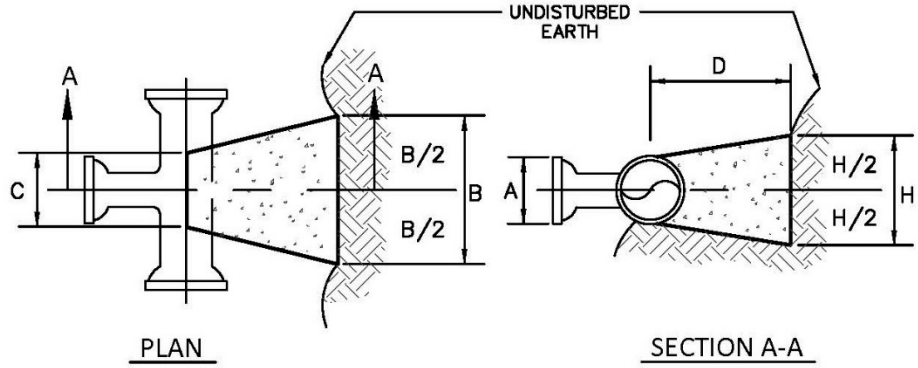

NOTES:

1. BACKING BLOCKS FOR PIPING SIZES UP THROUGH 12–INCH ARE BASED ON WORKING PRESSURE OF 175 P.S.I. PLUS 50% SURGE.
2. BACKING BLOCKS FOR PIPING SIZES 16–INCH THROUGH 24–INCH ARE BASED ON A WORKING PRESSURE OF 150 P.S.I. PLUS 50% SURGE.
3. THE PROJECT DESIGN PROFESSIONAL IS RESPONSIBLE FOR THE DESIGN OF THRUST BLOCKS. THE BLOCK SIZES SPECIFIED HEREIN ARE MINIMUM SIZES, BASED ON SOIL RESISTANCE OF 3,000 POUNDS PER SQUARE FOOT. WHERE SOFTER SOILS MAY BE ENCOUNTERED, THE PROJECT DESIGN PROFESSIONAL MUST PROVIDE A DESIGN FOR REVIEW BY THE DEPARTMENT.

BRANCH OR PLUG SIZE A	B (in.)	C (in.)	D (in.)	H (in.)	REQUIRED BEARING AREA (SQ.FT.)	ESTIMATED CONCRETE REQ. CYD.
6"	40	6	17	18	4.9	0.14
8"	54	8	23	24	8.8	0.34
12"	72	12	30	40	19.8	0.97
16"	88	16	36	50	30.2	1.80
20"	114	20	47	60	47.1	3.65
24"	136	24	56	72	67.9	6.22
30"	154	30	62	100	106.0	10.83

THIS DETAIL TO BE USED ONLY IF SPECIFIED BY PROJECT DESIGN PROFESSIONAL ON APPROVED FOR CONSTRUCTION DRAWINGS.

ALT. BACKING BLOCKS FOR TEES AND PLUGS
3,000 POUNDS PER SQUARE FOOT SOIL RESISTANCE

WATER SERVICES
CITY OF KANSAS CITY, MISSOURI
DRAWING NO. 02669-11

DEVELOPED BY: TECHNICAL ADVISORY COMMITTEE
APPROVED BY:
DATE: 1/13/2021

1 OF 1

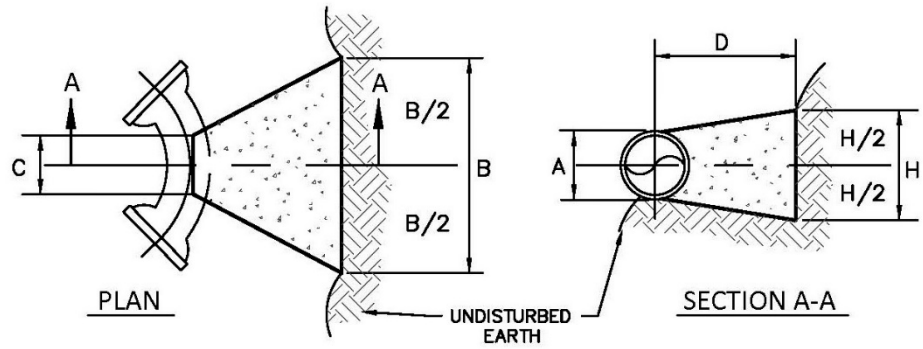

NOTES:

1. BACKING BLOCKS FOR PIPING SIZES UP THROUGH 12–INCH ARE BASED ON WORKING PRESSURE OF 175 P.S.I. PLUS 50% SURGE.
2. BACKING BLOCKS FOR PIPING SIZES 16–INCH THROUGH 24–INCH ARE BASED ON A WORKING PRESSURE OF 150 P.S.I. PLUS 50% SURGE.
3. THE PROJECT DESIGN PROFESSIONAL IS RESPONSIBLE FOR THE DESIGN OF THRUST BLOCKS. THE BLOCK SIZES SPECIFIED HEREIN ARE MINIMUM SIZES, BASED ON SOIL RESISTANCE OF 3,000 POUNDS PER SQUARE FOOT. WHERE SOFTER SOILS MAY BE ENCOUNTERED, THE PROJECT DESIGN PROFESSIONAL MUST PROVIDE A DESIGN FOR REVIEW BY THE DEPARTMENT.

11° DEGREE BENDS

PIPE SIZE A	B (in.)	C (in.)	D (in.)	H (in.)	REQUIRED BEARING AREA (SQ.FT.)	ESTIMATED CONCRETE REQ. CYD.
6"	18	6	12	12	1.0	0.032
8"	20	8	12	14	1.7	0.044
12"	32	12	12	20	3.9	0.101
16"	36	16	12	24	5.9	0.144
20"	40	20	12	34	9.2	0.226
24"	52	24	14	38	13.3	0.380
30"	76	30	23	40	20.8	0.971

22° DEGREE BENDS

PIPE SIZE A	B (in.)	C (in.)	D (in.)	H (in.)	REQUIRED BEARING AREA (SQ.FT.)	ESTIMATED CONCRETE REQ. CYD.
6"	24	6	12	14	1.9	0.048
8"	28	8	12	18	3.4	0.073
12"	46	12	17	24	7.7	0.227
16"	62	16	23	28	11.8	0.491
20"	78	20	29	34	18.4	0.949
24"	96	24	36	40	26.5	1.704
30"	142	30	56	42	41.4	4.100

45° DEGREE BENDS

PIPE SIZE A	B (in.)	C (in.)	D (in.)	H (in.)	REQUIRED BEARING AREA (SQ.FT.)	ESTIMATED CONCRETE REQ. CYD.
6"	30	6	12	18	3.8	0.074
8"	40	8	16	24	6.7	0.176
12"	74	12	31	30	15.1	0.785
16"	94	16	39	36	23.1	1.521
20"	120	20	50	44	36.1	3.044
24"	140	24	58	54	51.9	5.057
30"	164	30	67	72	81.2	9.125

90° DEGREE BENDS

PIPE SIZE A	B (in.)	C (in.)	D (in.)	H (in.)	REQUIRED BEARING AREA (SQ.FT.)	ESTIMATED CONCRETE REQ. CYD.
6"	52	6	23	20	7.0	0.265
8"	72	8	32	26	12.4	0.664
12"	112	12	50	36	28.0	2.238
16"	128	16	56	48	42.7	3.841
20"	166	20	73	58	66.6	7.845
24"	188	24	82	74	96.0	12.732
30"	270	30	120	80	149.9	28.935

THIS DETAIL TO BE USED ONLY IF SPECIFIED BY PROJECT DESIGN PROFESSIONAL ON APPROVED FOR CONSTRUCTION DRAWINGS.

ALT. BACKING BLOCKS FOR HORIZONTAL BENDS
3,000 POUNDS PER SQUARE FOOT SOIL RESISTANCE

WATER SERVICES
CITY OF KANSAS CITY, MISSOURI
DRAWING NO. 02669-12

DEVELOPED BY: TECHNICAL ADVISORY COMMITTEE
APPROVED BY:
DATE: 1/13/2021

1 OF 1

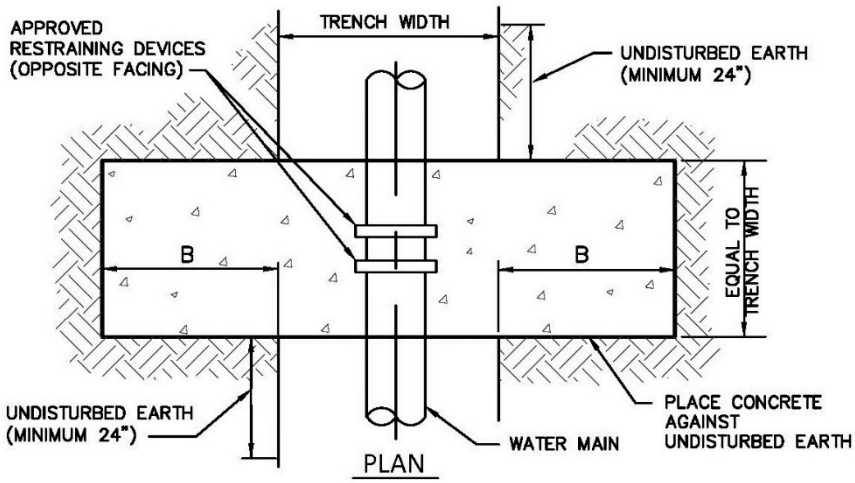

PLAN

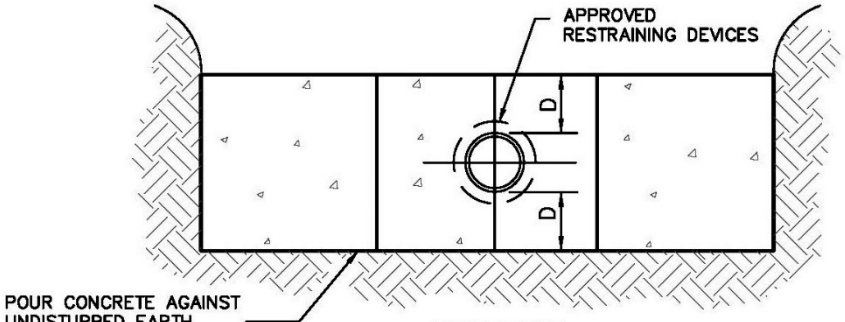

ELEVATION

NOTES:

1. STRADDLE BLOCKS ARE SIZED FOR 175 P.S.I. LINE PRESSURE 50% SURGE.
2. THE PROJECT DESIGN PROFESSIONAL IS RESPONSIBLE FOR DESIGN OF STRADDLE BLOCKS. THE SIZES SPECIFIED HEREIN ARE MINIMUM SIZES BASED ON SOIL RESISTANCE OF 3,000 POUNDS PER SQUARE FOOT. WHERE SOFTER SOILS MAY BE ENCOUNTERED, THE PROJECT DESIGN PROFESSIONAL MUST PROVIDE A DESIGN FOR REVIEW BY THE DEPARTMENT.

PIPE SIZE	TRENCH WIDTH (in.)	B (in.)	D (in.)	REQUIRED BEARING AREA (SQ. FT.)	ESTIMATED CONCRETE REQ. CYD.
6"	30	24	5	4.9	0.62
8"	32	29	7	8.8	1.00

THIS DETAIL TO BE USED ONLY IF SPECIFIED BY PROJECT DESIGN PROFESSIONAL ON APPROVED FOR CONSTRUCTION DRAWINGS.

ALT. STRADDLE BLOCK FOR 6 AND 8 INCH PIPE

3,000 POUNDS PER SQUARE FOOT SOIL RESISTANCE

WATER SERVICES
CITY OF KANSAS CITY, MISSOURI

DRAWING NO. 02669-13

DEVELOPED BY: TECHNICAL ADVISORY COMMITTEE

APPROVED BY:

DATE: 1/14/2021

1 OF 1

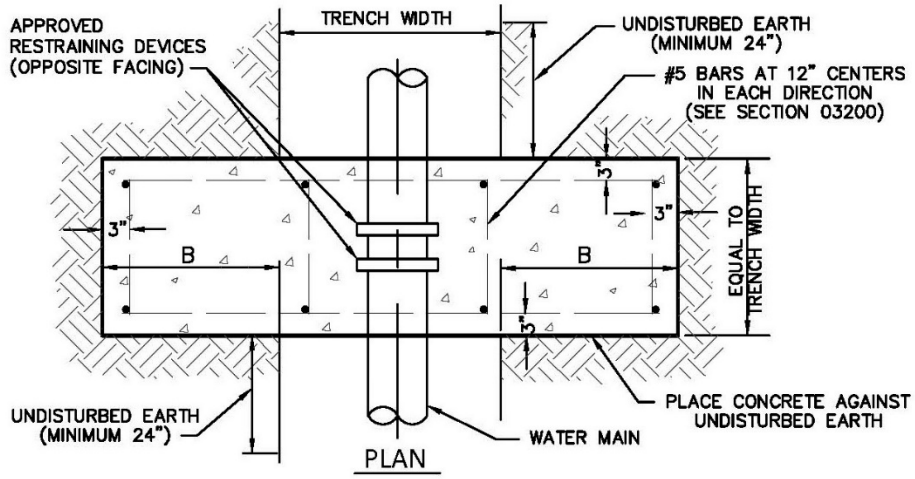

PLAN

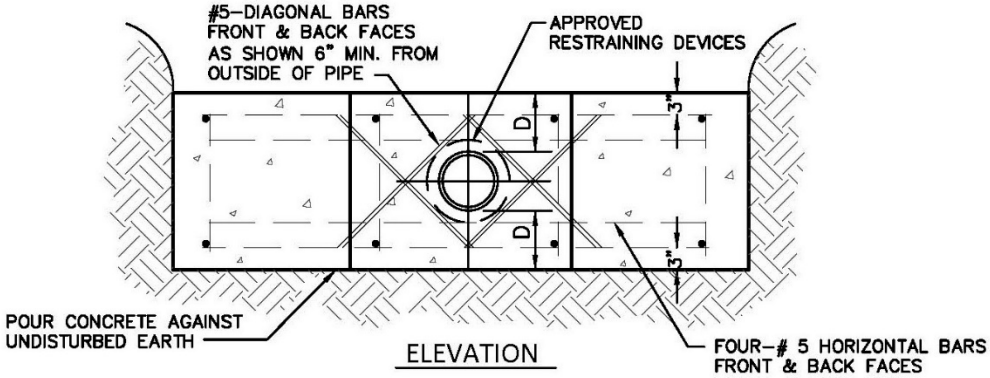

ELEVATION

NOTES:

1. STRADDLE BLOCKS 12" ARE SIZED FOR 175 P.S.I. , AND 16" & LARGER ARE SIZED FOR 150 P.S.I. LINE PRESSURE 50% SURGE.
2. THE PROJECT DESIGN PROFESSIONAL IS RESPONSIBLE FOR DESIGN OF STRADDLE BLOCKS. THE SIZES SPECIFIED HEREIN ARE MINIMUM SIZES BASED ON SOIL RESISTANCE OF 3,000 POUNDS PER SQUARE FOOT. WHERE SOFTER SOILS MAY BE ENCOUNTERED, THE PROJECT DESIGN PROFESSIONAL MUST PROVIDE A DESIGN FOR REVIEW BY THE DEPARTMENT.

PIPE SIZE	TRENCH WIDTH (in.)	B (in.)	D (in.)	REQUIRED BEARING AREA (SQ. FT.)	ESTIMATED CONCRETE REQ. CYD.
12"	34	34	15	19.8	3.0
16"	40	42	18	30.2	5.4

THIS DETAIL TO BE USED ONLY IF SPECIFIED BY PROJECT DESIGN PROFESSIONAL ON APPROVED FOR CONSTRUCTION DRAWINGS.

ALT. STRADDLE BLOCK FOR 12 & 16 INCH PIPE

3,000 POUNDS PER SQUARE FOOT SOIL RESISTANCE

WATER SERVICES
CITY OF KANSAS CITY, MISSOURI
DRAWING NO. 02669-14

DEVELOPED BY: TECHNICAL ADVISORY COMMITTEE
APPROVED BY:
DATE: 1/14/2021

1 OF 1

DETAIL 02669-15

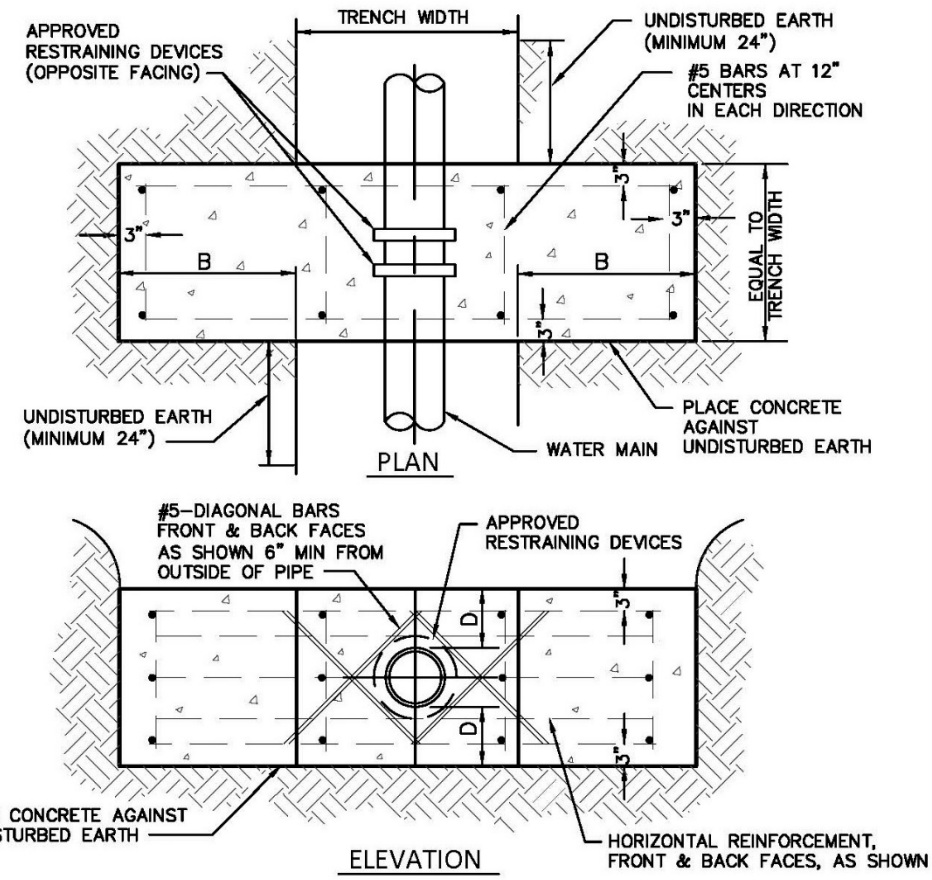

NOTES:

1. STRADDLE BLOCKS ARE SIZED FOR 150 P.S.I. LINE PRESSURE 50% SURGE.
2. THE PROJECT DESIGN PROFESSIONAL IS RESPONSIBLE FOR DESIGN OF STRADDLE BLOCKS. THE SIZES SPECIFIED HEREIN ARE MINIMUM SIZES BASED ON SOIL RESISTANCE OF 3,000 POUNDS PER SQUARE FOOT. WHERE SOFTER SOILS MAY BE ENCOUNTERED, THE PROJECT DESIGN PROFESSIONAL MUST PROVIDE A DESIGN FOR REVIEW BY THE DEPARTMENT.

PIPE SIZE	BAR SIZE	NO. OF BARS	TRENCH WIDTH (in.)	B (in.)	D (in.)	REQUIRED BEARING AREA (SQ. FT.)	ESTIMATED CONCRETE REQ. CYD.
20"	#5	5	44	57	20	47.1	8.6
24"	#6	5	48	68	24	68.0	13.2
30"	#7	5	60	85	30	106.3	25.7

THIS DETAIL TO BE USED ONLY IF SPECIFIED BY PROJECT DESIGN PROFESSIONAL ON APPROVED FOR CONSTRUCTION DRAWINGS.

ALT. STRADDLE BLOCK FOR 20, 24, & 30 INCH PIPE
3,000 POUNDS PER SQUARE FOOT SOIL RESISTANCE

WATER SERVICES
CITY OF KANSAS CITY, MISSOURI
DRAWING NO. 02669-15

DEVELOPED BY: TECHNICAL ADVISORY COMMITTEE
APPROVED BY:
DATE: 1/14/2021

1 OF 1

END OF SECTION

SECTION 02675 – FLUSHING, TESTING AND DISINFECTION OF WATER MAINS

PART 1 - GENERAL

1.01 SUMMARY

A. This section provides the required procedure for water main flushing, testing, disinfection, and de-chlorination of water mains prior to placing the main in service.
B. This section includes Corporation Cocks, Hydrostatic Testing, and Disinfection of Water mains.

1.02 SPECIFICATION MODIFICATIONS

A. It is understood that throughout this section these Specifications may be modified by appropriate items in Section 01015 – Specific Project Requirements, or as otherwise indicated on the Contract Drawings.

1.03 RELATED SECTIONS

A. Section 01000 – General Project Requirements.
B. Section 01015 – Specific Project Requirements.
C. Section 02645 – Hydrants and Flushing Assemblies.
D. Section 02669 – Thrust Restraints.

1.04 CODES AND STANDARDS

A. The publications listed below form a part of this specification to the extent referenced. The publications are referred to within the text by the basic designation only.
B. American Water Works Association (AWWA):
   AWWA C651 Standards for Disinfecting Water Mains.

1.05 PROVIDED BY CITY

A. The City will perform bacteriological testing in accordance with paragraph BACTERIOLOGICAL TESTING.
B. The City will provide Contractor with all sampling bottles for bacteriological testing.
C. The City shall provide water for filling, flushing and testing water mains in accordance with Section 01000 – General Project Requirements.

1.06 SUBMITTALS

A. Submit as specified in Section 01300 – Submittals.
B. Other Submittals:
   1. Disinfection Report.
   2. Certification of Cleanliness.
   3. Product data for sodium hypochlorite or calcium hypochlorite.
   4. Product data for meters.
   5. Product data for backflow preventers.

1.07 QUALITY ASSURANCE

A. The Contractor is responsible for the quality assurance and quality control of the Work.
B. Work shall be performed in accordance with AWWA C651.
C. Disinfection Plan:

1. Prior to the Preconstruction Conference, the Contractor shall submit for review and approval a Disinfection Plan which includes, but is not limited to, the following information:
   (a) Information as required in Section 01015 – Specific Project Requirements.
   (b) Type and form of disinfection to be used (sodium hypochlorite or calcium hypochlorite).
   (c) Location of injection points.
   (d) Location of sample points / corporation cocks. The maximum spacing of sample points shall be 1,200 feet or as directed by the City.
   (e) Order of sampling.
   (f) Location of required valve operations.
   (g) Location of flushing points.
   (h) Locations for disposal water.
   (i) Product data pertaining to neutralizing chemicals.
   (j) Procedures for final connection to existing mains.
2. Locations of key features associated with the plan shall be provided on a marked-up set of Contract Drawings.
3. Any modifications to the Disinfection Plan shall be resubmitted to the City for review and approval.

D. Disinfection Report: Immediately following the completion of the disinfection procedures, Contractor shall prepare a Disinfection Report which shall include the following information:
1. Type and form of disinfectant used.
2. Date and time of disinfectant injection start and time of completion.
3. Test locations.
4. Initial and 24-hour disinfectant residuals (quantity in treated water) in parts per million for each outlet tested.
5. Date and time of post disinfectant flushing start and completion.
6. Disinfectant residual after flushing in parts per million for each outlet tested.

E. Certification of Cleanliness: The Contractor shall certify in writing that the cleanliness of the installed water distribution system meets or exceeds specified requirements.

1.08 PRODUCT DELIVERY, STORAGE AND HANDLING

A. See Section 01000 – General Project Requirements, paragraph PRODUCT DELIVERY, STORAGE AND HANDLING.

PART 2 - PRODUCTS

2.01 CORPORATION COCKS

A. The Contractor, when needed, shall furnish and install a ¾-inch corporation cock to be used in the testing and disinfection of each new main. The location of these corporation cocks shall be as directed by the City.

B. After the line has been tested and prior to placing the main in service, the Contractor shall remove the corporation cock and replace it with a tapered brass plug.

2.02 SODIUM HYPOCHLORITE

A. Sodium hypochlorite shall conform to AWWA B300

2.03 CALCIUM HYPOCHLORITE

A. Calcium hypochlorite shall conform to AWWA B300

2.04 WATER

A. See Section 01000 – General Project Requirements, paragraph WATER.

PART 3 - EXECUTION

3.01 OPERATIONS OF EXISTING VALVES

A. See Section 01000 – General Project Requirements, paragraph OPERATION OF EXISTING VALVES.

3.02 TEMPORARY CONNECTIONS

A. The Contractor shall furnish and install all temporary flushing assemblies, fittings, thrust blocking, and restraining devices required for temporary connections for the filling, flushing, pressure testing, chlorination, de-chlorination and final flushing of the new water mains.

B. See also the following sections:
   1. See Section 02645 – Hydrants and Flushing Assemblies.
   2. See Section 02669 – Thrust Restraints.

3.03 PREVENTIVE AND CORRECTIVE MEASURES DURING CONSTRUCTION

A. General:
   1. Preventive and corrective measures to protect water mains during construction shall be in accordance with AWWA C651 which states the following:
      (a) Heavy particulates generally contain bacteria and prevent even very high chlorine concentrations from contacting and killing these organisms. Therefore, the procedures of this section must be observed to ensure that a water main and its appurtenances have been thoroughly cleaned for the final disinfection by chlorination.
      (b) Any connection of a new water main to the active distribution system before the receipt of satisfactory bacteriological samples may constitute a cross-connection. Therefore, the new main shall remain isolated until bacteriological tests are satisfactorily completed.

B. Keep Pipe Clean and Dry:
   1. The interiors of pipes, fittings, and valves shall be protected from contamination.
      (a) Openings in the pipeline shall be closed with watertight plugs when pipe laying is stopped at the close of the day's work or for other reasons, such as rest breaks or meal periods. Rodent-proof plugs may be used when watertight plugs are not practicable and when thorough cleaning will be performed by flushing or other means.
      (b) Pipe delivered for construction shall be strung to minimize the entrance of foreign material.
      (c) Delay in placement of delivered pipe invites contamination. The more closely the rate of delivery is correlated to the rate of pipe laying, the lower the risk of contamination.

C. Joints:
   1. Joints of pipe in the trench shall be completed before work is stopped.
   2. If water accumulates in the trench, the plugs shall remain in place until the trench is free of standing water and mud that may enter the pipe.

D. Packing Materials:
   1. Yarning or packing material shall consist of molded or tubular rubber rings, rope of treated paper, or other approved materials.
   2. Materials such as jute or hemp shall not be used.
   3. Packing material shall be handled in a manner that avoids contamination.

E. Sealing Materials:
   1. No contaminated material or any material capable of supporting growth of microorganisms shall be used for sealing joints.
   2. Sealing material or gaskets shall be handled in a manner that avoids contamination.
   3. The lubricant used in the installation of sealing gaskets shall be suitable for use in potable water meeting the requirements of NSF/ANSI 61 and shall not contribute odors.
   4. It shall be delivered to the job in closed containers and shall be kept clean and applied with dedicated clean applicators.
F. Cleaning and Swabbing:
   1. If dirt enters the pipe, it shall be removed and the interior pipe surface swabbed with a minimum 1 percent free chlorine disinfecting solution.
   2. If, in the opinion of the City, the dirt remaining in the pipe will not be removed using the flushing operation, the interior of the pipe shall be cleaned using mechanical means, such as a hydraulically propelled foam pig (or other suitable device acceptable to the purchaser) in conjunction with the application of a minimum 1 percent free chlorine disinfecting solution.
   3. For larger mains, pigging or other suitable method acceptable to the City is an option in place of high-velocity flushing. The cleaning method used shall not force mud or debris into the interior pipe-joint spaces.
G. Wet-Trench Construction:
   1. Wet-trench construction is strictly prohibited. The trench shall be kept dry at all times and the end of the pipe plugged overnight.
H. Chemical Contamination:
   1. If chemical contamination occurs, such as a hydraulic oil leak or petroleum product spill, the pipe sections exposed to the contamination shall be replaced at no additional cost to the City and not reused for potable water applications.
I. Disinfection:
   1. After construction is completed, the main shall be filled, flushed, tested, chlorinated, de-chlorinated, final flushed and bacteriologically tested using the methods described herein.

3.04 TESTING

A. General:
   1. The entire main shall be hydrostatically tested (pressure and allowable leakage test) after thoroughly flushing the new main. Flushing and testing shall be as directed by and witnessed by the City.
   2. The City will provide water for filling, preliminary flushing and testing of the new water mains as specified herein.
   3. The Contractor shall furnish and install all temporary flushing assemblies, fittings, thrust blocks and restraining devices required for temporary connections for filling, flushing and testing all new water mains.
   4. The Contractor shall furnish all pumps, piping, gauges, labor and other materials and services necessary to bring the main up to the specified test pressure.
   5. The contractor shall conduct the pressure test and leakage test simultaneously.
B. Pressure and Allowable Leakage Test:
   1. Pressure and allowable leakage test may be conducted after all trenches have been backfilled, temporary connections made and the main is filled and flushed with water.
   2. Minimum test pressures:
      (a) Mains 12-inches and smaller: a minimum pressure of not less than the normal operating pressure (for the lowest point on the line) plus 50% for surge, but in no case less than 160 psi at the lowest point in the line.

(b) Mains larger than 12-inches: a minimum pressure of not less than the normal operating pressure (for the lowest point on the line) plus 50% for surge but in no case less than 225 psi.

3. Duration of test: pressure shall be maintained on the new water main for at least two (2) hours.
4. All pipe, fittings, valves, hydrants and joints shall be inspected by the Contractor and any evidence of moisture appearing on the surface of the ground during the test shall be investigated by the Contractor by excavation.
5. All defective pipe, fittings, valves or hydrants discovered during the pressure test shall be removed and replaced by the Contractor and the test shall be repeated until satisfactory to the City.
6. Leakage shall be defined as the quantity of water that must be supplied into the newly laid pipe to maintain the specified leakage test pressure.
7. No water main, or section thereof will be accepted if it has a leakage rate in excess of that determined by the following formula:

$$L = [.0000075\ SD(P)^{1/2}]/2$$

Where:

L = Maximum allowable leakage in gallons for two hours.
S = Length of pipe tested, in feet.
D = Nominal internal diameter of the water main being tested in inches.
P = Test pressure in psi.

8. Should the leakage exceed the allowable leakage, the test pressure shall be maintained for an additional period of time so that the leakage location may be detected.

3.05 FLUSHING AND DISINFECTION OF WATER MAINS

A. General:
1. After completion of the pressure and leakage testing, the Contractor shall flush and disinfect the entire main and all branches. The Contractor shall coordinate with the City so that the City's representative is on-site for all flushing and disinfection activities.
2. The Contractor shall provide all labor, materials and equipment required to perform flushing and disinfection.
3. The Contractor shall prepare the main for disinfection by exposing the pipe at all entry points where the chlorine will be introduced into the pipe and installing temporary flushing assemblies at all discharge ends.
4. The continuous feed method of chlorination is required. The slug method of chlorination may be used only when approved or directed by the City.
5. The City will provide water for flushing, chlorinating, de-chlorinating and final flushing of new water mains as specified herein.
6. Temporary connections to the City's water distribution system shall have double valves installed to prevent backflow to the existing system.
7. Water supplied from the source approved by the City shall be used at a flow rate into the new water main so as not to disrupt service to existing customers

B. Flushing:
1. Under the supervision of the City, the Contractor shall flush the new mains to remove all particulates. The flushing velocity in the main shall not be less than 3.0 feet per second unless the City determines that conditions do not permit the required flow. Table 1 shows the rates of flow required to produce the minimum required velocity in commonly used sizes of pipe.

Table 1 – Required Flow to Flush Pipelines at 3.0 feet per second.

Pipe Diameter (inches)	Flow (gpm)
4	120
6	260
8	470
10	730
12	1,060
16	1,880

2. For 36-inch diameter mains and larger, prior to filling the main, the entire main is to be broom swept. Sweepings shall be thoroughly and carefully removed from the pipe.

C. Continuous Feed Method:
1. The water main shall be filled with potable water a constant, measured flow rate. In that absence of a flow meter, the rate may be approximated using a Pitot gauge in the discharge, measuring time to fill a container of known volume, or measuring the trajectory of discharge and using the formula shown in Figure 2 of AWWA C651.
2. At a point not more than 10 feet downstream from the beginning of the new main, water entering the new main shall receive a dose of chlorine fed at a constant rate such that the water will have not less than 60 mg/L free chlorine at the sampling points.
3. To ensure that this concentration is achieved, the chlorine concentration should be measured at regular intervals in accordance with the procedures described in Standard Methods for the Examination of Water and Wastewater or AWWA Manual M12 or using an appropriate chlorine test kit. See Table 4 in AWWA C651 for the amount of chlorine required for various pipe diameters.
4. As an optional procedure, water used to fill the new water main during the application of chlorine shall be supplied through a temporary connection. This temporary connection shall be installed with an appropriate cross-connection control device for backflow protection of the active distribution system. Chlorine application shall not cease until the entire main is filled with heavily chlorinated water.
5. The chlorinated water shall be retained in the main for at least 24 hours, during which time all valves and hydrants shall be operated to ensure disinfection of all appurtenances.
6. At the end of this 24-hour period, the treated water in all portions of the main shall have a residual of at least 45 mg/L free chlorine. Chlorine concentration shall be verified by sampling.

D. Slug Method:
1. Use of the Slug Method requires pre-approval by the City. Submit justification and details of procedure in the Disinfection Plan (see paragraph QUALITY ASSURANCE).
2. Water supplied from an approved source of supply shall be made to flow at a constant, measured rate into the new water main.
3. At a point not more than 10 ft. downstream from the beginning of the new main, water entering the new main shall receive a dose of chlorine fed at a constant rate such that the water will have not less than 100 mg/L free chlorine. To ensure that this concentration is achieved, the chlorine concentration should be measured at regular intervals.
4. The chlorine shall be applied continuously and for a sufficient period to develop a solid column, or “slug” of chlorinated water that will, as it moves through the main, expose all interior surfaces to a concentration of approximately 100 mg/L for at least 3 hours

5. If at any time chlorine residual drops below 50 mg/L, the flow shall be stopped. Then the chlorination equipment shall be relocated at the head of the slug, and, as flow is resumed, chlorine shall be applied to restore the free chlorine in the slug to not less than 100 mg/L.
6. After the required retention period (at least 3 hours), the 3-hour residual chlorine sample shall be pulled, the heavily chlorinated water shall then be de-chlorinated to 0 mg/L chlorine. A reducing agent shall be applied to the water before discharging, to neutralize the chlorine residual in the water.

E. De-chlorinating:
1. Clearing the Main of Heavily Chlorinated Water by De-chlorination:
   (a) After the applicable retention period, the heavily chlorinated water shall be de-chlorinated.
   (b) The heavily chlorinated water shall be de-chlorinated and flushed from the main and all branches achieving chlorine measurements at 0 mg/L chlorine.
   (c) A neutralizing chemical shall be applied to the water to thoroughly neutralize the residual chlorine (see ANSI/AWWA C655 for neutralizing chemicals). Submit product data for neutralizing chemicals with the Disinfections Plan.

F. After de-chlorinating, the new mains shall be final flushed to prepare for the bacteriological tests.

3.06 BACTERIOLOGICAL TESTING

1. The City will perform bacteriological testing, reporting and interpretation of testing results.
2. Contractor shall take water samples in accordance with the approved Disinfection Plan or as directed by the City.
3. City will provide bottles for sampling.
4. The Contactor shall take two (2) sets of Bac-T samples, one immediately after the final flush, the second taken 24 hours later.
5. Contractor shall coordinate disinfectant testing and bacteriological testing to demonstrate that the above requirements have been met.
6. A representative of the City shall be present to observe all sampling.
7. City will provide copies of all bacteriological testing reports to Contractor. Contractor shall submit reports in accordance with paragraph SUBMITTALS.

3.07 FINAL CONNECTION TO EXISTING MAINS

A. New water mains must be disinfected and satisfactory bacteriological sample results received prior to permanent connections being made to the existing distribution system.

B. Sanitary construction practices must be followed during installation of the final connection so that there is no contamination of the new or existing water main with foreign material or groundwater.

C. The new pipe, fittings, and valves required for the connection shall be spray disinfected or swabbed with a minimum 1 percent solution of chlorine just before being installed, if the total length of the connection from the end of a new main to the existing main is equal to or less than 20 feet.

D. If the total length of the connection from the end of a new main to the existing main is greater than 20 feet, the Contractor shall submit the procedures for disinfection as part of the Disinfection Plan. Procedures should comply with AWWA C651.

E. Prior to placing new mains in service, the Contractor shall remove any corporation cocks used for testing or chlorination and replace them with tapered brass plugs.

END OF SECTION

SECTION 02686 – CLEANING AND ASSESSMENT OF GRAVITY LINES

PART 1 - GENERAL

1.01 SUMMARY

A. The work covered by this section consists of furnishing all materials, labor, equipment and supplies required to perform cleaning and inspection of gravity lines and associated structures. All pipe and structures indicated on the drawings shall be cleaned as described herein. The cleaning shall remove all accumulated grease, sand, grit, solids, roots and debris from the pipe in accordance with the specifications and to the complete satisfaction of the City/Design Professional. The inspection/assessment may include one or more of the following technologies: acoustic inspection, closed-circuit television (CCTV), laser profiling, sonar technology, focused electrode leak location (FELL) technology, light detection and ranging (LIDAR) or multi-sensor inspection. The work shall also include all data storage, data transmission, data analysis and the full reporting of the results.

B. Inspection is used to determine the physical condition of a gravity system by viewing and evaluating the inside of the piping. Condition assessments may be used for one or more of the following purposes:
   1. Verify cleaning operations.
   2. Identify defects that may result in eventual pipe failure or allowing infiltration to enter the pipe.
   3. Identify current failures of the pipe.
   4. Identify obstructions.
   5. Locate and classify connections to the pipe including sources of inflow.
   6. Percent ovality of the pipe.
   7. Corrosion and wall loss analysis.
   8. Pre-rehabilitation verification for alignment, bend analysis, and mandrel testing.
   9. Acceptance inspection.

1.02 SPECIFICATION MODIFICATIONS

A. It is understood that throughout this section, these Specifications may be modified by appropriate items in Section 01015 – Specific Project Requirements, or as otherwise indicated on the Contract Drawings. The technologies to be used for the project shall be as listed in Section 01015. If a technology is not specified in Section 01015, then by default, CCTV shall be used for the project.

1.03 RELATED SECTIONS

A. Section 00700 – General Conditions.
B. Section 01015 – Specific Project Requirements.
C. Section 01020 – Record Documents.
D. Section 01300 – Submittals.
E. Section 01566 – Cleanup Operations.
F. Section 01700 – Traffic Control.
G. Section 02580 – Pipe Bursting for Gravity Sewers.
H. Section 03362 – Sanitary Sewer Manhole Rehabilitation.
I. Section 06010 – Cured-in-Place Pipe (CIPP), CIPP Point Repairs and End Seals.

1.04 CODES AND STANDARDS

A. The publications listed form a part of this specification to the extent referenced. The publications are referred to within the text by the basic designation only.

B. National Association of Sewer Service Companies (NASSCO):

1. CCTV inspection, coding, and grading procedures shall be based upon the latest version of NASSCO Pipeline Assessment and Certification Program (PACP) observation classifications.
2. Manhole inspection, coding, and grading procedures shall be based upon the latest version of NASSCO Manhole Assessment and Certification Program (MACP) observation classifications.
3. If lateral launches are specified in Section 01015, lateral inspection, coding and grading procedures shall be based upon the latest version of NASSCO Lateral Assessment and Certification Program (LACP) observation classifications.

1.05 DEFINITIONS

A. Safety Representative: as defined by Section 00700 – General Conditions, Article 6 – Contractor's Responsibilities.

B. Cleaning is defined as the removal of all materials and debris from the gravity line, manholes and all other structures along the gravity line. The cleaning shall restore the gravity line to a minimum of 95 percent of the original carrying capacity. This does not include the removal of hard deposits such as minerals or iron scale.

C. Preconstruction Television Inspection: the requirements for Preconstruction Television Inspections are defined in other Sections of the Contract Documents. Sections that include specific requirements include, but are not limited to, the following:

1. Section 02580 – Pipe Bursting.
2. Section 06010 – Cured-in-Place Pipe (CIPP), CIPP Point Repairs and End Seals.

D. Post-Construction Television Inspection: All post construction CCTV inspection and/or post installation CIPP inspections will follow all requirements listed in this section, in addition to any other requirements listed in the Contract Documents. Sections that include specific requirements include, but are not limited to, the following:

1. Section 02580 – Pipe Bursting.
2. Section 06010 – Cured-in-Place Pipe (CIPP), CIPP Point Repairs and End Seals.

1.06 INFORMATION PROVIDED BY THE CITY

A. As provided in the Contract Documents.

B. Work order numbers, if assigned by the City.

C. "Comp Key" numbers, if assigned by the City.

D. Manhole numbers to be used when unrecorded or unnamed manholes are encountered.

E. GIS shape file or geodatabase of the project area.

F. As-built drawings as needed to complete the scope of work.

1.07 SUBMITTALS

A. Submit as specified in Section 01300 – Submittals.

B. Complete details and specifications covering cleaning procedures, modifications, and equipment to be used.

C. Shop Drawings:

1. Not applicable.

D. Product Data:
   1. Complete details and specifications covering all television inspection equipment. Information shall include, but is not limited to, that required to verify conformance with the following:
      (a) Part 2.03 TELEVISION INSPECTION EQUIPMENT FOR MAINLINE SEWERS.
      (b) Part 2.04 TELEVISION INSPECTION EQUIPMENT FOR CONNECTIONS/LATERALS.
      (c) That the equipment is suitable and can provide video recordings in the resolution and format specified in Part 2.05 VIDEO RECORDINGS.
      (d) That the equipment is suitable and can provide still photographs in the resolution and format specified in Part 2.06 PHOTOGRAPHS.
   2. Inspection procedures:
      (a) Provide example NASSCO PACP Header Form to be used.
      (b) Provide example NASSCO PACP Inspection Form to be used.
      (c) Provide example NASSCO MACP Header Form to be used.
      (d) Provide example NASSCO MACP Inspection Form to be used.
      (e) Provide example NASSCO LACP Header Form to be used (if lateral launches are specified in Section 01015).
      (f) Provide example NASSCO LACP Inspection Form to be used (if lateral launches are specified in Section 01015).
E. Samples:
   1. Not applicable.
F. Other Submittals:
   1. CCTV Operators NASSCO-PACP/MACP/LACP certifications and when utilized, the artificial intelligence software used to identify and assess defects.
   2. Requests for Working Hours Adjustment (as required).
   3. Preconstruction and Post-construction CCTV inspection videos and cable footage meter calibration reports shall be submitted weekly.
   4. Preconstruction and Post-construction inspections shall be submitted monthly, as a condition to payment, and include at a minimum the following:
      (a) Could Not Access (CNA) List: Submit a list of manholes that could not be accessed and why they couldn't be accessed.
      (b) Clearing Request Map: Submit with the CNA List a map showing the requested areas for clearing (as applicable).
      (c) Could Not Locate (CNL) List: Submit a list of manholes that could not be located.
      (d) Could Not Open (CNO) List: Submit a list of manholes that could not be opened.
      (e) Map Change Forms.
      (f) Videos.
      (g) PACP Pipe Run Reports: Reports shall be submitted as individual PDF files for each pipe segment.
      (h) MACP Manhole Reports: Reports shall be submitted as individual PDF files for each manhole (if manhole inspections are specified in Section 01015).
      (i) LACP Lateral Reports: Reports shall be submitted as individual PDF files for each lateral (if lateral launches are specified in Section 01015).
      (j) NASSCO PACP Microsoft Access Database.
      (k) NASSCO MACP Microsoft Access Database.

(l) NASSCO LACP Microsoft Access Database (if lateral launches are specified in Section 01015).

5. Post-construction inspection and documentation shall be submitted as one final consolidated package at the end of the project, as a condition to final completion, and include at a minimum the following:
   (a) Videos.
   (b) Photographs.
   (c) PACP Microsoft Access Database.
   (d) MACP Microsoft Access Database (if manhole inspections are specified in Section 01015).
   (e) LACP Microsoft Access Database (if lateral launches are specified in Section 01015).
   (f) PACP Pipe Run Reports: Reports shall be submitted as individual PDF files for each pipe segment.
   (g) MACP Manhole Reports: Reports shall be submitted as individual PDF files for each manhole (if manhole inspections are specified in Section 01015).
   (h) LACP Lateral Reports: Reports shall be submitted as individual PDF files for each lateral (if lateral launches are specified in Section 01015).
   (i) A log of all manholes located in the field but not included on City maps.
   (j) A log of all manholes included on City maps but not located in the field.
   (h) A log of pipes, manholes and laterals that were inspected before cleaning.

1.08 ACOUSTICAL INSPECTION

A. When specified in Section 01015, an acoustical inspection shall be done as an initial assessment tool to identify blockages in gravity pipes. The acoustical inspection shall be performed in accordance with the Acoustical Systems manufacturer's recommendations in order to establish ratings of 0-10 for obstructions in the pipeline segments being assessed.

B. If acoustical inspection is specified for the project, it shall only be used on sewers 6-inches through 12-inches in diameter.

1.09 2D LIDAR/LASER PROFILING INSPECTION

A. When specified in Section 01015, the CCTV inspection system with laser ring projection or 2D LIDAR head shall be used for inspection/assessment of the gravity line. The color inspection video, from the camera, shall be recorded in mp4 format. 2D Laser/LIDAR shall be used for measuring internal diameters to determine corrosion, wall loss, and/or ovality.

B. Each Inspection shall contain CCTV Pre-Inspection (including header), Profiler Inspection (including header), calibration (horizontal and vertical) and lens distortion validation.

1.10 SONAR INSPECTION

A. When specified in Section 01015, sonar inspection shall be performed according to the Sonar System manufacturer's recommendation as it pertains to survey rate in inches per second to collect data below the flowline. The Sonar Inspection System shall operate in real time mode with continuous interior scanning over full 360 degrees. Digital data shall be recorded at full resolution.

1.11 3D LIDAR INSPECTION

A. When specified in Section 01015, 3D LIDAR inspection shall be performed according to the LIDAR manufacturer's specifications for assessment of the gravity line. LIDAR scans shall be used to measure internal diameters to determine corrosion, wall loss, and/or ovality.

B. When specified for pre-rehabilitation, only 3D LIDAR can be used for determining alignment, bend analysis, and virtual mandrel testing for construction purposes.

1.12 MULTI-SENSOR INSPECTION

A. When specified in Section 01015, multiple inspection technologies/sensors shall be used in synchronization to assess the interior of the pipe. This can include, but is not limited to, CCTV, Sonar, 2D Laser or 3D LIDAR, hydrogen sulfide gas sensor and/or temperature sensor. Where applicable, the analysis of data from each technology will be used to verify one another, providing a visual representation of the internal pipe with laser-LIDAR above the flow line and sonar measurement below the flow line. In all scenarios, high-definition CCTV must be used. After processing, all data and reporting deliverables shall be delivered to the City/Design Professional.

1.13 FOCUSED ELECTRODE LEAK LOCATION (FELL) TESTING FOR POST CURED-IN-PLACE PIPE (CIPP) MAINS

A. When specified in Section 01015, acceptance testing and certification of repairs, relining, and renewal, shall be performed using Focused Electrode Leak Locating (FELL) and shall be performed by an independent third-party contractor, in accordance with the ASTM F2550, Standard Practice for Locating Leaks in Sewer Pipes By Measuring the Variation of Electric Current Flow Through the Pipe Wall and the Seventh Edition, Volume 1, MAINTENANCE AND OPERATION OF WASTEWATER COLLECTION SYSTEM manual (December 2015) ISBN 978-1-59371-066-8, where Focused Electrode Leak Locating is referred to as Electro Scanning Inspection.

B. The contractor shall furnish all necessary labor, equipment, materials, services and incidentals required to record inspection by means of Focused Electrode Leak Locating technology on City designated, rehabilitated gravity sewer line sections from manhole to manhole (or from clean out to mainline for laterals), including but not limited to, charts and graphs, and final overall report. The report shall include a graph and chart outlining the location of all defects and the magnitude of each. The report shall include an estimate of the size of the defect and the potential infiltration of each, with a total for all.

C. Post-Rehabilitation FELL Testing shall be performed on the lineal footage specified in Section 01015 of all rehabilitated mainline pipes that receive CIPP lining, selected at random by the City, paid for at the established unit prices in the Contract. The City reserves the right to perform additional post-rehabilitation FELL testing at the established unit prices in the Contract.

D. Qualifications: All FELL inspections shall be done with the use of an approved supplier of the Focused Electrode Leak Locating technology equipment that meets ASTM F2550-13, Standard Practice for Locating Leaks in Sewer Pipes by Measuring the Variation of Electric Current Flow through the Pipe Wall. Only those licensed and pre-approved by the equipment manufacturer shall be allowed to perform the Work. Submit certification of licensing and training in accordance with Section 01300 – Submittals.

1.14 AUTO DETECTION/AUTO CLASSIFICATION SOFTWARE

A. When specified in Section 01015, the contractor shall use an artificial intelligence (AI) software to analyze the CCTV inspection footage of the gravity line. The software shall automatically detect and classify every defect per established NASSCO PACP standards.

1.15 QUALITY ASSURANCE

A. The Contractor is responsible for the quality assurance and quality control of the Work. Contractor shall employ minimum quality control methods that meet or exceed those required by the latest versions of NASSCO.
B. Contractor shall employ only experienced personnel who are familiar with, and regularly engaged in, the type of work required; shall provide adequate supervision by a qualified supervisor at all times when cleaning is in progress; and shall have access to the equipment of proper size and capacity to perform the work as specified herein.
C. All inspections, post processing, and quality control shall be conducted by NASSCO certified PACP/MACP/LACP operators (Operators).
D. Contractor shall submit a copy of each Operator's NASSCO certification(s) and ID card with Name, Certification Number, and Expiration Date clearly visible. The NASSCO certification(s) shall be current upon Notice to Proceed. If the operator's certification expires during the Work, documentation of recertification shall be provided to the City prior to the expiration.
E. All videos, photographs, and audio recordings are subject to acceptance by the City. Equipment that does not produce a picture or audio quality acceptable to the City shall be replaced. For deliverables that are not accepted by the City, the inspection shall be re-conducted at no additional cost to the City.
F. The data and information provided by the Contractor shall be delivered in strict accordance with the naming conventions for assets described herein. Information included as part of the final deliverables that cannot be associated with the Comp Keys provided, or does not meet the naming conventions specified, will not be accepted.
G. Data cleanliness, handling, labeling, naming conventions, PACP coding standards, organization, and security are of the utmost importance to the City. Any CCTV videos, reports, or database not in compliance with this Section shall not be accepted.

1.16 PRODUCT DELIVERY, STORAGE AND HANDLING

A. Product Delivery for weekly deliverables shall be electronically uploaded to a City-designated site. Weekly submittals shall not represent interim acceptance by the City, with any quality control or quality assurance concerns, corrections, or required modifications, to be included in any and all final deliverables.
B. Product Delivery for final consolidated package shall be delivered on an external, portable hard drive that will become the property of the City. Each external hard drive or digital file in the data set shall be given a unique name/label. The Contractor shall include an electronic photograph index that identifies the photographs by file name located on each external hard drive or digital file folder. The hard drive shall include a README text file that includes the following information:
    1. Name of Project.
    2. City Project Number.
    3. City Contract Number.
    4. Date of Submittal.

5. Contractor Name.
6. Contractor Address.
7. Name of Contractor's Representative.
8. Phone Number of Contractor's Representative.
9. Email of Contractor's Representative.

C. Storage of all source media will be the sole responsibility of the Contractor and must be stored and properly maintained for a period of thirty-six (36) months after Contractor's Substantial Completion date, available to the City or its designated representatives within ten (10) business days of the written request.

D. All work product and deliverables shall be in digital format, or in a format requested by the City. Additionally, three paper copies of the final report shall also be provided.

1.17 SAFETY PLAN

A. The Contractor's responsibilities for safety are defined by Section 00700 – General Conditions, Article 6 – Contractor's Responsibilities.

B. Entrance into any manhole is considered a Permit Required Confined Space.

C. In addition to the safety requirements of Section 00700, the Contractor shall develop and implement a project-specific, comprehensive safety plan to address safety concerns related to the Work.

D. The Safety Plan shall be submitted to the City prior to commencement of pipeline inspections.

E. At a minimum, the safety plan shall conform to the following guidelines:
   1. The work area shall be properly barricaded to direct pedestrian and vehicular traffic away from the work site following local and state traffic control requirements and the latest edition of the Manual of Uniform Traffic Control Devices (MUTCD) and Section 01700 – Traffic Control.
   2. The plan shall describe personal protective equipment (i.e. hard hats, reflective safety vests and other required personal protective equipment) to be worn.
   3. The plan shall describe all personal protective equipment to be worn while handling hazardous material (sewage).
   4. The plan shall describe all confined space entry protocols.
   5. Work shall be scheduled to avoid rush hour traffic when possible.

F. The Safety Plan shall include the name and contact information of the Contractor's Safety Representative with a description of their job duties and level of responsibility with respect to the Work described in this section.

1.18 SCHEDULING THE WORK

A. Generally, the Work is to be conducted during times allowed by Section 00700, Article 6, Contractor's Responsibilities and Section 01000 – General Project Requirements, paragraph TEMPORARY ENVIRONMENTAL PROTECTION which establishes hours of operations.

B. See additional instruction for scheduling the Work in Section 01015 – Specific Project Conditions.

PART 2 - PRODUCTS

2.01 ACOUSTICAL INSPECTION EQUIPMENT

A. Contractor shall own, lease and/or rent one (1) set (minimum) of acoustical assessment equipment as manufactured by Infosense Incorporated (SL-Rat equipment). The set includes an acoustic transmitter and a signal receiver.

2.02 CLEANING EQUIPMENT

A. The equipment selected for cleaning shall be capable of removing all dirt, grease, rock, brick, wood, sand, mud, roots and other deleterious materials and obstructions from the gravity line. Cleaning shall be performed using hydraulically-propelled, high-velocity and/or mechanically-powered cleaning equipment and vacuum removal equipment.

1. Hydraulically powered equipment: The equipment used shall be of a movable dam type and be constructed in such a way that a portion of the dam may be collapsed at any time during the cleaning operation to protect against flooding of the sewer or bypassing to waterways. The movable dam shall be equal in diameter to the pipe being cleaned and shall provide a flexible scraper around the outer periphery to ensure removal of grease. If sewer cleaning balls or other equipment which cannot be collapsed are used, special precautions shall be taken that are acceptable to the Owner, to prevent flooding of sewers and property.
2. High velocity equipment: All high-velocity cleaning equipment shall be constructed for ease and safety of operation. The equipment shall have a minimum of 700 feet of one inch minimum diameter hose with working pressure ratings to match the rating of the water pressure. The equipment shall have a selection of two or more high-velocity nozzles. The nozzles shall be capable of producing a scouring action from 10 degrees to 45 degrees in all sizes of gravity lines included in this Contract using a minimum volume of 60 gallons of water per minute, at a minimum working pressure of 2,000 pounds per square inch. Special care shall be taken when cleaning CIPP rehabilitated pipelines by using a wide spray nozzle with a maximum spray angle of 30 degrees, a nozzle pipe centralizer and a maximum pressure of 2,000 PSI.
   (a) Equipment shall also include a high-velocity gun for washing and scouring the manholes and diversion structure walls, channels, shelves, floors, and manhole covers and frames from grade level. The gun shall be capable of producing flows from a fine spray to a solid stream. The equipment shall carry its own water tank, auxiliary engines, pumps, and hydraulically-driven hose reel. Filler piping on the tank shall have an air gap to prevent backflow and contamination of the water supply system.
3. Mechanically powered equipment: Bucket machines shall be in pairs with sufficient power to perform the work in an efficient manner. Machines shall be belt operated or have an overload device. Machines with direct drive that could cause damage to the pipe will not be allowed. A power rodding machine shall be either a sectional or continuous rod type. To ensure safe operation, the machine shall be fully enclosed and have an automatic safety clutch or relief valve.

2.03 TELEVISION INSPECTION EQUIPMENT FOR GRAVITY LINES

A. All television inspection equipment shall be specifically designed and manufactured for the inspection purposes intended under this Contract.

B. Video cameras/recorders not specifically intended for use for internal television inspection of gravity lines will not be allowed.

C. The Contractor shall conduct CCTV inspections using a self-propelled tractor unit. The tractor unit shall have the following minimum features and capabilities:

1. The camera shall be designed specifically for gravity pipe inspections and the appropriate diameter.
2. The camera shall be capable of operating in 90% humidity.
3. For 8 inch through 46 inch pipes, the camera shall have a minimum of 640 lines of resolution.
4. For 48 inch and larger pipes, the camera shall have a minimum of 1280 lines of resolution.
5. The camera shall have either automatic or remote: focus and iris control.
6. The camera shall have zoom, pan and tilt capabilities to facilitate defect viewing and evaluation. Digital zoom is acceptable when utilizing equipment with HDCCTV.
7. The unit shall be equipped with lights capable of lighting the entire periphery of the pipe. The illumination shall allow an even distribution of the light around the perimeter of the pipe without the loss of contrast or flare out of picture shadowing.
8. Cable Footage Meter:
   (a) The unit shall be equipped with a cable footage meter so that the location of defects and service laterals relative to the starting manhole location can be reported.
   (b) The cable footage meter shall be able to reach a minimum of 1,000 feet.
   (c) The cable footage meter shall be accurate to 0.5 feet per 100 feet (0.5%).
   (d) The cable footage meter shall be calibrated in accordance with paragraph CABLE FOOTAGE METER CALIBRATION.
9. Camera must have capability to position camera head in the middle of the pipe (example: camera head will be 4-inches from pipe invert in an 8-inch pipe) by adjusting elevator or by varied wheel sizes. For pipe sizes 48-inch and larger, Contractor shall submit the proposed equipment for City approval.
10. In no case shall cameras be equipped with carbide-tipped wheels that increase traction and potentially harm post-rehabilitation lining or pipe wall interiors. Any damage caused to post-rehabilitation repairs, relining, or rehabilitation will be the sole responsibility of the Contractor to correct or repair to the City's satisfaction.

2.04 TELEVISION INSPECTION EQUIPMENT FOR CONNECTIONS/LATERALS

A. If laterals or connecting pipes are to be inspected, the Contractor may use one of the following:

1. Inspections from the mainline: a self-propelled tractor unit that incorporates a lateral launch camera tool.
2. Inspections from a cleanout: a push camera system provided especially for lateral inspections.

B. The lateral equipment shall have the following minimum features and capabilities:

1. The camera shall be designed specifically for lateral pipe inspections and the appropriate diameter.
2. The camera shall be capable of operating in 100% humidity.
3. The camera shall have a minimum of 640 lines of resolution.
4. The unit shall be equipped with lights capable of lighting the entire periphery of the pipe. The illumination shall allow an even distribution of the light around the

perimeter of the pipe without the loss of contrast or flare out of picture shadowing.

C. In the event of a full-length lateral rehabilitation, from the mainline connection to the house, a full-length lateral inspection shall be conducted.

2.05 VIDEO RECORDINGS

A. Contractor shall perform sewer pipe inspections from access point to access point unless a pipe converges into another pipe alignment at a fitting; then the inspection shall be performed from access point to fitting as shown in figure 2.1.

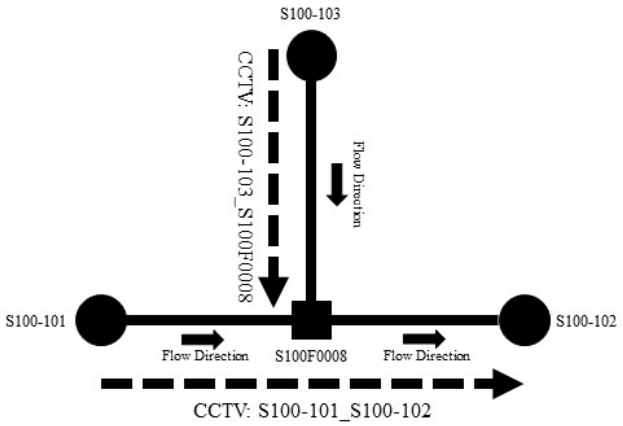

Figure 2.1: Performing Sewer Pipe Inspections

B. Each video television inspection shall be submitted in digital format with associated video, images, report, and all inspection data included in a Microsoft Access Database.

C. All video recordings shall be recorded and provided in digital MPEG-4 Part 14 (MP4) format.

D. All video recordings shall be in color.

E. File Naming Convention – Mainline Sewers:

1. Each line segment video shall be named using the upstream manhole identifier, underscore, downstream manhole identifier, underscore, date stamp, underscore and inspection direction (no exceptions). Use “U” for upstream and “D” for downstream inspection direction.
2. For example, the video for the line segment from manhole S023-314 to manhole S023-317 inspected upstream to downstream would be labeled as follows: S023-314_S023-317_YYYYMMDD_D. Any deviation from the File Naming Convention for Mainlines will not be accepted.

E. File Naming Convention – Service Laterals:

1. Each service lateral video shall be named using the upstream manhole identifier, underscore, downstream manhole identifier, underscore, date stamp, underscore, inspection direction, underscore, Tap Feature Code, underscore, and lateral location in feet from start of inspection. Use “U” for upstream and “D” for downstream inspection direction.
2. For example, the video for a rehabilitated sewer service 50 feet downstream from manhole S023-314 on line segment S023-314_S023-317 would be labeled as

follows: S023-314_S023-317_YYYYMMDD_D_TRA_50. Any deviation from the File Naming Convention for Laterals will not be accepted.

F. Videos shall not be filtered, clipped, edited, modified, enhanced, or otherwise changed, except for overlay corrections. In no event shall videos have missing frames or sections of video.

2.06 PHOTOGRAPHS

A. All photographs shall be recorded and provided in a digital format.
B. Photographs shall be provided in JPEG file format.
C. All photographs shall be in color.
D. File Naming Convention:
   1. Digital photograph files shall be named using the associated video file name, associated defect code, and linear footage (in 3-digits) assigned to the defect for each line segment survey (**no exceptions**).
   2. For example, if a picture is taken May 25, 2021, at a Hole Soil Visible defect, 75 linear feet upstream against the direction of flow (reverse set up), on a line segment located south of the Missouri River on atlas map 24 between manholes 500 (upstream manhole) and 498 (downstream manhole), then the digital photograph file name would be as follows:
      S024-500_S024-498_20210525_U_HSV_75

2.07 SOFTWARE

A. The CCTV data shall be delivered utilizing the latest version of NASSCO PACP certified software.
B. The latest version of the Data Viewer shall be provided at the start of the inspection.
C. If specified, the artificial intelligence (AI) software for detecting and classifying defects shall be:
   1. SewerAI.
   2. Molfar.AI.
   3. City approved equal.

2.08 LASER / 2D LIDAR PROFILING INSPECTION EQUIPMENT

A. All laser profile inspection equipment shall be specifically designed and manufactured for the inspection purposes intended under this Contract.
B. Laser Profilers and 2D LIDAR sensors shall be Laser Safety Class II and certified eye-safe as per US – IEC 60825-1 standard.
C. All laser/LIDAR equipment shall be calibrated regularly to ensure accuracy of +/- 5mm in pipes 20-inches or larger.
D. Contractor shall own, lease and/or rent at a minimum one (1) each of the MSI SuperMD Profiler and MSI MD Profiler as manufactured by RedZone Robotics and one (1) CUES SolidFX Profiling system for the duration of the field work associated with the Work.

2.09 SONAR INSPECTION EQUIPMENT

A. The sonar equipment must be specifically designed for use in sanitary sewer systems using high frequency sound waves to locate and map irregularities within the pipe environment creating continuous sonar images recorded in “real time” mode.
B. Sonar equipment must be capable of continuous data collection throughout each applicable pipe segment reach and contain sufficient information to produce a visual

profile, profile comparison, and dimensions data of significant debris and/or defects. This includes depth, volume and cross-sectional area along the length of pipe.

C. When specified, sonar inspections, either on their own or through multi-sensor inspection, shall be utilized prior to any cleaning in pipes 21" and greater to provide evidence that cleaning is required. Post verification inspections shall be a combination of CCTV and/or Sonar, as flow permits.

2.10 3D LIDAR INSPECTION EQUIPMENT

A. Contractor shall own, lease and/or rent at a minimum one (1) each of the MSI Responder tracked crawler as manufactured by RedZone Robotics for the duration of the field work associated with the Work.

B. 3D LIDAR inspection equipment should be capable of inspections in pipes 36 inches and larger.

C. When pre-rehabilitation inspection that requires alignment, bend analysis, or virtual mandrel testing is specified, a 3D LIDAR must be used for proper accuracy and modelling.

D. LIDAR sensor shall be Class I eye-safe as per US – IEC 60825-1 standard.

E. High-definition CCTV shall be captured when any LIDAR inspection is performed.

2.11 MULTI-SENSOR INSPECTION EQUIPMENT

A. Multi-sensor inspection equipment must be capable of synchronized sensor measurement, collected during a single deployment of the equipment. Where applicable, the analysis of data from each technology will be used to verify one another. All sensors shall be zeroed at the beginning of the pipe segments.

B. Equipment must be operated via a tracked crawler or floating platform specifically designed for inspection in gravity lines.

C. Equipment shall be capable of long-distance deployments and have tether length of 3000 linear feet, and sufficient power (battery or otherwise) to operate at those lengths. It is permissible to inspect through multiple access points, provided that sensor data is zeroed at the beginning of each new pipe segment.

D. When specified, multi-sensor inspection equipment shall be utilized prior to any cleaning in pipes 21" and greater to provide evidence that cleaning is required. Post verification inspections shall be a combination of CCTV and/or Sonar, as flow permits.

2.12 FELL INSPECTION EQUIPMENT

A. The Focused Electrode Leak Locating technology system used for the pipeline assessment shall be specifically designed and constructed for such inspection. This equipment and proposed solution shall be in full compliance with and have capabilities as outlined in ASTM F2550-13 Standard Practice for Locating Leaks in Sewer Pipes by Measuring the Variation of Electric Current Flow through the Pipe Wall.

B. Instrumentation must represent a complete and fully functioning device to scan the pipe and record all pipe defects capable of causing leaks. The proposed solution must include any recommended accessories and spare parts necessary to complete this work.

PART 3 - EXECUTION

3.01 OBSERVATION OF WORK

A. City reserves the right to be present and continuously observe the work and information being displayed at the recording site.

3.02 TRAFFIC CONTROL

A. Traffic control and signage for the inspection operation shall be the responsibility of the Contractor and shall be acceptable to the City.
B. Traffic Control shall be conducted in accordance with Section 01700 – Traffic Control.

3.03 LOCATING MANHOLES/STRUCTURES

A. For the work required by the contract documents, the Contractor shall locate, make open and accessible all existing manholes, structures and access points.
B. The Contractor will be responsible for conducting a reasonable search to locate missing manholes. The minimum effort to locate missing manholes should include:
   1. Conducting a field search.
   2. A comparison of verified field conditions against available City information.
   3. Utilization of specialty equipment such as metal detectors.
C. If after conducting a reasonable search, a manhole cannot be found in the area specified by the sewer maps, then the Contractor should seek City assistance.

3.04 UNRECORDED/UNNAMED MANHOLES

A. Manholes located in the field, which are not shown on the Drawings shall be documented for submittal.
B. If an unrecorded/unnamed manhole is encountered, television inspection may proceed, but the Contractor shall notify City and request a City assigned manhole number and comp key. Manhole numbers and Comp Keys be obtained from the City and the final deliverable data shall be modified to reflect the assigned manhole number and comp key on any segment connected to an unrecorded/unnamed manhole.
C. Contractor shall submit weekly to the City: a Map Change Form with Unrecorded/Unnamed Manholes showing the revised system connectivity, photographs of the location, and a brief description of the location of each Unrecorded/Unnamed Manhole.

3.05 ACOUSTICAL ASSESSMENT

A. Assessment shall be done one pipe segment at a time between two adjoining structures or manholes. The flow within pipeline is irrelevant to the assessment.
B. The unit set shall be calibrated daily prior to starting the assessment.
C. The following information is required by the City: manhole ID's upstream and downstream for the pipeline segment being assessed, assessment date, pipeline length, notes, etc. Prior to initiating the acoustical assessment, all information shall be entered into the unit for each segment.
D. During the assessment, the software will designate a numerical value to the quality of the sound sent and received (rating of 0-10) giving a nominal assessment of Good, Fair, Poor or Blocked.
E. Each night the data shall be transferred from the field assessment equipment to the SL-Dog software installed on a PC.

F. The assessment data shall be provided to the City/Design Professional in CSV (Excel), SHP (Arc GIS) or PDF. The data deliverables shall be solely at the discretion of City/Design Professional.
G. The City/Design Professional will be responsible for the review and analysis of the data provided.

3.06 CLEANING

A. It is the responsibility of the Contractor to properly apply for, secure and provide for all water needed to perform the cleaning work described herein.
Precautions shall be taken to protect the sanitary sewer structures from damage that may result from improper use of the cleaning equipment. Contractor is responsible for traffic control, as needed; in addition to Contractor's truck warning lights and traffic cones, as needed or required. Traffic control is subject to review and approval by the Owner. If successful cleaning cannot be performed without risk of damage to the pipe, or if the equipment fails to traverse the entire line segment, cleaning efforts shall be temporarily suspended, and the Owner shall be notified. The line segment shall then be evaluated in order to determine if the segment can be adequately cleaned. Any unusual conditions found during the cleaning operations shall be reported to the Owner as soon as possible.
B. Any modifications to manholes to facilitate cleaning shall be the Contractor's responsibility and shall be subject to approval by Owner.
Contractor shall salvage and reuse all manhole covers and rings that are removed during sewer line and manhole rehabilitation, unless otherwise directed by Engineer.
C. When pumping and bypassing is required, Contractor shall supply the pumps, piping, and other equipment necessary to divert the flow of wastewater around the sewer section being cleaned and back into the interceptor sewer. All existing wastewater flows, plus waters added to the flow due to cleaning, shall be contained within the existing sewer system. The bypass system shall have the necessary capacity to handle all the flow.
The Contractor shall be responsible for furnishing the labor and supervision necessary to set up and operate the pumping and bypass system. For pumping and bypassing operations, a plan must be submitted in accordance with the procedures set forth in the submittals section. In performing the work under this Contract, Contractor shall be thoroughly familiar with federal, state, and local statutes, ordinances, and directives with respect to excessive noise and pollution of air and water due to construction operations. If pumping and bypassing is required, engines shall be equipped in a manner to keep noise to a minimum.
D. During sewer cleaning operations, satisfactory precautions shall be taken in the use of cleaning equipment. When hydraulically propelled cleaning tools, which depend on water pressure to provide their cleaning force, or tools which retard flow in the sewer line are used, precautions shall be taken to ensure that the water pressure created does not damage or cause flooding to public or private property being served by the sewer being cleaned or does not cause bypassing of flow to nearby waterways.
The flow of wastewater in the sewers shall be utilized to provide necessary pressures of hydraulic cleaning devices whenever possible. When additional water is required from other sources to avoid delay in normal work procedures, the water shall be conserved and not used unnecessarily. No fire hydrant shall be obstructed in case of fire in the area served by the hydrant. The Contractor shall be responsible for all damage to public and private property as a result of all cleaning operations. The cost

of restoring any damaged area to conditions prior to cleaning shall be borne by the Contractor at no additional cost to the Owner.

E. All roots shall be removed. Special attention shall be given during the cleaning operation to assure complete removal of roots from the joints. Procedures may include the use of mechanical equipment such as rodding machines, bucket machines and winches using root cutters and porcupines, and equipment such as high-velocity jet cleaners. Chemical root treatment may be used at the option of the Contractor. When chemicals are used to aid in the removal of roots, the chemical shall be EPA registered and labeled for use in sewer lines and acceptable to all applicable State and City agencies. All material and mixing/application procedures for chemical root treatment shall be consistent with the latest standards, requirements, and recommendations of the manufacturer of the chemical root treatment material used.

F. All sludge, dirt, sand, grit, rocks, bricks, wood, mud, grease, roots and any other solid or semi- solid material resulting from the cleaning operation shall be removed using vacuum removal equipment or other methods to assure debris does not cause downstream obstruction. Vacuum equipment shall be suitable for removal of all debris at each manhole location for each line being cleaned. Vacuum system performance will be at least 4,000 CFM and 16” Hg vacuum pressure to ensure all debris can be efficiently removed from the sewer. A device designed to minimize debris from escaping down the sewer line, the design and use of which is subject to approval by Owner, shall be used in all sewer line cleaning operations. When hydraulic cleaning equipment is used, a suitable sand trap, weir, basket, or dam shall be constructed in the downstream manhole in such a manner that the solids will be trapped while using a rake or sewer shovel to help collect solids. Material or debris removed from the sewer shall be immediately placed in watertight containers. Containers may include valved drains to remove excess water from containers. Drainage, including rainfall, shall be contained and returned to the sewer by means acceptable to the Owner.

G. Multiple passes (one to three passes) with the water jet shall be made, as required, to flush the debris to the manhole in order to remove the debris. Sewers will be cleaned by introducing the water jet into the sewer line facing against the sewer flow and retrieving the water jet under pressure with the sewer flow. The nozzle shall not be stopped in the sewer line when under working pressure, but shall continue to move through the line at all times.

H. All debris removed from the sewer shall be legally disposed of by and at the expense of the Contractor. The disposal facility shall be a permitted landfill. The debris shall be dewatered and suitable for immediate disposal prior to weighing at the landfill. Contractor shall provide the Engineer with scale tickets to verify quantities of debris disposed of in an approved landfill. Transportation of debris or other material by the Contractor shall be done in vehicles or equipment which contain the debris or other material in such a manner to minimize objectionable odor and avoid the possibility of dripping, spilling, scattering, leaking, or blowing. Should mishaps occur for any reason, the Contractor shall be responsible for cleaning up any debris or other material to the satisfaction of the Owner or other authorities having jurisdiction. All vehicles transporting debris or other material shall not exceed the maximum allowable load limits of any road being used.

I. Contractor shall televise the sewers, in accordance with the television inspection section, upon the completion of cleaning. Acceptance of sewer line cleaning shall be based upon the review of the inspection videos by the City or Design Professional.

If cleaning inspections show the cleaning to be unsatisfactory, the Contractor shall be required to re-clean and re-inspect the sewer line, at no additional cost to the Owner, until cleaning is shown to be satisfactory.

3.07 SEWER FLOW DIVERSION AND CONTROL

A. During CCTV inspection, the pipe should be free of obstructions that impede visibility. The depth of flow at the upstream manhole of the sewer line section being inspected shall not exceed 15 percent of the pipe diameter. As necessary, Contractor shall divert flow to allow for the CCTV inspection to capture as much of the invert of the pipe as possible. In pipes 21 inches or larger, where sonar or multi-sensor inspection is specified, flow diversion is not required.

B. A sewer line plug may be installed upstream of the section being inspected. Sewer plugs are always installed in the upstream (incoming) pipe of a manhole. It is desirable that the plug be equipped with an air hose to permit deflation from above ground. A strong rope should be attached to enable the plug to be quickly pulled out of the manhole. Care must be taken to prevent a plug from being pushed into the outgoing pipe when the backed-up sewage is released.

C. When pumping and diverting flow is required, pumps, conduits, and other equipment shall be used to divert the flow of sewage around the manhole section in which work is to be performed. The diversion system should have sufficient capacity to handle the existing flow plus additional flow that may occur. Bypass pumping plan to be submitted to the City for approval.

D. When the flow in a sewer line is reduced, plugged, or diverted, precautions must be taken to ensure that the operations do not cause flooding or damage to public or private property. Contractor should closely monitor sewer surcharging upstream of the manhole section being inspected and be alert for situations such as residential flooding that would be likely to occur. Contractor is responsible for all backups, spills, or damage that may occur from plugging or diversion efforts.

3.08 CABLE FOOTAGE METER CALIBRATION

A. Calibration of the cable footage meter shall be done by checking the cable counter against a pre-measured length of 50 to 300 feet. At least one out of every five calibrations shall be in excess of 200 feet.

B. At a minimum, calibration of the cable footage meter shall be conducted each day before the first use of the equipment, or as directed by the City.

C. If a cable footage meters fails a calibration test, then all inspections completed since the last successful calibration shall be re-inspected at no additional cost to the City.

D. The results of all calibration testing shall be submitted in accordance with paragraph SUBMITTALS.

E. In no case shall footage readings start at anything more than 0.00.

3.09 PIPE PREPARATION

A. As needed or as indicated in the Contract Documents, the Contractor shall clean the sewer lines in accordance with Section 02676 – Sewer Line Cleaning prior to CCTV work.

B. All fog condensation shall be evacuated from the pipeline and the pipeline kept clear of any fog condensation during the inspection process.

C. When sonar or multi-sensor inspection is specified for pipes 21 inches and larger, inspection shall be performed prior to any cleaning, to provide evidence that cleaning

is required. Post verification inspections shall be a combination of CCTV and/or Sonar, as flow permits.

3.10 INSPECTION METHODS

A. Camera image shall be down the center axis of pipe when camera is in motion. Provide 360-degree sweep of pipe interior at points of interest to more fully document condition of existing sewer. Points of interest may include, but are not necessarily limited to, the following: defects, obstructions, encrustations, mineral deposits, debris, sediment, lateral connections, and any location determined not to be clean.
B. The direction of the camera should be noted. Per NASSCO standards, inspections in the downstream direction are preferred.
C. The display shall always begin with the numbering from upstream manhole to downstream manhole. If a reverse setup is attempted, the same numbering system will be used, but the direction of camera will be switched.
D. The television camera shall be a self-propelled unit.
E. The rate of camera travel shall be slow enough to allow a thorough inspection of each pipe joint, tee connection, structural deterioration, defect, I/I source, deposits in the sewer line, and to record observations.
F. The camera travel speed shall not exceed a rate of 30 feet per minute.
G. Lighting during the inspection should adequately, but not excessively, illuminate the immediate area.

3.11 RECORDING OF FEATURES AND DEFECTS

A. The CCTV Inspection shall capture the following minimum information:
   1. Starting point in the launch manhole panning up to see the general condition of the manhole and other incoming/outgoing pipes.
   2. Ending point at the downstream manhole (or upstream manhole for reverse setups) panning up to see the general condition of the manhole and other incoming/outgoing pipes.
   3. Defects and Points of Interest: The camera shall be stopped at each defect or other feature. The camera lens shall be rotated, panned and/or tilted to clearly show each defect or feature. The Contractor shall capture defects with still photographs.
   4. Service Connections: The camera shall be stopped at each service connection. The camera lens shall be rotated, panned and/or tilted to clearly show each connection. The Contractor shall capture service connections with still photographs.

3.12 INSPECTION AND DOCUMENTATION

A. PACP Pipe Run Report:
   1. A separate inspection form, otherwise known as a pipe run report, shall be produced for inspections of each complete sewer length between manholes.
   2. The Pipe Run Report shall be completed in accordance with the latest NASSCO PACP requirements.
   3. General information should be documented on CCTV inspection field forms prior to beginning inspection activity for each pipe run section, including:
      (a) Project name.
      (b) Operator's name.
      (c) Operator's NASSCO PACP certificate number.

(d) Inspection date/time (i.e., the date that the camera initiated or completed its inspection).
(e) Pipe diameter.
(f) Pipe material.
(g) Direction of inspection (upstream/downstream).
(h) Upstream and downstream manhole numbers.
(i) Street location.
(j) Inspection footage.
(k) An alphanumeric tape/media number.
(l) The level of cleaning before, or after, the investigation.
(m) It should be noted if the pipe was cleaned before, or after, CCTV work.

4. The information documented on CCTV inspection field forms for each pipe run section should include, at a minimum, the following:
   (a) A description of each service connection, type of each service connection, and defect observed.
   (b) The location of each service connection and defect reported as the distance from the start of the inspection.
   (c) The location of each service connection and defect reported with respect to the pipe axis.
   (d) A reference to each photograph taken. Each photograph reference should include:
   The location of the photograph from the start of the inspection.
   A description of the defect or connection.
   A reference to the electronic photograph file name.
5. The field form format shall be that produced by a City approved software with PACP coding.

B. Video:
1. Electronic video shall be made for each line segment inspection.
2. All video recordings shall become the property of the City upon inspection completion and acceptance. The video cost shall be included in the unit price. Each video shall be prefaced with the following minimum information:
   (a) Inspection date.
   (b) Inspection time.
   (c) Prevailing weather conditions.
   (d) Upstream/Downstream manholes indicating connectivity.
   (e) Direction of inspection.
   (f) Pipe diameter.
   (g) Pipe material.
3. The videos shall include a report of the current inspection distance relative to the starting position.
4. The audio recording shall state the following minimum information:
   (a) Date of inspection.
   (b) Time of inspection.
   (c) Description of weather during the inspection.
   (d) Operator name.
   (e) Nearest street name.
   (f) Upstream and downstream manhole numbers.
   (g) Direction of the inspection in relation to the direction of flow.
   (h) Pipe diameter and material type.
   (i) Description of each service connection and pipe defect.

C. Photographs:
   1. Digital photographs shall be taken of each significant structural defect, I/I source, and service connection.
   2. The location of each photograph along with photograph file name shall be recorded.
   3. Photographs shall be supplied as JPEG images or another approved format.
   4. Digital photograph files are to be named as described in paragraph 2.05. D.

D. PACP Microsoft Access Database:
   1. Technical: The PACP Microsoft Access Database shall be written in the latest version. The video and photo reference location/path shall be limited to one single folder named 'Video' and 'Picture', respectively. In no event shall files be password protected or otherwise inaccessible to the City, with any incorrect field or data entries the responsibility of the Contractor.
   2. Header: The PACP Microsoft Access Database shall include, at a minimum, all the PACP mandatory header fields and the following non-mandatory or City-specific changes to the header fields:
      (a) Field 1 – Name of the Contractor in a format agreed upon with the City. (Note, this is different than the Field 1 requirement in NASSCO).
      (b) Field 7 – P/O Number. Defined as the Inspector's contract number assigned by the CITY in four (4)-digit format.
      (c) Field 8 – Work Order Number. Work order number or inspection number if assigned by the CITY.
      (d) Field 14 – Weather.
      (e) Field 20 – Inspection Technology Used.
      (f) Field 25 – Pipe Segment Reference. (Upstream Access Point UNITID_ Downstream Access Point UNITID).
      (g) Field 35 – Lining Method, if applicable.
      (h) Field 38 – Total Length (Anticipated Length from CITY GIS). Note, this field is only to be completed in the event of an MSA or partial survey.
      (i) Field 39 – Length Surveyed.
   3. All header fields shall be completed using the PACP abbreviations and units as defined in NASSCO PACP.
   4. Inspection Form:
      (a) The CCTV inspection form within the PACP access database shall be completed in accordance with NASSCO requirements and include the following additions:
      The "Video Time" shall be included at the appropriate time in the CCTV video that represents the defect or feature code.
      The remarks column shall be used to identify Drop Connections, Diversion Structure, Lamp Holes, Grit Chambers, etc.

E. If specified, the artificial intelligence (AI) software shall be used to analyze the CCTV footage in order to identify and classify each defect. The reporting of results shall be as described herein. The contractor shall rectify all discrepancies between the original pipe run report and the AI software pipe run report. The contractor shall document and track the discrepancies in order to calculate the percent accuracy of the operator and the AI software over time.

F. MACP Manhole Report:
   1. A manhole inspection form shall be produced for each manhole inspected.
   2. The Manhole Report shall be completed in accordance with the latest NASSCO MACP requirements.

3. General information shall be documented on the manhole inspection form prior to beginning the inspection for each manhole. This information includes:
   (a) Project name.
   (b) Operator's name.
   (c) Operator's NASSCO MACP certificate number.
   (d) Inspection date/time.
   (e) Unique Manhole identifier/UNITID.
   (f) Manhole diameter.
   (g) Manhole material.
   (h) Pipe sizes in/out.
   (i) Flow direction in/out.
   (j) Street/cross street location.
4. Digital photographs shall be taken of each significant structural defect, I/I source, and service connection.
5. Photographs shall be supplied as JPEG images or another approved format.
6. Digital photograph files are to be named as described in paragraph 2.05. D.

G. MACP Microsoft Access Database:
1. Technical: The MACP Microsoft Access Database shall be written in the latest version. The photo reference location/path shall be limited to one single folder named 'Picture'. In no event shall files be password protected or otherwise inaccessible to the City, with any incorrect field or data entries being the sole responsibility of the Contractor.
2. Header: The MACP Microsoft Access Database shall include, at a minimum, all the MACP mandatory header fields and the following non-mandatory or City-specific changes to the header fields:
   (a) Field 1 – Name of the Contractor in a format agreed upon with the City. (Note, this is different than the Field 1 requirement in NASSCO).
   (b) Field 7 – P/O Number. Defined as the Inspector's contract number assigned by the CITY in four (4)-digit format.
   (c) Field 8 – Work Order Number. Work order number or inspection number if assigned by the CITY.
   (d) Field 14 – Weather.
   (e) Field 20 – Inspection Technology Used.
   (f) Field 27 – Inflow Potential from Runoff.
   (g) Field 28 – Locations Details.
   (h) Field 72 – Frame Depth.
   (i) Field 88 – Wall Diameter (Length).
   (j) Field 72 – Frame Depth.
   (k) Field 88 – Wall Diameter (Length).
   (l) Field 118 – Structure ID (Pipe/Lateral Segment Reference).
3. All header fields shall be completed using the MACP abbreviations and units as defined in NASSCO MACP.
4. Inspection Form:
   (a) The Manhole inspection form within the MACP access database shall be completed in accordance with NASSCO requirements and include the following addition:
      (i) Field 106 shall be used to identify Diversion Structures, Lamp Holes and Grit Chambers.
      (ii) Field 119 shall be used to identify Drop Connections.

H. LACP Lateral Report (if specified in Section 01015):
   1. A separate inspection form, otherwise known as a lateral report, shall be produced for inspections of each lateral.
   2. The Lateral Report shall be completed in accordance with the latest NASSCO LACP requirements.
   3. General information should be documented on the Lateral inspection field forms prior to beginning the inspection of each lateral. This information includes:
      (a) Project name.
      (b) Operator's name.
      (c) Operator's NASSCO LACP certificate number.
      (d) Inspection date/time (i.e., the date that the camera initiated or completed its inspection).
      (e) Lateral diameter.
      (f) Lateral material.
      (g) Location of lateral from upstream and downstream manhole numbers.
      (h) Location of lateral with respect to pipe axis.
      (i) Type of service lateral: residential or commercial.
      (j) Street/cross street location.
      (k) Inspection footage.
      (l) An alphanumeric tape/media number.
   4. The information documented on Lateral inspection field forms for each lateral should also include, at a minimum, the following:
      (a) A description of each lateral service connection, type of each service connection (tap, saddle, etc.) and defects observed.
      (b) The location of each lateral defect reported as the distance from the start of the lateral inspection.
      (c) A reference to each photograph taken. Each photograph reference should include:
         (i) The location of the photograph from the start of the lateral inspection.
         (ii) A description of the defect or connection.
         (iii) A reference to the electronic photograph file name.
   5. The lateral field form format shall be that produced by a City approved software with LACP coding.

I. Lateral Video:
   1. Electronic video shall be made for each lateral inspection.
   2. All video recordings shall become the property of the City upon inspection completion and acceptance. The video cost shall be included in the unit price. Each video shall be prefaced with the following minimum information:
      (a) Inspection date.
      (b) Inspection time.
      (c) Prevailing weather conditions.
      (d) Upstream/Downstream manholes from lateral.
      (e) Lateral diameter.
      (f) Lateral material.
   3. The videos shall include a report of the current inspection distance relative to the starting position.
   4. The audio recording shall state the following minimum information:
      (a) Date of inspection.
      (b) Time of inspection.
      (c) Description of weather during the inspection.

(d) Operator name.
(e) Nearest street name.
(f) Upstream and downstream manhole numbers.
(g) Lateral diameter and material type.
(h) Description of each lateral service connection and connection defects.

J. Photographs:
1. Digital photographs shall be taken of each significant structural defect, I/I source, and connection.
2. The location of each photograph along with photograph file name shall be recorded.
3. Photographs shall be supplied as JPEG images or another approved format.
4. Digital photograph files are to be named as described in paragraph 2.05. D.

K. LACP Microsoft Access Database:
1. Technical: The LACP Microsoft Access Database shall be written in the latest version. The video and photo reference location/path shall be limited to one single folder named 'Video' and 'Picture', respectively. In no event shall files be password protected or otherwise inaccessible to the City, with any incorrect field or data entries being the sole responsibility of the Contractor.
2. Header: The LACP Microsoft Access Database shall include, at a minimum, all the LACP mandatory header fields and the following non-mandatory or City-specific changes to the header fields:
(a) Field 1 – Name of the Contractor in a format agreed upon with the City. (Note, this is different than the Field 1 requirement in NASSCO).
(b) Field 7 – P/O Number. Defined as the Inspector's contract number assigned by the CITY in four (4)-digit format.
(c) Field 8 – Work Order Number. Work order number or inspection number if assigned by the CITY.
(d) Field 14 – Weather.
(e) Field 20 – Inspection Technology Used.
(f) Field 25 – Pipe Segment Reference. (Upstream Access Point UNITID_ Downstream Access Point UNITID).
(g) Field 35 – Lining Method, if applicable.
(h) Field 39 – Length Surveyed.
3. All header fields shall be completed using the LACP abbreviations and units as defined in NASSCO LACP.
4. Lateral Inspection Form:
(a) The CCTV Lateral inspection form within the LACP access database shall be completed in accordance with NASSCO requirements and include the following additions:
(i) The "Video Time" shall be included at the appropriate time in the CCTV Lateral video that represents the defect or feature code.

3.13 2D LASER/LIDAR PROFILING INSPECTION

A. CCTV Preparation: Per CCTV inspection requirements, which includes relevant header information such as asset name, manholes, type, etc. as required in this Section. This CCTV inspection shall be used in conjunction with the profiling to complete the analysis of the pipeline.

B. Profile Inspection: Header Details shall comply with CCTV inspection requirements by the City. Standard manufacturer's headings will normally suffice, with City approval. Header Field 'Profile Direction' shall also be included. Valid inputs are

"Upstream" or "Downstream". Flow Depth for Ovality Analysis flow shall not exceed 1/3 full. For Corrosion Analysis of the pipe walls, flow shall not exceed 1/3 full and shall be performed during lowest flow period. The camera head will be configured to a central position in the pipe (+/-15%). Laser ring or 2D LIDAR sensor shall be clear, central and take up between approximately 2/3 and 3/4 of the vertical screen. Lights shall be turned off. Distance counter shall be displayed. Distance counter shall not overlap the laser ring. All other text shall be removed from screen. Camera shall be in Home position (0.0) for the entirety of the profile inspection. Recording shall be from start manhole to end manhole. Profiling shall be performed in either a forward or reverse direction however this shall be clearly displayed in the header details of the profile inspection. The camera and laser system shall be moved through the pipe at a constant speed not to exceed 10 meters or 30 feet per minute. The tractor shall not stop in the pipe during the profile inspection. The camera shall not perform pan or tilt during profile inspection. Pan and tilt shall be performed during the CCTV lights on inspection.

C. Calibration: Calibration shall be performed using the same CCTV camera and video recording medium as used for the inspection. The calibrator shall be assembled as per manufacturer's instructions and shall be performed using the exact CCTV camera and laser configuration used in the profile inspection. The calibrator shall be clearly viewed (focused) and without glare on screen. The calibrator shall be recorded in the horizontal position and in the vertical position. The video image shall be included in the submitted Inspection video.

D. CCTV Camera Lens Correction: To validate camera lens correction, a flat "Lens correction grid" shall be placed perpendicular to camera lens recorded using the same CCTV camera and video recording medium as used for the inspection. All text shall be removed from the screen. The checkers shall be clearly viewed (focused) and without glare on screen. The video image shall be recorded and be included in the submitted Inspection video.

E. Software Analysis: The inspection video shall be loaded into the profiling software. The correct camera option shall be selected based on CCTV camera used in the profile inspection. The selected camera option shall be automatically stamped into the data file so that the settings cannot be changed. The camera setting shall be displayed in the profiling data file.

   1. Horizontal and vertical calibration shall be performed on the calibration segment of the inspection video. The profile pipe selection shall be from start of pipe asset (beside start manhole) to end of pipe asset (beside end manhole), and selected using the start and end markers in the profile software. The profile software shall be tuned to the laser ring so as to provide maximum number of profile points. A water/debris mask shall be positioned to mask the highest water/debris point in the pipe.
   2. The data file shall be recorded at 25 to 30 profile cross-sections per second and linked to the profile inspection segment of the video. The recorded video shall be used to provide quantitative information of pipe diameter, ovality and corrosion.

F. Laser Profile Data: A NASSCO/PACP certified CCTV operator with profiler software training (Ovality analysis only) or a qualified profiler analyst employed by the equipment manufacturer shall be used to analyze and report structural condition of pipeline using all or some of the following sensors: laser, CCTV. Due to the complex nature of corrosion, all Corrosion and/or Wall Loss Reports must be created by a qualified profiler analyst employed by the equipment manufacturer.

G. Ovality Reports: The Condition Analysis of Plastic Pipe: Ovality (as per ASTM F1216). Reports shall be presented as an Ovality Observation Report - a line graph displaying Ovality of the pipe over the length of the inspected pipe asset. Where water or debris exists, the software shall use a mask for the non-structural segment to calculate Ovality. A 'Match to Reference Shape and Size' observation shall be shown for each pipe highlighting a cross-section where the actual pipe shape and size closest matches (as determined by engineer):

1. The As-Built diameter, or
2. The median calculated diameter over the entire pipe length
3. Cross-sectional observations should be taken where the structural Ovality threshold exceeds 5% (or as directed by the municipality).
4. Project reports are to be shown as One Mile Ovality Flat Reports – made up of a colored flat graph and a line graph that clearly shows ovality over the 5% threshold (or as directed by the municipality).
5. The flat graph is a colored map of the circular dimensions of the pipe over the length of the inspected pipe asset. Measured pipe ID that coincides with expected values must be coded white.
6. Areas where the data is greater than the pipe ID must be colored on a yellow/red color scale. Areas where the data is smaller than the pipe ID must be colored on a blue scale. The line graph will be aligned with the flat graph, clearly showing ovality above the desired threshold.
7. Deflection Reports – Alternative Option for Condition Analysis of Plastic Pipe
   a. X and Y Diameter Reports shall be presented as an XY Deflection Observation Report – a line graph displaying and XY deflection of the pipe over the length of the inspected pipe asset. Where water or debris exists, the software shall use a mask for the non-structural segment to calculate the X and Y diameters. A 'Match to Reference Shape and Size' observation shall be shown for each pipe highlighting a cross-section where the actual pipe shape and size closest matches the median calculated diameter for each cross-section
   b. Cross-sectional observations should be taken where the X and Y deflection threshold exceeds 5% (or as directed by the municipality).

H. Corrosion Reports: The Analysis of Concrete Pipe – Corrosion, Wall Loss and Buildup Reports shall be presented in a Flat Observations Report. A color map of the circular dimensions of the pipe over the length of the inspected pipe asset. Measured pipe ID that coincides with expected values must be coded white. Material loss (corrosion), as measure by increasing pipe ID must be colored on a yellow/red color scale, with red color set to ½ of the expected wall thickness. Material gain (buildup), as measured by decreasing pipe ID, must be on a blue color scale. A "Match to Reference Shape and Size" observation should be shown for each pipe highlighting a cross-section where the actual pipe shape closest matches the reference shape and size. Cross-sectional observations should be taken to highlight areas of worst corrosion. Due to the complex nature of corrosion, all Corrosion Reports must be created by a qualified profiler analyst employed by the equipment manufacturer.

3.14 SONAR INSPECTION

A. The purpose of the Sonar inspection shall be to document conditions as specified in this Section and as a pre-cleaning evaluation. The Contractor shall document sewer line operational and structural conditions and/or cleaning results.

B. The Contractor shall keep Sonar Inspection Logs providing location records of the sewer mains inspected. The Logs shall be kept and maintained by the Contractor in a digital format. These location records shall clearly show the stationing location from manhole to manhole. Hard copies of the inspection reports shall be bound and submitted to the City with the digital data. The digital information shall contain multiple video inspection records and files that store each line segment as a unique digital record.

C. The Contractor shall use CCTV to assess the condition of the pipe above the flowline and sonar inspection to assess the condition below the flowline. The Contractor shall provide a digital video file of the inspection. The digital video files must include the location of the line segment at the time the inspection is performed. At a minimum, the video file shall also display manhole numbers and footage at all times. The purpose of the digital recording is to provide a visual record of all line segments that are inspected. Slow motion and stop-motion features shall also be provided. The Contractor shall have all digital video and necessary playback equipment readily accessible for review by the City during the project. The digital video file shall be a deliverable and shall be required for completion of the work for each segment inspected. The digital video files (recorded on the approved digital storage media) shall be indexed with the line segment and labeled appropriately on the disc. Video recordings shall be processed by the Contractor and delivered to the City after completion of the Sonar inspection for review. Video and reports shall be submitted via hard copy, CD-ROM, removable hard drive or DVD Data disk.

D. The Contractor shall provide pipeline reports containing visual profile, profile comparison and dimension data of significant defects where flows are greater than 12-inches in depth. The report shall include longitudinal pipeline cross sections showing the debris profile and depth, volume and cross-sectional area along the length of pipe.

3.15 3D LIDAR INSPECTION

A. CCTV Preparation: Per CCTV inspection requirements, which includes relevant header information such as asset name, manholes, type, etc. as required in this Section. This CCTV inspection shall be used in conjunction with the profiling to complete the analysis of the pipeline.

B. LIDAR Inspection: Header Details shall comply with CCTV inspection requirements by the City. Standard manufacturer's headings will normally suffice, with City approval. Header Field 'Profile Direction' shall also be included. Valid inputs are "Upstream" or "Downstream". Flow Depth for Ovality Analysis flow shall not exceed 1/3 full. For Corrosion Analysis flow shall not exceed 1/3 full and shall be performed during lowest flow period. The camera head will be configured to a central position in the pipe (+/-15%). Recording shall be from manhole to manhole. Scanning shall be performed in either a forward or reverse direction. Scans shall be taken when the robotic unit is stopped and stabilized to reduce shift in the point cloud scans. For Ovality, Wall Loss and Corrosion assessment, a scan must be taken every 5-6 linear feet and must be tagged with the tether distance to determine location the scan was taken in the pipe. For Alignment, Bend Radius, and Virtual Mandrel Analysis, a scan must be taken every 2-3 linear feet and must be tagged with the tether distance to determine location the scan was taken in the pipe.

C. LIDAR Data: Due to the complex nature of LIDAR data. All reports must be created by a qualified profiler analyst employed by the equipment manufacturer. This

includes Ovality, Wall Loss, Corrosion, Alignment, Bend Radius, and Virtual Mandrel Reports.

D. Ovality Reports: The Condition Analysis of Plastic Pipe: Ovality (as per ASTM 1216). Reports shall be presented as an Ovality Observation Report - a line graph displaying Ovality of the pipe over the length of the inspected pipe asset. Where water or debris exists, the software shall use a mask for the non-structural segment to calculate Ovality. A 'Match to Reference Shape and Size' observation shall be shown for each pipe highlighting a cross-section where the actual pipe shape and size closest matches (as determined by engineer):

1. The As-Built diameter, or
2. The median calculated diameter over the entire pipe length
3. Cross-sectional observations should be taken where the structural Ovality threshold exceeds 5% (or as directed by the municipality).

4. Project reports are to be shown as One Mile Ovality Flat Reports – made up of a colored flat graph and a line graph that clearly shows ovality over the 5% threshold (or as directed by the municipality).

5. The flat graph is a colored map of the circular dimensions of the pipe over the length of the inspected pipe asset. Measured pipe ID that coincides with expected values must be coded white.

6. Areas where the data is greater than the pipe ID must be colored on a yellow/red color scale. Areas where the data is smaller than the pipe ID must be colored on a blue scale. The line graph will be aligned with the flat graph, clearly showing ovality above the desired threshold.

7. Deflection Reports – Alternative Option for Condition Analysis of Plastic Pipe
   a. X and Y Diameter Reports shall be presented as an XY Deflection Observation Report – a line graph displaying and XY deflection of the pipe over the length of the inspected pipe asset. Where water or debris exists, the software shall use a mask for the non-structural segment to calculate the X and Y diameters. A 'Match to Reference Shape and Size' observation shall be shown for each pipe highlighting a cross-section where the actual pipe shape and size closest matches the median calculated diameter for each cross-section
   b. Cross-sectional observations should be taken where the X and Y deflection threshold exceeds 5% (or as directed by the municipality).

E. Corrosion and Wall Loss Reports: The Analysis of Concrete Pipe – Corrosion, Wall Loss and Buildup Reports shall be presented in a Flat Observations Report. A color map of the circular dimensions of the pipe over the length of the inspected pipe asset. Measured pipe ID that coincides with expected values must be coded white. Material loss (corrosion), as measure by increasing pipe ID must be colored on a yellow/red color scale, with red color set to ½ of the expected wall thickness. Material gain (buildup), as measured by decreasing pipe ID, must be on a blue color scale. A "Match to Reference Shape and Size" observation should be shown for each pipe highlighting a cross-section where the actual pipe shape closest matches the reference shape and size. Cross-sectional observations should be taken to highlight areas of worst corrosion. Due to the complex nature of corrosion, all Corrosion Reports must be created by a qualified profiler analyst employed by the equipment manufacturer. Deliverables shall include, but not limited to, electronic files, pdf documents, Microsoft Excel spreadsheets, or other formats requested by the City/Design Professional.

F. Alignment, Bend Radius, and Virtual Mandrel Reports: The Analysis of a pipe in preparation for rehabilitation through lining, slip-lining, or geopolymers shall be presented via plan drawings and 3D models. All LIDAR scans must be aligned and constrained to survey-grade coordinates of the access points. Any bends, horizontal or vertical deflection, or curvature of the pipe shall be noted by the location in the pipe and the radius or degree of the bend. For Virtual Mandrel Analysis, liner manufacturer specifications such as the internal diameter (ID), outer diameter (OD), joint deflection, and length of the liner segment must be provided in order to process and determine successful rehabilitation.

3.16 MULTI-SENSOR INSPECTION

A. Equipment shall be calibrated and deployed per the manufacturers' specifications. Each inspection record and recording shall be limited to a single (1) sewer segment. Combining multiple sewer segment inspections in one (1) recording shall not be permitted.

B. The Contractor shall keep Multi-Sensor Inspection Logs providing location records of the gravity lines inspected. The Logs shall be kept and maintained by the Contractor in a digital format. These location records shall clearly show the stationing location from manhole to manhole. Hard copies of the inspection reports shall be bound and submitted to the City with the digital data.

C. The multiple inspection technologies shall be used to develop a visual representation of internal pipe conditions above the flow line using Lidar-laser measurement and below the flow line using sonar measurement, combined with high-definition video inspection. The Contractor shall provide a digital video file of the inspection. The digital video files must include the location of the line segment at the time the inspection is performed. At a minimum, the video file shall also display manhole numbers and footage at all times. The purpose of the digital recording is to provide a visual record of all line segments that are inspected. Slow motion and stop-motion features shall also be provided. The Contractor shall have all digital video and necessary playback equipment readily accessible for review by the City during the project. The digital video file shall be a deliverable and shall be required for completion of the work for each segment inspected. The digital video files (recorded on the approved digital storage media) shall be indexed with the line segment and labeled appropriately on the disc. Video recordings shall be processed by the Contractor and delivered to the City after completion of the Sonar inspection for review. Video and reports shall be submitted via hard copy, CD-ROM, removable hard drive or DVD Data disk.

D. Where other sensors are used in conjunction with the CCTV, Contractor shall provide the required reports as specified in 3.13, 3.14, and/or 3.15.

3.17 FELL INSPECTION

A. The inspection shall be performed on one sewer line section (i.e., manhole to manhole or clean out to mainline) at a time. Flow within the section is irrelevant except within the area of the inspection probe, which will be 100 percent flooded to within three (3) feet of the probe in both directions.

B. The probe shall be pulled through the line a uniform rate in compliance with operator discretion. The rate of inspection should not be greater than 60 feet per minute, and the rate should not exceed the capability of encapsulating the probe with water.

C. For each gravity line inspected, executing the FELL testing shall begin with a light flushing of the gravity line and then using a hydraulic jet hose and reel to pull the

FELL probe through the pipe. The gravity line shall be flushed from the downstream manhole, the nozzle removed at the upstream manhole, a Sliding Funnel Plug shall be attached to the hose, and the FELL probe shall be attached to the Plug. The hydraulically powered jet truck shall then pull the probe through the pipeline while simultaneously providing the water necessary for the probe to electrically examine the pipe walls.

D. All data will be fed back to a PC via a standard coaxial cable. Once the data is collected on the laptop computer, it shall be uploaded to a Cloud-Based portal where it will be instantly processed and available for Owner/engineer/contractor and staff to view. This portal shall be a secure site and only accessible by Owner code and pathway security.

E. The equipment manufacturer's custom and proprietary algorithms shall be used to grade the size and type of each leak, defects, or possible defects, and graphically display the defect grade size, type and frequency for each manhole-to-manhole pipeline section. In addition, the manufacturer's software shall provide an estimated GPM gallons per minute, and GPD gallons per day infiltration rate per defect and for the entire pipeline segment being assessed. All shall be in accordance with ASTM 2550-13.

F. Contractor shall provide the fully analyzed Focused Electrode Leak Locating pipe testing results to the Owner within 72 hours of testing each section of pipe via uploading each scan to the Owner's licensed viewing platform or document management system with the following information:
   1. Owner and State.
   2. Date of Inspection.
   3. Location of Inspection.
   4. Pipeline size, type, and overall length.
   5. Graph showing:
      a. Defect start / end and overall length (ft.).
      b. Potential GPM infiltration estimation based on the hydrogeological approach.
      c. Percentage of potential GPM infiltration per defect.
      d. Defect Threshold (Small, Medium, Large).
      e. Overall chart indicating GPM Summary in Detail.

G. If specified by the City, Premium Reporting shall be provided. CCTV of the installed CIPP shall be obtained and reviewed in conjunction with the processing of FELL results. Defects shall be categorized and assigned to the main line or service connections with their associated GPM and GPD infiltration rates showing the following information:
   1. Minor flow and percentage of Total Flow.
   2. Moderate flow and percentage of Total Flow.
   3. Severe flow and percentage of Total Flow.
   4. Total GPM.
   5. Total GPD.
   6. Total GPD / IDM.

H. Acceptance of all testing shall be at the sole discretion of the City/Design Professional. The City will be responsible for the review and analysis of the post CIPP CCTV and FELL testing.

I. Correction of defects identified shall be at the sole discretion of the City.

3.18 DELIVERABLES

A. All information developed as part of this section shall be considered a record document. Management and submittal of this information shall conform to this Section, Section 00700 – General Conditions, Article 6, Contractor's Responsibilities and Section 01020 – Record Documents.

3.19 CLEAN UP

A. The Contractor shall keep premises free from accumulation of waste materials, rubbish, and other debris generated by Contractor's operations.
B. Cleanup shall be conducted in accordance with Section 01566 – Cleanup Operations.

3.20 MEASUREMENT AND PAYMENT

A. Unless otherwise specified in the Contract Documents, all work associated with cleaning and the inspection technology or technologies utilized shall be considered ancillary and will not be measured for payment. All labor, material, equipment and deliverables costs shall be included in the Bid.

END OF SECTION

SECTION 02702 – TESTING REQUIREMENTS FOR SANITARY SEWER: MAINS AND MANHOLES

PART 1 - GENERAL

1.01 SUMMARY

A. This section covers the testing of all sewer mains and manholes. The Contractor shall provide all materials, labor and equipment to complete the testing requirements in accordance with this section. All costs pertaining to testing shall be included in the lump sum bid.

1.02 SPECIFICATION MODIFICATIONS

A. It is understood that throughout this section, these Specifications may be modified by appropriate items in Section 01015 – Specific Project Requirements or as otherwise indicated on the Contract Drawings.

1.03 RELATED SECTIONS

A. Section 01015 – Specific Project Requirements.
B. Section 01300 – Submittals.
C. Section 02687 – Laser Profiling of Sewer Mains.
D. Section 03362 – Manhole Rehabilitation.
E. Section 03370 – Sanitary Sewer Manhole Construction.
F. Section 05010 – Sanitary Sewer Manhole Castings.

1.04 QUALITY ASSURANCE

A. The Contractor is responsible for the quality assurance and quality control of the Work.

1.05 INFORMATION PROVIDED BY THE CITY

A. As provided in the Contract Documents.

1.06 CODES and STANDARDS

A. The publications listed below form a part of this specification to the extent referenced. The publications are referred to within the text by the basic designation only. The version of the codes and standards in effect at the time of the Notice to Bidders shall be used, except as noted on the Drawings or in the Specific Project Requirements section of these specifications.

B. American Society for Testing and Materials (ASTM):

ASTM C828 – Low-Pressure Air Testing of Vitrified Clay Pipe Lines.

ASTM C969 – Standard Practice for Infiltration and Exfiltration Acceptance Testing of Installed Precast Concrete Pipe Sewer Lines.

ASTM C1244 – Standard Test Method for Concrete Sewer Manholes by the Negative Air Pressure (Vacuum) Test.

ASTM F1417 – Installation Acceptance of Plastic Gravity Sewer Lines Using Low-Pressure Air.

C. American Water Works Association (AWWA):

AWWA C600 – Installation of Ductile-Iron Water Mains and Their Appurtenances.

1.07 CONTRACTOR SUBMITTALS

A. Submit the following in accordance with Section 01300 – Submittals:
   1. Testing plan, procedures and schedule.
   2. Testing equipment.

PART 2 - PRODUCTS

Not Used.

PART 3 – EXECUTION

3.01 GENERAL

A. The City/Design Professional must witness the pressure and leakage test for it to be a valid test.
B. All sewer main joints and all manholes shall be watertight and free from leaks.
C. There is zero allowable leakage. All defects causing infiltration/exfiltration shall be corrected at no additional cost to the City.

3.02 SAFETY

A. All work shall be performed in accordance with applicable Occupational Safety and Health Administration (OSHA) standards.

3.03 SEWER PIPE ALIGNMENT AND GRADE TESTING

A. The alignment, grade and visible defects shall be checked as follows:
   1. Prior to inspection, the Contractor shall clean and flush the sewer main with clear water to remove excess mortar, joint sealant, dirt, debris etc.
   2. All sewer mains shall be mandrel tested to determine ovality, the presence of any misaligned, displaced, or broken pipes and other defects.
   3. All defects shall be corrected prior to conducting the pressure and leakage test.

3.04 PRESSURE AND LEAKAGE TEST FOR INFILTRATION/EXFILTRATION

A. Sewer pipe infiltration/exfiltration testing:
   1. There shall be zero leakage on the infiltration/exfiltration test.
   2. The Contractor shall perform hydrostatic or air pressure tests on all sewers before acceptance by the City. The Contractor shall provide all materials, labor and equipment required including, but not limited to, the following: water, necessary piping connections, test equipment, water meter, pressure gauges, bulkheads, and fittings required for hydrostatic or air pressure testing.
   3. Pressure and leakage testing for Infiltration/Exfiltration testing shall be conducted. Where evidence of infiltration/exfiltration is discovered by the Contractor or by the City/Design Professional, the Contractor shall repair or replace the defective reach of pipeline at no additional cost to the City. Following repair of the pipeline, the Contractor shall re-test and make additional repairs until zero infiltration/exfiltration is achieved.

4. Pressure and leakage testing for Infiltration/Exfiltration shall be performed by the Contractor using the methods as set forth below. The required testing shall be successfully performed on carrier conduits prior to filling the void between the casing and the carrier conduits with sand or the sealing of the ends of the casing conduits.
   a. Air Testing of Gravity Systems:
      (1) Each section of gravity pipeline between manholes and/or structures after backfill shall be tested as outlined below.
      (2) Contractor shall furnish all materials, labor and equipment required including necessary piping connection, test pumping equipment, pressure gauges, bulkheads, regulator to avoid over pressurization, and all miscellaneous items required.
      (3) The pipe plug for introducing air to the sewer line shall be equipped with two taps. One tap will be used to introduce air into the line being tested through suitable valves and fittings, so that the input air may be regulated. The second tap will be fitted with valves and fittings to accept a pressure test gauge indicating internal pressure in the sewer pipe. Additional valve and fitting will be incorporated on the tap used to check internal pressure so that a second test gauge may be attached to the internal pressure tap. The pressure test gauge valve may also be used to indicate loss of air pressure due to leaks in the sewer line.
      (4) The pressure test gauge shall meet the following minimum specifications:

Size (diameter)	4-1/2 inches
Pressure Range	0-15 psi
Figure Intervals	1 psi increments
Minor Subdivisions	0.05 psi
Pressure Tube	Bourdon Tube or diaphragm.
Accuracy	+/-0.25% of maximum scale
Dial	White coated aluminum with black lettering, 270degree arc and mirror edge.
Pipe Connection	Male 1/2 inch N.P.T.

      Calibration data will be supplied with all pressure test gauges. Certification of pressure test gauge will be required from the gauge manufacturer. This certification and calibration data will be available to the City/Design Professional whenever air tests are performed.
      (5) Plug ends of line and cap or plug all connections to withstand internal pressure. One of the plugs provided must have two taps for connecting equipment. After connecting air control equipment to the air hose, monitor air pressure so that internal pressure does not exceed 5.0 psig. After reaching 4.0 psig, throttle the air supply to maintain between 4.0 and 3.5 psig for at least two (2) minutes in order to allow equilibrium between air temperature and pipe walls. During this time, check all plugs to detect any leakage. If plugs are found to leak, bleed off air, tighten plugs, and again begin supplying air. After temperature has stabilized, the pressure is allowed to decrease to 3.5 psig. At 3.5 psig, begin timing to determine the time required for pressure to drop to 2.5 psig. If the time, in seconds, for the air pressure to decrease from 3.5 psig to 2.5 psig is greater than that shown in the table below, the pipe shall be presumed free of defects.

Minimum Test Times in Plastic Pipe

Pipe Diameter (in)	Minimum Time (min:secc)	Length for Minimum Time (ft)	Time for Longer Length (sec)
4	3:46	597	.380 L
6	5:40	398	.854 L
8	7:34	298	1.520 L
10	9:26	239	2.374 L
12	11:20	199	3.418 L
15	14:10	159	5.342 L
18	17:00	133	7.692 L
21	19:50	114	10.470 L
24	22:40	99	13.674 L
27	25:30	88	17.306 L
30	28:20	80	21.366 L
33	31:10	72	25.852 L
36	34:00	66	30.768 L
42	39:48	57	41.883 L
48	45:34	50	54.705 L
54	51:02	44	69.236L
60	56:40	40	85.476L

L = Total Length

If air test fails to meet above requirements, repeat test as necessary after all leaks and defects have been repaired and backfilled.
Before the manhole vacuum test is performed and in areas where ground water is known to exist, install a one-half inch diameter capped pipe nipple, approximately 10" long, through manhole wall above one of the sewer lines entering the manhole. This shall be done at the time the sewer is installed. Immediately prior to the performance of the line acceptance test, ground water level shall be determined by removing pipe cap, blowing air through pipe nipple into the ground so as to clear it, and then connecting a clear plastic tube to pipe nipple. The hose shall be held vertically and a measurement of height in feet of water shall be taken after the water stops rising in this plastic tube. The height in feet shall be divided by 2.3 to establish the pounds of pressure that will be added to all readings. If the air pressure required for the test is greater than 9 psig, the air test method will not be allowed. Instead, an infiltration test shall performed by the Contractor.

(6) If Polyvinyl Chloride (PVC) gravity sewer pipe is used it shall be air-tested in accordance with the requirements of ASTM F-1417.

b. Hydrostatic Tests for Pressure Systems (Sewer Force Mains):
   (1) Conformance Procedure: The Contractor shall perform hydrostatic pressure and leakage tests for all sewer force mains. The test shall conform to AWWA C600 procedures except as modified herein. There shall be zero leakage/drop in pressure.
   (2) Sectionalizing: Test in segments between sectionalizing valves, between a sectionalizing valve and a test plug, or between test plugs. Contractor shall furnish and install test plugs at no additional cost to the City, including all anchors, braces, and other devices to withstand hydrostatic pressure on plugs. Contractor shall be responsible for any damage to public or private property caused by failure of plugs. Limit fill rate of line to available venting capacity. Fill rate shall be regulated to limit velocity in lines when flowing full to not more than 0.05 to 1.0 fps.
   (3) Pressure and Leakage Test: Conduct at 1.5 times the maximum operating pressure, but not less than 100 psi, for a minimum of two hours:

$$L = (0.0000075\ SD(P)^{1/2})/2$$ where

L = 2 hour allowable make-up water (gallons)
S = length of pipe tested (ft.)
D = nominal pipe diameter (in)
P = test pressure (psig)

3.05 SEWER PIPE DEFLECTION TESTING

A. The mandrel testing shall be conducted again thirty days after final trench backfill.
B. The mandrel device shall be cylindrical in shape and constructed with nine (9) evenly spaced arms or prongs. Mandrels with fewer arms will be rejected as not sufficiently accurate. The rigid mandrel shall have an outside diameter (O.D.) equal to 95 percent of the inside diameter (I.D.) of the pipe. The inside diameter of the pipe, for the purpose of determining the outside diameter of the mandrel, shall be the average outside diameter minus two minimum wall thicknesses for O.D. controlled pipe and the average inside diameter for I.D. controlled pipe. Dimensions shall be per appropriate standard. The "D" mandrel dimension shall carry a tolerance of + or - 0.01 inch. Allowances for pipe wall thickness tolerances or ovality (from heat, shipping, poor production, etc.) shall not be deducted from the "D" dimension but shall be counted in as a part of the five (5) percent or lesser deflection allowance. Contact length (L) shall be measured between points of contact on the mandrel arm. The length shall not be less than twelve inches.
C. The mandrel shall be hand-pulled by the Contractor through all flexible sewer lines. Any sections of sewer not passing the mandrel test shall be uncovered and the Contractor, at no additional cost to the City, shall repair or replace the sewer to the satisfaction of the Engineer. These repaired segments shall be re-tested by the Contractor.
D. Following a successful thirty day mandrel test, all sewer mains shall be Laser Profiled, see SECTION 02687.

3.06 MANHOLE TESTING

A. All new manholes and fully rehabilitated manholes with pipe end seals installed shall be tested for infiltration/exfiltration by vacuum testing. All vacuum testing shall be performed in the presence of the City/Design Professional. Notification by the Contractor to the City/Design Professional shall be made 5 days in advance of testing. All visible defects and leaks shall be repaired by the Contractor prior to testing and then again during the warranty period.

B. Vacuum testing is required on all new manholes and fully rehabilitated manholes with a main line diameter of less than 42 inches.

C. Prior to payment for new manholes and fully rehabilitated manholes rehabilitation, the manholes shall pass the vacuum test as identified in this specification.

D. The initial vacuum test on new manholes or structure shall be conducted prior to backfilling. Vacuum testing after backfilling should be performed only after a successful non-backfill test has been completed. The Contractor shall not vacuum test backfilled manholes in the presence of ground water. All pipes entering the manhole shall be plugged at least eight (8) inches into the sewer pipe. The plug must be inflated at a location beyond the manhole/pipe gasket.

(1) All plugs shall be adequately braced to prevent the plug or pipe from being dislodged and drawn into the manhole.

(2) A vacuum of at least 10-1/2 inches of mercury shall be drawn on the manhole. The valve on the vacuum line to the manhole shall be shut and the vacuum line disconnected. The vacuum line valve shall be opened and the vacuum adjusted to 10 inches of mercury.

(3) The pressure gauge shall be liquid filled having a 3.5 inch diameter face with a reading from zero to 30 inches of mercury. The test equipment shall be capable of having two gauges connected. The gauge supplied with the test equipment shall match the reading of a gauge furnished by the City/Design Professional.

(4) The time for the vacuum reading to drop from 10 inches of mercury to 9 inches of mercury shall not be less than the following values for the manhole to be considered as passing the vacuum test:

Manhole Depth	Time in Minutes
10 feet or less	2
10.1 to 15 feet	2.5
15.1 to 25 feet	3

(5) If a manhole fails the vacuum test, the manhole shall be repaired with a City approved product and re-tested. This procedure shall be continued until all defects have been repaired and the manhole successfully passes the vacuum test.

3.07 WARRANTY

A. The Contractor shall warranty all work during the Performance and Maintenance period. All defects including infiltration/exfiltration found during the warranty period shall be corrected immediately at no additional cost to the City.

END OF SECTION

SECTION 02930 - SEEDING

PART 1 - GENERAL

1.01 SUMMARY

A. This section covers the operations necessary to produce grass covered areas for restoration and erosion control. The Contractor shall provide all materials, labor and equipment to complete the seeding work in accordance with this section. All costs pertaining to supply, delivery, storage, site preparation, seeding, fertilization, mulching, watering, protection, seeding repair and maintenance during the establishment period shall be included in the lump sum bid.

B. The Contractor shall sod all yards and green spaces unless the owner of the property gives written permission to seed instead of sod. Written permissions shall be made part of the project documentation included at the end of the project.

1.02 DESCRIPTION

A. All areas disturbed by construction operations shall be seeded unless otherwise specified in the contract documents to be sodded. For areas requiring sod, see Section 02931 – Sodding. Seeded areas include, but is not limited to, areas of cut and fill, trenching, temporary roads, staging areas, storage areas and site specific green spaces. The sequence of work for seeding shall be cleaning the area, adding topsoil, application of fertilizer, tilling and removing rocks, seeding, covering, firming and the application of mulch. All seeded areas shall be mulched with straw or wood cellulose fiber and watered until grass has been established.

1.03 SPECIFICATION MODIFICATIONS

A. It is understood that throughout this section, these Specifications may be modified by appropriate items in Section 01015 – Specific Project Requirements or as otherwise indicated on the Contract Drawings.

1.04 RELATED SECTIONS

A. Section 01000 – General Project Requirements.
B. Section 01015 – Specific Project Requirements.
C. Section 01300 – Submittals.
D. Section 02200 – Earthwork.
E. Section 02575 – Surface Restoration.
F. Section 02931 – Sodding.

1.05 QUALITY ASSURANCE

A. The Contractor is responsible for the quality assurance and quality control of the Work. The Work shall be performed by a contractor with a proven record of performance for similar restoration and erosion control work.

1.06 INFORMATION PROVIDED BY THE CITY

A. As provided in the Contract Documents.

1.07 CONTRACTOR SUBMITTALS

A. The Contractor shall submit to the City/Design Professional for review and approval, in accordance with Section 01300 – Submittals, all specifications and data covering the proposed materials to be used for seeding operations.

B. Prior to commencing seeding operations, the Contractor shall submit the following to the City/Design Professional for review and approval:

1. Invoices and Analysis Labels. A copy of the supplier's invoices for all seed, mulch and fertilizer which shows the quantity by weight purchased for the project. The label bearing the manufacturer's guaranteed statement of analysis to ensure compliance with the specified requirements for quality and application rates.
2. Turf grass seed certification:
    a. Certify that each lot of seed has been tested by a testing laboratory certified in seed testing, within 6 months of the date of delivery. Include with the certification:
        1. Name and address of laboratory.
        2. Date of test.
        3. Lot number for each seed specified.
        4. Test Results:
            a. Name.
            b. Percentages of purity and of germination.
            c. Weed content and identity for each kind of seed furnished.
3. Mixtures: include proportions of each kind of seed.
4. Certification of sprig type and name.
5. Description of required maintenance activities and activity frequency.

1.08 PRODUCT DELIVERY, STORAGE AND HANDLING

A. Delivery of materials shall be in manufacturer's original unopened and undamaged packages. They shall be clearly marked to identify brand name, contents and order number on each package. Packages showing indication of damage that may affect the condition of contents are not acceptable.

B. Materials shall be stored in accordance with manufacturer's recommendations. Storage shall provide protective cover from moisture and damage. Materials shall be maintained at the temperature in accordance with manufacturer's recommendation.

PART 2 - PRODUCTS

2.1 MATERIALS

A. Top soil: The top soil shall be of a quality at least equal to that which exists in areas adjacent to the area to be repaired. Top soil shall be free from weed seeds, tree roots, clumps of clay, stones and other objectionable materials that hinder grading, planting and maintenance operations. See Section 02200 – Earthwork for additional requirements on topsoil.

B. Mulch: Mulch for application to seed bed areas shall be cereal grain straw or wood cellulose fiber.
   1. Straw mulch shall be baled, dry and show no signs of discoloration and mold damage.
      a. A minimum of 50 percent of weight of the herbage making up the material shall be 10 inches in length or longer.
      b. Mulch material containing weed seeds and crop seeds is not acceptable.
   2. Wood cellulose fiber shall be prepared from virgin wood fibers containing no substance or factor which might inhibit germination or growth of grass seed.
      a. The fiber shall be dyed an appropriate color to allow visual metering of its application and shall contain a tacking agent either combined with the product or added in the tank when making the slurry.
      b. Fibers shall have the property of becoming evenly dispersed and suspended when agitated in water.
      c. When sprayed uniformly on the surface of the soil, the fibers shall form a blotter-like groundcover which readily absorbs water and allows infiltration to the underlying soil.
      d. Weight specifications from suppliers for all applications, shall refer only to air dry weight of the fiber, at a standard equivalent of 10 percent nominal moisture content.
      e. The mulch material shall be supplied in packages having a gross weight not in excess of 100 pounds and shall be marked by the manufacturer to show the air dry weight content.
      f. Suppliers shall certify that laboratory and field testing of their product has been accomplished and that it meets all of the foregoing requirements pertaining to wood cellulose fiber mulch.
   3. Exception: Vegetative Type mulch will be the only acceptable type mulch used in areas where Type "C" seed is required, Type "C" seed is specified in paragraph 2.1.E.3 in this Section.

C. Starter Fertilizer: Fertilizer shall be pelleted or granulated and shall be an approved brand composed of a "Slow Release Nitrogen" fertilizer in the 1-2-1 range, such as 13-25-12 grade, uniform in composition free flowing and suitable for application with approved equipment, delivered to the site in convenient containers, each fully labeled, conforming to the applicable state fertilizer laws, bearing the name, trade mark, or trade name and a warranty of the producer.

D. Seed: Seed shall be labeled in accordance with U.S. Department of Agriculture Rules and Regulations under the Federal Seed Act and Stated seed laws. Seed shall be furnished in sealed standard containers of the vendor. Each seed container shall bear the name, trade name, or trade mark, warranty of the producer and a certificate of the percentage of the purity and germination of each kind of seed specified. Seed which has become wet, moldy or otherwise damaged in transit or in storage will not be acceptable.
   1. Seed shall have a guaranteed germination rate of 95% or greater.

2. Pure Live Seed (PLS) formula: The following formula shall be used to determine PLS for each kind of seed:

PLS (%) = [Purity (percent) x Germination (percent)]/100

E. The areas and types of seeding to be used shall be specified on the plans. The types of acceptable seed, depending upon the area, is as follows:

1. Type "A" Seed: This seeding mixture will normally be used when seeding is required in areas of established yards, shoulders, slopes in street right-of-way and any other area where a high-type seeding is deemed necessary. The seed shall be sowed at a rate of 10 lbs. PLS per 1000 square feet (436 lbs. PLS per acre). The seed mixture will be 100 percent Turf-Type Tall Fescue composed of an equal mix of three of four compatible species. The mixture shall not include any varieties of the slower growing Turf-Type Tall Fescue "Dwarf". The species shall be one of the following or as approved by the City/Design Professional:

Apache	Arid	Austin
Bonanza	Carefree	Chieftan
Cimmaron	Cochise	Falcon
Guardian	Houndog	Jaguar II
Maverick II	Mustang	Olympic
Phoenix	Rebel II	Rebel 3D
Safari	Shenandoah	Thoroughbred
Titan	Tribute	Vegas

a. The seed mixture shall also include 100 percent Annual Rye grass to provide a temporary grass stand. The seed shall be sowed at a rate of 10 lbs. PLS per 1000 square feet (436 lbs. per acre) of the Turf-Type Tall Fescue and 2 lbs. PLS per 1000 square feet (87 lbs. per acre) of the Annual Rye.

2. Type "B" Seed: This seeding mixture will be used to seed areas outside of street right-of-ways that are not maintained.

Type "B" Seed	**Minimum Pure Live Seed (PLS%)**	**Rate of Pure Live Seed (lbs. per acre)**
Alta Fescue or Kentucky 31 Fescue (Festuca Elatior Var. Arundinces)	75	90
Rye grass (Lolium Perenne or L. Multiflorum)	80	50
TOTAL		**140**

3. Type “C” Seed: This seeding mixture will normally be used in public parks, wild life refuges and other areas where this seeding mixture is deemed necessary. The types of seeding mixtures for different habitats will be as follows:

Planting Habitat	Scientific Name	Common Name	Initial or Permanent Cover	Coverage
Wet Woodland	Elymus virginicus L.	Virginia Wild Rye	P	3 lbs./ac PLS
	Cinna arundinacea L.	Woodreed	P	100 lbs./ac PLS
	Sporobolis heterolepis A. Gray	Prairie Dropseed	I,P	3 lbs./ac PLS
	Elymus canadensis L.	Canada Wild Rye	P	3 lbs./ac PLS
	Festuca octoflora	Six-weeks Fescue	I	0.5 lbs./ac PLS
	Triticum aestivum L.	Winter Wheat	I	60 lbs./ac PLS
Planting Habitat	Scientific Name	Common Name	Initial or Permanent Cover	Coverage
Dry Woodland	Elymus canadensis L.	Canada Wild Rye	P	3 lbs./ac PLS
	Elymus virginicius L.	Virginia Wild Rye	P	3 lbs./ac PLS
	Sporobolis heterolepis A. Gray	Prairie Dropseed	I,P	3 lbs./ac PLS
	Triticum aestivum L.	Winter Wheat	I	60 lbs./ac PLS
Planting Habitat	Scientific Name	Common Name	Initial or Permanent Cover	Coverage
Wet Open	Elymus canadensis L.	Canada Wild Rye	P	3 lbs./ac PLS
	Echinochloa muricata Fern.	Rough Barnyard grass	I,P	2 lbs./ac PLS
	Spartina pectinata	Prairie Cordgrass	P	200 rhiz./ac
	Leersia oryzoides	Rice Cutgrass	P	200 rhiz./ac
	Triticum aestivum L.	Winter Wheat	I	60 lbs./ac PLS

F. Herbicide: Pre-emergent herbicide shall be siduron (Tupersan).
G. Water: Water used for this work shall be furnished by the Contractor.

PART 3 - EXECUTION

3.1 SAFETY

A. Perform all work in accordance with applicable Occupational Safety and Health Administration (OSHA) standards.

3.2 INSTALLATION

A. Time and Conditions: The seeding work shall not be started until all earthwork has been completed in accordance with Section 02200 – Earthwork. Backfills and fills shall be allowed to settle and the topsoil spread and finish-grading completed before seeding work is started.
B. Personnel and equipment: All seeding work shall be performed by a contractor having demonstrated experience in seeding on projects of similar size. The work shall be performed by experienced personnel who are familiar with project requirements and are under the supervision of a qualified foreman at all times when the work is in progress.
C. Equipment: The Contractor shall have access to equipment such as a fertilizer spreader, farm tractor with tilling equipment, grass seed drill or cultipacker type seeder, mulch blower, hydro-mulcher and straight serrated disk for crimping mulch into the soil.
D. Clearing: Prior to grading and tilling, vegetation that may interfere with operations shall be mowed, grubbed and raked. The collected material shall be removed from the site. The surface shall be cleared of stumps, stones larger than 1 inch, roots, cable, wire, trash and other materials that might hinder the work or subsequent maintenance.
E. Grading. Established grades, as indicated on the Drawings, shall be maintained in a true and even condition. Eroded areas and areas having inadequate drainage, as indicated by ponding of water, shall be filled. Ruts, deep tracks, dead furrows and ridges shall be eliminated.
F. Application of Fertilizer: Fertilizer as specified shall be applied within 24 hours prior to the tilling operation. The fertilizer shall be distributed over the entire area to be seeded at the rate of 200 pounds per acre and incorporated into the soil to a depth of at least 4 inches by disking or harrowing methods. Fertilizing rate is equivalent to 2.3 pounds per 500 square feet.
G. Preparation of Seed Bed: After fertilizer has been applied, the areas to be seeded shall be tilled to a depth of at least 4 inches by disking, plowing, harrowing, or other accepted methods until the soil is well pulverized and smoothed with a weighted spike-tooth harrow, railroad chains, or bridge timber float drag. When a chisel plow is used, the chisels shall be set not more than 10 inches apart and the areas shall be cross or double-tilled. All areas shall be left smooth for ease of mowing. All operations shall be done in a direction parallel to the contour lines on the slope and not uphill or downhill. Areas tilled shall be maintained until seeding and mulching is complete to insure a smooth area with no gullies or depressions.
H. Application of Seed: Seeding equipment calibration tests shall be made in the presence of the City/Design Professional to determine the equipment setting required to apply the seed at the specified rates. Markers shall be used to ensure that no skips occur between successive passes of the seeder. If unplanted skips and areas are noted after germination and the growth of the grass, the unplanted areas shall be seeded at no additional cost to the Owner. The seed

box shall be kept at least half full during seeding operations to ensure even distribution of seed over all the areas seeded.

I. Hydro-seeding:
   1. Seed and fertilizer, mixed in proportions as herein specified, can be broadcast in a hydro-mulch with water which forms an emulsion covering the prepared designated areas in a uniform manner.
   2. Areas to be hydro-seeded shall be fertilized at rates specified earlier. The seed-bed shall be free of any irregularities in the surface resulting from being fertilized, or other operations, and shall be corrected to prevent formation of water pockets.
   3. Hydro-mulch used shall be a wood fiber mulch with a tackifier, such as Conwit 2000, or approved equivalent. Hydro-mulch shall be applied at a rate of 1500 lbs. per acre.
   4. Hydro-seeder filling tank should be ½ full of water before adding seed, fertilizer and hydro-mulch components. Begin agitation while adding remaining water so that a uniform mixture is obtained. Seed, fertilizer and hydro-mulch components shall not be added to water more than four (4) hours prior to application.
   5. Discharge hydro-mulch slurry mix on prepared soil for uniform distribution.

J. All seeding work shall be done between the dates of February 1 and April 15 for spring planting or August 15 and October 15 for fall planting.

I. Sowing shall be accomplished by use of an approved mechanical seeder or drill (hand spreader can be used in small areas), making sure that successive seed strips overlap to provide uniform coverage.

J. The mixtures shall be applied in a crossing pattern of two passes, each applying half of the seed required.

K. Seed should be drilled to a depth of 1/2 inch.

L. Sprigs (rhizomes) shall be broadcast evenly and uniformly on the soil surface.

M. Compaction: Immediately following the completion of seeding operations, the entire area shall be compacted by means of a roller weighing at least 60 but not more than 90 pounds per linear foot of roller or any other method approved by the City/Design Professional.

N. Application of Herbicide: Following completion of seeding operations, pre-emergent herbicide as specified shall be applied to all seeded areas at the rate of 6 pounds active ingredient per acre.

O. Mulching: Mulching shall be done within 24 hours following the seeding operation except in the case of wood cellulose type mulch.

P. Vegetative Type Mulch:
   1. Straw mulch shall be spread uniformly in a continuous blanket at a depth of not less than 1-1/2 inches and not more than 2 inches loose measurement (approximately 1-1/2 to 2 tons per acre).
   2. Mulch shall be spread by hand or by a blower type mulch spreader.
   3. Blower type mulch spreaders shall be adjusted and operated in such a manner as to prevent excessive breakage of the mulch material. If this cannot be accomplished, the mulch shall be spread by hand.
   4. Care shall be exercised to ensure that all wire from baled hay is collected as it is removed from the bale.

5. Mulching shall be started at the windward side of relatively flat areas, or at the upper part of a steep slope and continued uniformly until the area is covered.
6. The mulch shall not be bunched.
7. No mulch shall be spread unless it can be anchored on the same day.

Q. Anchoring Straw Mulch:
1. The straw mulch shall be anchored in the soil to a depth of 2 to 3 inches be a notched disk set straight or a mulch crimping machine.
2. The machine shall be weighted and operated in such a manner to secure the mulch firmly in the ground to form a soil binding mulch and prevent loss or bunching of the hay by wind.
3. Two or more passes may be required to anchor the mulch to the satisfaction of the City/Design Professional.

R. Application of Wood Cellulose Fiber:
1. Wood cellulose fiber mulch shall be applied with a hydro-mulcher at not less than 1000 pounds per acre.
2. Precautionary measures shall be taken in preventing overspray on structures, paving and plantings.

S. Watering: Promptly after seeding and mulching, wet the seed bed thoroughly. Watering shall continue so as to keep all areas moist throughout the germination period.

T. Cleanup operations within forty-eight (48) hours after completion of the construction operations:
1. The entire area shall be cleared of excess soil and waste material, including, but not limited to, stones, stumps, roots, brush, wire, grade stakes, trash and all objects that might be a hindrance to maintenance operations or affect the visual appearance of the site.
2. All roads, over which hauling operations have been conducted, regardless of the type of surfacing, shall be clean and all debris left on the surface shall be removed.
3. The wheels of vehicles shall be cleaned to avoid leaving soil upon roads, walks and other surfaced areas.

U. Water Usage:
1. All watering equipment required for the work shall be furnished by the Contractor.
2. All water obtained from fire hydrants shall be metered. See Section 01000 – General Project Requirements.

3.3 MAINTENANCE, PROTECTION AND REPAIR

A. Maintenance of Area: The Contractor is responsible for maintaining all seeded areas until acceptance by the City/Design Professional. Maintenance of the seeded areas shall include the following:
1. Established yards, shoulders, slopes in street right-of-way and all other areas where a high-type seeding is deemed necessary. All newly seeded grassed areas shall be kept in a healthy growing condition by watering, weeding, mowing, trimming, edging, etc., until completion and acceptance by the City/Design Professional. The seeded areas shall be mowed with approved mowing equipment to a height of 3 inches whenever the average height of vegetation becomes 6 inches.

2. Turf grass of one-square foot or more that does not show definite growth and establishment shall be re-seeded by the Contractor at no additional cost to the Owner. The Contractor shall continue the care and maintenance of all seeded areas as specified above until all work of this project has been satisfactorily completed and all deficiencies have been corrected at which time final inspection shall be made.
3. Areas off of street right-of-way: All seeded areas shall be maintained until acceptance by the City/Design Professional. Maintenance shall include repair of erosion damage, re-seeding, mulching and watering.

B. Protection and Repair:
1. The seeded area shall be kept free of traffic until accepted.
2. If at any time before acceptance of the completed contract, any portion of the seeded surface becomes gullied, damaged - intentionally or otherwise, or the seeding has been damaged or destroyed, the affected portion shall be repaired to re-establish the specified condition prior to the acceptance of the work.

3.4 WARRANTY

A. Seeding shall have germinated, taken root and have established satisfactory coverage before acceptance by the City/Design Professional. The Contractor shall maintain as described in paragraph 3.3 and shall guarantee seeding for one (1) year after acceptance. The Contractor shall scarify, reseed, fertilize and mulch any barren area greater than 1 square foot. See Section 02575 – Surface Restoration for requirements on early acceptance.

END OF SECTION

SECTION 02931 - SODDING

PART 1 - GENERAL

1.01 SUMMARY

A. This section covers the operations necessary to produce grass covered areas for restoration and erosion control. The Contractor shall provide all materials, labor and equipment to complete the sodding work in accordance with this section. All costs pertaining to supply, delivery, storage, site preparation, sodding, fertilization, watering, protection, sodding repair and maintenance during the establishment period shall be included in the lump sum bid.

B. The Contractor shall sod all yards and green spaces unless the owner of the property gives written permission to seed instead of sod. Written permissions shall be made part of the project documentation included at the end of the project.

1.02 DESCRIPTION

A. All areas disturbed by construction operations shall be sodded unless otherwise specified in the contract documents to be seeded. For areas requiring seed, see Section 02930 – Seeding. Sodded areas include, but are not limited to, areas of cut and fill, trenching, temporary roads, staging areas, storage areas and site specific green spaces. The sequence of work for sodding shall be cleaning the area, adding topsoil, application of fertilizer, tilling and removing rocks, sodding, covering, firming, watering and maintenance.

1.03 SPECIFICATION MODIFICATIONS

A. It is understood that throughout this section, these Specifications may be modified by appropriate items in Section 01015 – Specific Project Requirements or as otherwise indicated on the Contract Drawings.

1.04 RELATED SECTIONS

A. Section 01000 – General Project Requirements.
B. Section 01015 – Specific Project Requirements.
C. Section 01300 – Submittals.
D. Section 02200 – Earthwork.
E. Section 02575 – Surface Restoration.
F. Section 02930 – Seeding.

1.05 QUALITY ASSURANCE

A. The Contractor is responsible for the quality assurance and quality control of the Work. The sodding work shall be performed by a qualified contractor with a proven record of performance for similar restoration and erosion control work.

1.06 INFORMATION PROVIDED BY THE CITY

A. As provided in the Contract Documents.

1.07 CONTRACTOR SUBMITTALS

A. The Contractor shall submit to the City/Design Professional for review and approval, in accordance with Section 01300 – Submittals, all specifications and data covering the proposed materials to be used for sodding operations.

B. Prior to commencing sodding operations, the Contractor shall submit the following to the City/Design Professional for review and approval:

1. Invoices and Analysis Labels: A copy of the supplier's invoices for all sod and fertilizer which shows the quantity by weight purchased for the project and a representative label bearing the manufacturer's or vendor's guaranteed statement of analysis to assure compliance with specified requirements for quality and application rates.
2. Sod: Certification of seed analysis, germination rate and inoculation:
    a. Certify that each lot of seed used for sod has been tested by a testing laboratory certified in sod testing, within 6 months of date of delivery. Include with the certification:
        1. Name and address of laboratory.
        2. Date of test.
        3. Lot number for each seed specified.
        4. Test Results:
            a. Name.
            b. Percentages of purity and of germination.
            c. Weed content for each kind of sod furnished.
    b. Certification of sod: include source, harvest date of sod and type of sod.
    c. Certification of sprig type and name.
    d. Description of required maintenance activities and activity frequency.

1.08 PRODUCT DELIVERY, STORAGE AND HANDLING

A. Delivery of materials shall be in manufacturer's original unopened and undamaged packages. Packaged items shall be clearly marked to identify brand name, contents and order number on each package. Packages showing indication of damage that may affect condition of contents are not acceptable. Sod shall be supplied in rolls of uniform thickness and kept covered and moist.

B. Storage of material shall provide protective cover from damage and stored at temperatures and moisture conditions in accordance with manufacturer's and supplier recommendations. Materials shall be stacked or stored in accordance with manufacturer's and supplier recommendations.

C. Harvesting Sod:

1. Do not harvest if sod is excessively dry or wet.
2. Harvest and deliver sod only after laying bed is prepared for sodding.
3. Roll or stack to prevent yellowing.
4. Deliver and lay all sod within 24 hours of harvesting.
5. Keep moist and covered from time of harvesting until laid.

PART 2 - PRODUCTS

2.1 MATERIALS

A. Top soil: The top soil shall be of a quality at least equal to that which exists in areas adjacent to the area to be repaired. Top soil shall be free from weed seeds, tree roots, clumps of clay, stones and other objectionable materials that hinder grading, planting and maintenance operations. See Section 02200 – Earthwork for additional requirements on topsoil.

B. Sod:

1. The sod to be used as source material shall be a thick stand of Kentucky Blue grass, Turf Type Tall Fescue, Bermuda grass, Zoysia grass or other grasses as shown on the plans. For established yards, the sod shall match the species removed.
2. The sod shall contain a growth of not more than 1 percent of other grasses and clovers shall be free from all prohibited and noxious weeds.
3. The Turf Type Tall Fescue sod shall be composed of an equal mix of three or four compatible species of 100 percent Turf Type Tall Fescue. The mixture shall not include any varieties of the slower growing Turf Type Tall Fescue "Dwarf". The species shall be one of the following:

Apache	Arid	Austin
Bonanza	Carefree	Chieftan
Cimmaron	Cochise	Falcon
Guardian	Houndog	Jaguar II
Maverick II	Mustang	Olympic
Phoenix	Rebel II	Rebel 3D
Safari	Shenandoah	Thoroughbred
Titan	Tribute	Vegas

4. Kentucky Blue grass and Turf Type Tall Fescue sod shall be cut in strips of uniform thickness, the range of acceptable thickness shall be 1 1/2 to 2 inches; each strip containing at least one square yard. Sod shall be cut in strips not less than 12 inches wide.
5. Bermuda grass or Zoysia grass sods shall be cut into strips of uniform thickness, the range of acceptable thickness shall be 1 1/2 to 2 inches; each strip shall not be less than 12 inches wide and 24 inches long. Strips that crumble will not be acceptable.
6. Broken pads and torn or uneven ends will not be acceptable. Standard size sections shall be strong enough to support their own weight and should retain their size and shape when suspended vertically from a firm grasp on the upper 10 percent of the section. Sod shall not be harvested or transplanted with moisture content (excessively dry or wet) that will adversely affect its survival.
7. Sod shall be relatively free of thatch, up to 1/2 inch allowable (uncompressed). Sod shall be reasonably free of diseases, nematodes and soil-borne insects. State nursery and/or plant materials laws require that all sod entering inter-state commerce be inspected and approved for sale. The same applies to sod being shipped intra-state. The inspections and approval must be made by the state agricultural department, office of the state entomologist.

C. Fertilizer shall be inorganic 12.12.12 or 13.13.13 grade, uniform in composition, free flowing and suitable for application with approved equipment, delivered to the site in convenient containers, each fully labeled, conforming to applicable state fertilizer laws, bearing the name, trade name, or trade mark and warranty of the producer.

PART 3 - EXECUTION

3.1 SAFETY

A. Perform all work in accordance with applicable Occupational Safety and Health Administration (OSHA) standards.

3.2 PREPARATION

A. All sodding work shall be performed by a contractor having demonstrated experience in sodding on projects of similar size. The work shall be prepared by experienced personnel who are familiar with the required work and who are under the supervision of a qualified foreman at all times when the work is in progress.

B. Preparation of areas to be sodded shall include filling, reshaping or eroded areas, cleaning ditches and refinishing slopes to the established grade section. The area shall be cleared of stumps, stones larger than 1 inch, roots, cable, wire, trash and other materials that might hinder the work or subsequent maintenance.

C. Application of Fertilizer: Before tilling operations, fertilizer shall be spread uniformly at the rate of 300 pounds per acre. Fertilizing rate is equivalent to 3.5 pounds per 500 square feet.

D. Preparation of Sod Bed:

1. After fertilizer has been applied, the areas to be sodded shall be tilled to a depth of at least 2 inches by disking, plowing, harrowing, or other accepted methods until the soil is well pulverized and smoothed with a weighted spiketooth harrow, railroad chains, or bridge timber float drag. When a chisel plow is used, the chisels shall be set not more than 10 inches apart and the areas shall be cross or double-tilled. All areas shall be left smooth for ease of mowing. All operations shall be done in a direction parallel to the contour lines on the slope and not uphill or downhill.
2. Grade areas to smooth, even surface with loose, uniformly fine texture.
    a. Roll and rake, remove ridges, fill depressions to meet finish grades.
    b. Limit such Work to areas to be planted within immediate future.
    c. Remove debris, stones larger than 1 inch diameter and other objects that may interfere with planting and maintenance operations.

3.3 INSTALLATION

A. Time and Conditions. The sodding work shall not be started until all earthwork has been substantially completed. Backfills and fills shall be allowed to settle and the topsoil spread and finish-grading completed before the work is started. Failure to account for settlement prior to placement of topsoil and sod may result in rework of the area.

B. Application of Sod: Kentucky Blue grass and Turf Type Fescue sod shall not be placed during a drought or during the period from June 1 to September 1, unless authorized by the

City/Design Professional and shall not be placed on frozen ground. Bermuda and Zoysia sods shall only be placed during the period from May 1 to October 15. The City/Design Professional reserves the right to delay the sodding of all types of sod or to vary the permissible sodding seasons, due to weather, soil conditions, or for other causes.

C. Sod Placement: Sod shall be moist when it is placed. Sod strips shall be laid along contour lines, commencing at the lowest point of the area and working upward. The transverse joints of sod strips shall be staggered and the sod carefully placed to produce tight joints. If necessary to walk excessively on newly laid sod, walking boards should be laid for this purpose. The sod shall be firm and watered immediately after it is placed. The "firming" shall be accomplished by application of a roller weighing not less than 60 nor more than 90 pounds per linear foot of roller or other approved method.

D. Anchoring Sod: On slopes 2:1 or steeper, the sod shall be anchored using garden staples.

E. Watering: Promptly after sodding, wet the sod thoroughly. Watering shall continue so as to keep all areas moist until acceptance by the City/Design Professional.

F. Water Usage:
   1. All watering equipment required for the work shall be furnished by the Contractor.
   2. All water obtained from fire hydrants shall be metered. See Section 01000 – General Project Requirements.

G. Cleanup Operations within forty-eight (48) hours after completion of the construction operations:
   1. The entire area shall be cleared of excess soil and waste material, including, but not limited to, stones, stumps, roots, brush, wire, grade stakes, trash and all objects that might be a hindrance to maintenance operations or affect the visual appearance of the site.
   2. All roads, over which hauling operations have been conducted, regardless of the type of surfacing, shall be clean and all debris left on the surface shall be removed.
   3. The wheels of vehicles shall be cleaned to avoid leaving soil upon roads, walks and other surfaced areas.

3.4 MAINTENANCE, PROTECTION AND REPAIR

A. Maintenance of Area. The Contractor shall be responsible for maintaining all sodded areas until acceptance by the City/Design Professional. Maintenance of the sodded areas shall include the following:
   1. All newly sodded grassed areas shall be kept in a healthy growing condition by watering, weeding, mowing, trimming, edging, etc., until completion and acceptance by the City/Design Professional. The sodded areas shall be mowed with approved mowing equipment to a height of 3 inches whenever the average height of vegetation becomes 6 inches.
   2. Turf grass of one-square foot or more that does not show definite growth and establishment shall be re-sodded by the Contractor at no additional cost to the Owner. The Contractor shall continue the care and maintenance of all sodded areas as specified above until all work of this project has been satisfactorily completed and all deficiencies have been corrected at which time final inspection shall be made.

B. Protection and Repair:
   1. The sodded area shall be kept free of traffic until accepted.

2. If at any time before acceptance of the completed contract, any portion of the seeded surface becomes gullied, damaged - intentionally or otherwise, or the seeding has been damaged or destroyed, the affected portion shall be repaired to re-establish the specified condition prior to the acceptance of the work.

3.5 WARRANTY

A. Sodding shall have taken root and have established satisfactory coverage before acceptance by the City/Design Professional. The Contractor shall maintain as described in paragraph 3.4 and shall guarantee sodding for one (1) year after acceptance. The Contractor shall scarify, re-sod, fertilize and water any dead or barren area greater than 1 square foot. See Section 02575 – Surface Restoration for requirements on early acceptance.

END OF SECTION

SECTION 03000 - MISCELLANEOUS CONCRETE

PART 1 - GENERAL

1.1 SCOPE

A. The Contractor shall perform all concrete work as required to complete the work specified in the contract documents.

B. This section covers miscellaneous concrete work associated with the construction of water, wastewater and stormwater infrastructure. This section does not apply to concrete work associated with surface restoration. See Section 02575 – Surface Restoration for concrete requirements associated with curb, gutter, sidewalk and street work.

1.2 RELATED SECTIONS

A. Section 03370 – Sanitary Sewer Manhole Construction.

B. Section 03608 – Concrete Vaults.

1.3 CODES AND STANDARDS

A. The publications listed below form a part of this specification to the extent referenced. The publications are referred to within the text by the basic designation only.

B. American Society for Testing and Materials (ASTM):

ASTM A615	Deformed and Plain Billet Steel Bars for Concrete Reinforcement.
ASTM C31	Test Methods of Making and Curing Concrete Test Specimens in the Field.
ASTM C33	Concrete Aggregates.
ASTM C39	Test Method for Compressive Strength of Cylindrical Concrete Specimens.
ASTM C94	Ready-Mixed Concrete.
ASTM C143	Standard Test Method for Slump of Hydraulic-Cement Concrete.
ASTM C150	Portland Cement.

C. American Concrete Institute (ACI):

ACI 304	Recommended Practice for Measuring, Mixing, Transporting and Placing Concrete.
ACI 305	Committee Report on Hot-Weather Concreting.
ACI 306	Committee Report on Cold-Weather Concreting.
ACI 309	Recommended Practice for Consolidation of Concrete.
ACI 318	Building Code Requirements for Reinforced Concrete.
ACI 347	Recommended Practice for Concrete Formwork.

1.4 SUBMITTALS

A. Contractor shall submit product data for review on the following items required by this Division:

1. Laboratory name.
2. Aggregate testing and gradation.
3. Design mix.

B. Product data shall be submitted in accordance with Section 01300 – Submittals.

PART 2 - PRODUCTS

2.1 CEMENT

A. Cement shall conform to ASTM C150, Type I, unless high early strength is required in which instance Type III shall be used. Cement may be bagged or bulk.

2.2 FINE AGGREGATE

A. Fine aggregate, clean natural sand, shall conform to ASTM C33 and have the following gradation:

Sieve	% Passing	% Retained
3/8"	100	0
#4	95-100	0-5
#8	80-100	0-20
#16	50-85	15-50
#30	25-60	40-75
#50	10-30	70-90
#100	2-10	90-98

2.3 COARSE AGGREGATE

A. Clean crushed rock, washed gravel, or other inert granular material, except that clay and shale particles shall not exceed one percent. Coarse aggregate shall conform to ASTM C33 and have the following gradation:

Sq. Sieve	% Passing	% Retained
3/4"	90-100	0-10
3/8"	20-55	45-80
#4	0-10	90-100
#8	0-5	95-100

2.4 WATER

A. Potable water from a municipal or other public water supply district shall be used for mixing and curing.

2.5 REINFORCING STEEL

A. Reinforcing Steel:
   1. Reinforcing steel bars shall conform to the requirements of the following Standards and Grades:
      (a) ASTM A615: Grade 40 or 60.
      (b) ASTM A616: Grade 50 or 60.

B. Bending details shall conform to ACI 318.

2.6 FORMS AND FORMWORK ACCESSORIES

A. Forms:
   1. Suitable and substantial forms shall be provided. All forms shall be constructed and maintained plumb and true to line, securely braced, tied, clamped and shored in order to prevent leakage of concrete and prevent deflection or displacement of forms during

placement of concrete. All exposed corners and edges shall have 1" fillets. All joints shall be mortar tight; open joints shall be sealed as required.

2. Where applicable, undisturbed earth may be used in lieu of forms.
3. The deflection of the forms due to the weight and rate of placing concrete, placing equipment, and workmen shall be accurately figured and taken into account in the design of the forms so that finished concrete members will have surfaces, lines, planes, and elevations required within tolerances in accordance with ACI 117.
4. All forms shall be removed prior to backfill unless the following conditions are met:
   (a) As directed by the City.
   (b) When constructed of unbraced plywood having a thickness of ½-inch or less, removal shall be optional unless otherwise directed by the City.
5. Forms shall be constructed so that they can be removed without damage to the concrete.

B. Formwork accessories:
1. Forms shall be securely braced and tied with approved form ties that do not leave any parts within 3/4 inch of the surface of the concrete. Wire ties and wood spreaders will not be permitted.

2.7 CONCRETE MIX

A. Concrete:
1. Concrete shall conform to KCMO PW 2208 except as follows:
   (a) Limestone may be used as coarse aggregate.
   (b) Design strength of concrete shall be 4,500 psi or greater at 28 days.
   (c) Maximum slump shall be 4 inches. Determination of slump shall conform to ASTM C143.
   (d) Coarse Aggregate: 1-inch maximum.
   (e) Air entrainment admixture is required to provide 4 to 6 percent entrained air when placed, in conformance with ASTM C185.
   (f) Water reducing admixture is required.
2. Ready mix concrete shall be supplied by a plant approved by the KCMO Public Works Department according to the Ready Mix Concrete Quality Management Plan. Submit ready mix concrete plant information in accordance with paragraph SUBMITTALS.
3. Submit concrete mix design in accordance with KCMO PW 2208.C and in accordance with the paragraph SUBMITTALS.

B. Concrete shall be delivered to the site in conformance with ASTM C94.

PART 3 - EXECUTION

3.1 REINFORCING STEEL AND CONCRETE

A. Placing of Reinforcing Steel:
1. Before being installed in the final position, all metal reinforcements shall be free of mud, clay, ice, grease, oil, loose rust and scale, and other coatings that would reduce or destroy the bond.
2. Metal reinforcements shall be accurately formed and positioned to the required dimensions. All bars are to be accurately placed and securely tied at all intersections.
   All reinforcing steel shall be placed so it is covered with a minimum of 3″ of concrete.
3. Steel reinforcements shall be accurately positioned as required and shall be secured against displacement by using annealed wire ties or suitable clips at all intersections.
4. The steel reinforcements shall be supported by metal supports, spacers, or hangers.
5. The legs on the metal chair supports shall be plastic coated.

B. Forms:
   1. Verify lines, levels and centers before proceeding with formwork.
   2. A coat of non-staining oil, lacquer, or other approved material shall be applied to protect form surface and to facilitate stripping. Coating shall be applied in strict accordance with the directions of the manufacturer.
   3. Forms shall be removed in such manner as to assure the complete safety of the structure. In no case shall supporting forms or shoring be removed until the concrete has acquired sufficient strength.
C. Placing of Concrete:
   1. Only those methods and arrangements of equipment shall be used which will reduce to a minimum any segregation of coarse aggregate from the concrete.
   2. Every consideration shall be given to the proper placement of all concrete and the proper care of all concrete after placement.
   3. Concrete shall be deposited into the forms or on the grade as nearly as practicable in its final position and in such manner that the concrete will completely fill the forms.
   4. Vibration shall not be used to move concrete in a horizontal direction after initial placement.
   5. Concrete that has partially hardened or has been contaminated by foreign material shall not be deposited in the Work and shall be removed from the Site at no additional cost to the City.
   6. When inclined chutes beyond the mixer are permitted by the City, a baffle shall be provided at the bottom end so that concrete will drop vertically without segregation.
   7. No water shall be added to the concrete for any reason at the job site that will result in exceeding the specified water-cement ratio. Any water withheld when batching the concrete shall be noted on the material delivery ticket.
   8. Care shall be taken to assure proper concrete coverage of reinforcing steel as designed.
   9. Placement operations shall be performed in such a manner as to prevent loose earth falling into the excavation during placement of concrete.
   10. Concrete that might contact forms or reinforcing steel during placement shall be placed by the use of trunks or pipes whenever the drop exceeds six (6) feet for unexposed work, or three (3) feet for exposed work.
   11. When trunks or pipe are used, they shall be located at horizontal spacing of not to exceed ten (10) feet.
   12. Concrete for thrust restraints shall be placed in horizontal layers not exceeding two (2) feet in depth.
   13. Placing of concrete in thrust restraints shall be done in such manner as to prevent "cold joints," both horizontally and vertically.
D. Vibrating:
   1. In conformance with ACI 309, mechanical internal vibrators shall be used whenever possible in all formed concrete work.
   2. Vibrators shall be inserted at uniform spacing of twelve (12) inches to twenty (20) inches to assure thorough consolidation of all concrete.
   3. Vibrators shall be inserted and withdrawn vertically to a depth, which will assure penetration into the previous lift with vibration periods of from five (5) to fifteen (15) seconds.
   4. Form vibration and/or hand spading will be required at points inaccessible for thorough internal vibration.
   5. During placement of concrete, stand-by vibrators shall be immediately available in the event of mechanical failure in the vibrators being used.

E. No concrete shall be deposited below water. The excavation may be damp but shall contain no water.
F. Concrete shall be conveyed from the mixer to the place of final deposit by methods which will prevent the separation or loss of materials. Retempering of concrete is not permissible.
G. For formed surfaces, the Contractor shall break off ties, grout voids which are deeper than ½" and chip out honeycombed areas to solid concrete and grout flush with formed surface.
H. Curing shall be maintained continuously for seven days after placing concrete or until forms are removed and the surface finished. Concrete surface temperature is to be maintained between 50ºF and 100ºF for at least seven days.
I. Concrete shall not be placed on iced or frozen subgrade or when the air temperature is below 20ºF. Concreting shall not be continued when the air temperature is below 45ºF unless the following conditions are attained:
   1. Mixing water shall be heated (to a maximum of 150ºF).
   2. Aggregates shall be heated until free of all ice and frost.
   3. The concrete temperature after mixing shall be between 50ºF and 70ºF if the air temperature is 20ºF to 45ºF.
   4. After the concrete is placed, it shall be covered, protected, and heated so as to maintain a minimum of 70ºF air temperature for the 24 hours and 50ºF air temperature for the next six days. Open-flame type heaters are not permitted. Heating equipment not vented outside of the covering will not be permitted.
   5. Moist conditions shall be maintained during the heating period.
   6. All covering, heating equipment, etc., shall be on hand and approved by the Engineer before any concrete is placed.
J. Calcium chloride, as an admixture, shall not be used.
K. Exposed concrete is not to be placed in air temperatures above 100ºF. Cover, protect and cool work as to maintain the temperature of the concrete below 100ºF. The concrete temperature, after mixing, shall not be greater than 85ºF. Spray and/or shade aggregate piles and cool mixing water as required.

3.2 CONCRETE TEST CYLINDERS

A. All concrete test cylinders shall be provided by a certified testing laboratory. The testing of test cylinders, including transportation, shall be paid for by the Contractor.
B. The laboratory shall make at least three test cylinders for each day's pour in excess of 10 cubic yards of each class of concrete, and three test cylinders for each additional 50 cubic yards or major fraction thereof, as directed by the Engineer.
C. The laboratory shall ship the test cylinders to the laboratory on the second day, where the laboratory shall proceed to cure until tested. One cylinder shall be tested on the seventh day, and the remaining cylinders shall be tested on the 28th day. The test cylinders shall be identified at the time cast, and as to which pour is represented. Unsatisfactory tests of cylinders shall make the concrete represented subject to rejection, with consequent removal and replacement required.
D. Concrete test cylinders shall be cast and tested in accordance with ASTM C31 and C39. The testing laboratory shall furnish four copies of test reports for test cylinders and distributed as follows:
   1. 2 copies – City.
   2. 2 copies – Contractor.

3.3 CLEANUP

A. Cleanup operations shall be conducted in accordance with Section 01566 – Cleanup Operations

END OF SECTION

SECTION 03362 – SANITARY SEWER MANHOLE REHABILITATION

PART 1 - GENERAL

1.01 SUMMARY

A. This section covers all labor, work, materials and equipment required for repairing voids, restoring the structural integrity of manholes in corrosive and noncorrosive environments, eliminating infiltration and providing corrosion protection (antimicrobial additive or epoxy).

B. This shall be accomplished by applying a monolithic fiber reinforced cementitious liner to the entire manhole including the corbel, wall, bench and channel surfaces after all necessary surface preparation as recommended by the manufacturer is completed, including performing proper cleaning, stopping infiltration and creating a correct surface profile.

1.02 SPECIFICATION MODIFICATIONS

A. It is understood that throughout this section these Specifications may be modified by appropriate items in Section 01015 – Specific Project Requirements, or as otherwise indicated on the Contract Drawings.

1.03 RELATED SECTIONS

A. Section 01000 – General Project Requirements.
B. Section 01015 – Specific Project Requirements.
C. Section 01300 – Submittals.
D. Section 01320 – Construction Progress Documentation.
E. Section 01700 – Traffic Control.
F. Section 02575 – Surface Restoration.
G. Section 02702 – Testing Requirements for Sanitary Sewer: Mains and Manholes.
H. Section 03370 – Sanitary Sewer Manhole Construction.
I. Section 05010 – Sanitary Sewer Manhole Castings.
J. Section 06010 – Cured-In-Place Pipe (CIPP), CIPP Point Repairs and End Seals.

1.04 CODES AND STANDARDS

A. The publications listed below form a part of this specification to the extent referenced. The publications are referred to within the text by the basic designation only.

B. American Society for Testing and Materials (ASTM):

ASTM C109	Standard Test Method for Compressive Strength of Hydraulic-Cement Mortar.
ASTM C267	Standard Test Methods for Chemical Resistance of Mortars, Grouts, and Monolithic Surfacings and Polymer Concretes.
ASTM C293	Standard Test Method for Flexural Strength of Concrete.
ASTM C496	Standard Test Method for Splitting Tensile Strength of Cylindrical Concrete Specimens.
ASTM C596	Standard Test Method for Drying Shrinkage of Mortar Containing Hydraulic Cement.
ASTM C666	Standard Test Method for Resistance of Concrete to Rapid Freezing and Thawing.

ASTM C882	Test Method for Bond Strength of Epoxy-Resin Systems used with Concrete by Slant Shear.
ASTM D638	Test Method for Tensile Properties of Plastics.
ASTM D695	Test Method for Compressive Properties of Rigid Plastics.
ASTM D790	Standard Test Methods for Flexural Properties of Unreinforced and Reinforced Plastics and Electrical Insulating Materials.
ASTM D2240	Test Method for Rubber Property – Durometer Hardness.
ASTM D4541	Test Method for Pull-Off Strength of Coating Using Portable Adhesion Testers.

C. National Association of Corrosion Engineers (NACE International):

SP0188:2006	Discontinuity (Holiday) Testing of New Protective Coatings on Conductive Substrates.

1.05 INFORMATION PROVIDED BY THE CITY

A. As provided in the Contract Documents.

1.06 SUBMITTALS

A. Submit as specified in Section 01300 – Submittals.
B. Shop Drawings.
C. Product Data:
1. Submittal detailed data pertaining to the manhole lining products, manufacturer's installation recommendations, product data, mix designs and manufacturer's installation instructions.
2. Patching Materials.
3. Infiltration control materials.
4. Cementitious Liner:
(a) Test Data:
(i) Provide third party test data verifying the properties called for in the specifications including, but not limited to compressive strength, bond strength, tensile strength, and shrinkage.
(ii) When an antimicrobial admixture is to be used (Type 2 Liners), the testing shall be performed on cementitious material with the antimicrobial admixture to be used for the Work.
(iii) Testing data shall have been conducted within 3 years prior to the date of submittal.
(b) Manufacturer's installation instructions shall include, but are not limited to, the following:
(i) Recommendations for repairs.
(ii) Minimum and maximum application temperatures.
(iii) Instructions for material handling and mixing.
(iv) Recommendations for environmental controls during application, safety, and spray equipment.
(v) Requirements for surface preparation and surface conditions.
(vi) Recommendations for curing time before the cementitious liner may be subject to flow.
(vii) Recommendations for curing time before an epoxy topcoat can be applied to the cementitious liner.
(c) Antimicrobial Additive: Provide Manufacturer's mixing and dosing recommendations.

(d) Admixture Identifier.

5. Epoxy Lining System:
   (a) Specifications.
   (b) Technical data sheets.
   (c) Installation instructions: Provide detailed and complete information pertaining to the manufacturer's instructions for installation and repair of the epoxy liner system. The information and instructions shall include, but not limited to, the following:
      (i) Recommendations for storage of materials.
      (ii) Minimum and maximum application temperatures.
      (iii) Instructions for material handling and mixing.
      (iv) Recommendations for environmental controls during application, safety, and spray equipment.
      (v) Requirements for surface preparation and surface conditions to receive the epoxy liner system.
      (vi) Recommendations for application of multiple coats including curing time between coats.
      (vii) Procedures to repair pinholes, blisters, evidence of uneven coverage, poor bonding, or other types of repairs.
6. Test Data: Provide test data verifying the properties of the epoxy liner system where called for in the specifications. Data is to include, but is not limited to, the following:
   (a) Adhesion strength.
   (b) Hardness, Shore D.
   (c) Compressive strength.
   (d) Flexural strength.
   (e) Tensile strength.
7. Results of all quality control tests performed on the shipments of the epoxy products provided.

D. Samples:
   1. Not a required submittal.

E. Testing:
   1. Product testing in conformance with paragraph CEMENTIOUS MANHOLE LINING.

F. Other Submittals:
   1. Qualifications:
      (a) Submit resumes for each worker as required by paragraph QUALITY ASSURANCE. Include years of experience and verification of OSHA 10-hour training.
      (b) Provide cementitious liner manufacturer's certification for Applicators as required by paragraph QUALITY ASSURANCE.
      (c) As applicable, provide antimicrobial admixture manufacturer's certification for Applicators as required by paragraph QUALITY ASSURANCE.
      (d) References: Submit Contractor's references in accordance with paragraph QUALITY ASSURANCE.
   2. Submit Work Plan in accordance with paragraph WORK PLAN.
   3. Results of all quality control tests performed on samples taken during application.
   4. Contractor shall submit manhole acceptance testing reports prior to final payment.

5. Manufacturer's warranty on the liner system(s) provided.

1.07 QUALITY ASSURANCE

A. The Contractor is responsible for the quality assurance and quality control of the Work.

B. Qualifications for reinforced structural cementitious liner installation:

1. Manufacturer: Company specializing in manufacturing the products specified in this section shall have a minimum of ten (10) years of experience manufacturing the products provided and providing training for their Applicators.
2. Applicators:
   (a) Submit certification from manufacturer of the cementitious liner system that the Applicator has been trained and approved in the handling, mixing and application of the products to be used.
   (b) As applicable, submit certification from manufacturer of the antimicrobial admixture that the Applicator has been trained and approved in the handling, mixing and application of the products to be used.
   (c) Each Applicator shall have a minimum of three (3) years of experience applying the liner materials that will be installed as part of the Work. Submit resumes for each Applicator showing experience with installation of the proposed products including Manufacturer's training requirements and certifications.
3. Contractor shall provide the City three (3) references within the past three (3) years from the bid date for successful projects of similar size and difficulty for the exact cementitious products to be used by the Applicator. In lieu of references, an authorized manufacturer representative shall be onsite until they are satisfied with the performance of the Applicator.
4. Equipment: Submit manufacturer's certification approving the equipment to be used for applying the material(s) used on this contract.

C. Qualifications for epoxy lining installation:

1. Manufacturer: Company specializing in manufacturing the products specified in this section shall have a minimum of ten (10) years of experience manufacturing the products provided and providing training for their Applicators.
2. Applicators:
   (a) Submit certification from the manufacturer of the epoxy lining system that the Applicator has been trained and approved in the handling, mixing and application of the products to be used.
   (b) As applicable, submit certification from manufacturer of the antimicrobial admixture that the Applicator has been trained and approved in the handling, mixing and application of the products to be used.
   (c) Each Applicator shall have a minimum of three (3) years of experience applying the liner materials that will be installed as part of the Work. Submit resumes for each Applicator showing experience with installation of the proposed products including Manufacturer's training requirements and certifications.
3. Contractor shall provide the City three (3) references within the past three (3) years from the bid date for successful projects of similar size and difficulty for the exact cementitious products to be used by the Applicator. In lieu of references, an authorized manufacturer representative shall be onsite until they are satisfied with the performance of the Applicator.

4. Equipment: Submit manufacturer's certification approving the equipment to be used for applying the material(s) used on this contract. The equipment and materials to be utilized for the epoxy lining system shall be designed and manufactured to withstand the severe effects of hydrogen sulfide in a wastewater environment. Manufacturer of corrosion protection products shall have long proven experience in the production of the lining products utilized and shall have a satisfactory installation record.

D. All aspects of the installation of the liner system shall be in accordance with this specification and with the manufacturer's written information including specifications, technical data sheets and installation manual. If a discrepancy occurs between the manufacturer's recommendation and this specification, the City shall determine the appropriate action.

1.08 WORK PLAN

A. Contractor shall submit a Work Plan for approval by the City at least 30 days prior to the start of rehabilitation work.

B. Following approval by the City, Contractor shall review the Work Plan with the City's resident representative prior to starting work.

C. As a minimum, the following items shall be addressed in the work plan:

1. Written description of construction procedures, including equipment layout plan, order of work, flow diversion plan (if needed), and traffic control.
2. Detailed construction schedule for preparation, application and testing in accordance with Section 01320 – Construction Progress Documentation.
3. For use of private property beyond the limits of the Site, the Contractor shall conform to Section 01000 – General Project Requirements, paragraph EASEMENTS AND RIGHTS-OF-WAY.
4. Joint certificate of "Compliance with Specifications" between the manufacturer and applicator for the manhole rehabilitation material and installation.
5. Traffic Control plan in accordance with Section 01700 – Traffic Control.
6. Quality assurance requirements specified in paragraph QUALITY ASSURANCE.

1.09 PRODUCT DELIVERY, STORAGE AND HANDLING

A. Store all materials per the manufacturer's recommendations to prevent contamination and deterioration. See also Section 01000 – General Project Requirements.

B. Store all materials in a manner that will permit easy access for inspection and identification of each shipment.

1.10 WARRANTY

A. The cementitious manufacturer(s) and the epoxy liner system manufacturer(s) shall provide a five (5) year warranty against material defects and other defects that affect the structural integrity of the applied product including but not limited to infiltration and inflow, cracks, fractures, delamination, deterioration and any other defect affecting the performance of the product. Manufacturer's warranty shall be submitted in accordance with paragraph SUBMITTALS.

B. During the correction period, Contractor shall repair any defects that affect the water tightness or strength of the applied materials. Repairs shall be made at no additional cost to the City.

PART 2 - PRODUCTS

2.01 PATCHING MATERIAL

A. Patching material shall be compatible with cementitious liner materials.
B. Patching material shall be a quick setting cementitious material meeting the following minimum requirements:

Table 1. Patching Materials

Characteristic	Minimum Requirement	Specification
Compressive Strength	>1,500 psi at 1 hour >4,500 psi at 24 hours >7,000 psi at 28 days	ASTM C109
Bond	> 1600 psi, 28 days	ASTM C882
Shrinkage	0% at 90% Relative Humidity	ASTM C596
Placement Time	Up to 15 minutes	
Set Time	15 to 30 minutes	

C. Mix and apply according to the manufacturer's recommendations.
D. Manufacturer shall provide documentation that the product will adhere to the substrate.
E. Allowable Product Manufacturers:
   1. Permacast® Patch 20 by AP/M Permaform Products of Johnson, Iowa.
   2. Strong-Shield QSR Plus be The Strong Company, Inc. Pine Bluff, Arkansas.
   3. City approved equal.

2.02 INFILTRATION CONTROL MATERIAL

A. Provide a material specifically designed for fast setting to seal active leaks in preparation for lining of manholes.
B. Cementitious Lining Products:
   1. A rapid setting cementitious product, specifically formulated for leak control, shall be used to stop minor water infiltration. The material shall be mixed and applied according to the manufacturer's recommendations.
   2. Infiltration control material shall meet the following minimum requirements:

Table 2. Infiltration Control Materials

Characteristic	Specification	Minimum Requirement
Compressive Strength at 1 hour	ASTM C109	1,000 psi
Compressive Strength at 24 hours	ASTM C109	2,000 psi
Set Time		< 1 minute

   3. Allowable Manufacturers:
      (a) Strong-Plug® by Strong Company, Inc., Pine Bluff, Arkansas.
      (b) Permacast® Quick Plug by AP/M Permaform Products of Johnson, Iowa.
      (c) Quadex Quad-Plug as manufactured by Quadex, Inc.

(d) City approved equal.

C. Chemical Grout:
   1. Grout for this purpose shall have a minimum 28-day compressive strength of 250 psi.
   2. Mix and apply per manufacturer's recommendations.
   3. Allowable Manufacturers:
      (a) Avanti International, Houston, Texas.
      (b) De Neef, Cambridge, Massachusetts.
      (c) City approved equal. .

2.03 CEMENTITIOUS LINER

A. A cementitious product shall be used to form a structural monolithic liner covering all interior surfaces.

B. The cementitious liner material shall have the following minimum requirements:

Table 3. Cementitious Liner Materials

Characteristic	Specification	Minimum Requirement
Compressive Strength at 28 days	ASTM C109	8,000 psi
Tensile Strength	ASTM C496	800 psi
Flexural Strength	ASTM C293	1,000 psi
Bond Strength	ASTM C882	2,000 psi
Shrinkage @ 90% R.H.	ASTM C596	0%

C. Materials shall be as manufactured by the following:
   1. Strong-Seal MS-2C by Strong Company, Inc. Pine Bluff, Arkansas
   2. Permacast CR-9000 by Permacast Products, Johnson, Iowa
   3. Permaform MS-1000 by Permacast Products, Johnson, Iowa
   4. City approved equal.

2.04 ANTIMICROBIAL ADDITIVE

A. Acceptable manufacturers include the following:
   1. ConShield HD® as manufactured by APM LLC.
   2. As specified in Section 01015 – Specific Project Requirements.
   3. City approved equal.

B. Admixture Identifier: ConTint as certified by APM LLC. The color tinting shall be included to verify the concrete contains the antimicrobial admixture. The identifier shall be brown in color, or as otherwise approved by the City.

2.05 EPOXY TOPCOAT

A. Epoxy topcoat shall conform to this Section.

2.06 EPOXY LINER SYSTEMS

A. Shall be a monolithic, 100% solids, solvent-free epoxy or polyurethane lining with exceptionally high physical strengths and a broad range of chemical resistance.

B. Shall be specifically designed for applications onto properly prepared concrete surfaces.

C. Resin system shall be 100% solid based free of volatile organic compounds (VOC).
   1. Coating on horizontal and vertical surfaces shall be an integral part of the new or rehabilitated sewer manhole.
   2. The final coating shall be a monolithic lining with uniform thickness, covering the entire interior of the manhole being rehabilitated, including but not limited to channel invert, bench, barrel, walls, cone section, and chimney.
   3. The product must be capable of providing a structural liner application in excess of 250 mils in one coating application.
   4. Epoxy liner system shall meet the following minimum requirements:

Table 1. Epoxy Liner Requirements

Characteristic	Minimum Requirement	Specification
Adhesive Strength	Substrate Failure	ASTM D4541
Hardness, Shore D	≥ 80	ASTM D2240
Compressive Strength	>10,000 psi	ASTM D695
Flexural Strength	>9,000 psi	ASTM D790
Tensile Strength	>6,000 psi	ASTM D638

   5. Mixing and Handling: All two component epoxies should be spray applied using a plural component application system capable of spraying at distances in excess of 300 feet from the spray rig, and at application temperatures per manufacturer's recommendations.

D. Allowable Lining product manufacturers includes the following:
   1. SprayWall® by SprayRoq Protective Lining Systems.
   2. Raven 405 as manufactured by Raven Lining Systems.
   3. Warren S301 as manufactured by Warren Environmental, Inc.
   4. Cor+Gard 301 as manufactured by Permaform.
   5. City-approved equal.

2.07 WATER

A. All water used to mix products shall be potable.

2.08 PIPE END SEAL

A. Pipe End Seals shall conform to the requirements of Section 06010 – Cured-in-Place-Pipe (CIPP), CIPP Point Repairs and End Seals.

2.09 OTHER MATERIALS

A. No other material shall be used with the mixes described above without City pre-approval.

2.10 MANHOLE FRAME AND COVER CASTINGS

A. As specified in Section 05010 – Sanitary Sewer Manhole Castings.

PART 3 - EXECUTION

3.01 WEATHER LIMITATIONS

A. Materials shall be applied in accordance with the Manufacturer's recommendations and as specified below.

B. No application of material shall be made while ambient temperature is below 40 degrees F, to frozen surfaces, or if freezing temperatures are expected to occur within twenty-four (24) hours after application.

3.02 MANHOLE PREPARARATION

A. Diversion of Flow:
   1. Flow through the manhole shall be blocked and bypassed as necessary.
   2. Provide all labor, equipment and materials to plug, divert, or bypass the flow from laterals and pipes entering the manhole. Adequately sized pumps shall be provided and used by the Contractor, as needed.

B. Manhole Cleaning:
   1. Place covers over invert channels to prevent material from entering the sanitary sewer. Wire mesh and fabric filters may be used to allow water to pass while preventing solid material from entering the sewer system.
   2. The floor and interior walls of the structure shall be thoroughly cleaned and made free of all foreign materials including dirt, grit, roots, grease, sludge and all debris or material that may be attached to the wall or bottom of the manhole. Cleaning shall result in a clean, sound surface that displays the concrete surface profile (CSP) recommended by the coating material manufacturer.
   3. High pressure water blasting with a minimum of 3500 psi shall be used to clean free all foreign material within the structure.
   4. When grease or oil are present within the structure, an approved detergent or muriatic acid shall be used integrally with the high-pressure cleaning water.
   5. Other means besides water blasting may be needed to obtain the appropriate concrete surface profile (CSP) such as sand blasting or abrasive blasting.
   6. Remove all loose and protruding mortar, brick, and concrete. Do not allow loose material to enter the sewer system.
   7. All manhole steps shall be removed flush with the wall and the wall repaired prior to lining.

C. Seal Active Leaks:
   1. All discernible voids behind the manhole wall shall be filled patching material or cementitious liner (based upon manufacturer's recommendations).
   2. Active leaks shall be stopped using infiltration control material in accordance with the manufacturer's recommendations.
   3. Some leaks may require weep holes to localize the infiltration during the application.
   4. After application, the weep holes shall be plugged with infiltration control material prior to applying the cementitious liner.
   5. If necessary, drilling may be required to pressure grout using a chemical grout.
   6. If fast setting concrete is used, leaks must be stopped for 12 hours before the liner can be installed.

D. Casting Adjustments:
   1. Manhole castings that are shifted from their original position or are not flush with pavement shall be adjusted to pavement elevation in accordance with Section 05010 – Sanitary Sewer Manhole Castings.

2. Center the manhole frame and cover over the manhole opening.
3. Adjust the frame and cover top elevation to be set ½-inch to ¾-inch below the adjacent street grade using adjustment rings in accordance with Section 03370 – Sanitary Sewer Manhole Construction.
4. Perform pavement removal and replacement in accordance with Sections 02575 – Surface Restoration and 03370 – Sanitary Sewer Manhole Construction.

E. Channel and Bench Repair:
1. At locations indicated on the Drawings, the manhole shall have the existing bench and channel rebuilt as specified herein.
2. Thoroughly clean the bench and invert surface by pressure washing. Loose bricks and mortar, unsound concrete, grease, roots, mud and debris shall be completely removed to a depth necessary to expose a sound substrate to allow for proper forming, shaping and finishing of the bench and invert.
3. Actively leaking areas shall be plugged.
4. Voids and cracks shall be patched.
5. Apply the patching material to the channel. The material shall be troweled uniformly onto the invert at a minimum half (½) inch thickness at the invert extending out onto the bench of the manhole sufficiently to tie into the structural monolithic liner. The cementitious patch material shall not be allowed to enter any pipes.
6. Reshape and repair all inverts to provide smooth, uniform flow characteristics through the structure. Benches and inverts shall be shaped and finished smooth and free of ridges so that the manholes will be self-cleaning and free of areas where solids may be deposited as sewage flows through the manhole from all in-flowing pipes to the out-flowing pipes.
7. The flow through the manhole may be re-established 30 minutes after the patch material sets, or as recommended by the patching material manufacturer, whichever is longer.

F. Manhole liners shall not be installed until sealing/replacement of manhole frame, grade adjustments, bench buildup, partial manhole replacement, manhole grouting, CIPP installation, and/or all sewer replacement/repairs are complete.

3.03 INSPECTION OF SURFACE PREPARATION

A. Contractor shall inspect all surfaces specified to receive a protective coating upon completion of surface preparation. Contractor shall notify the City of any noticeable disparity in the surfaces which may interfere with the proper preparation or application of the protective coating.

B. Provide a coating environment as recommended by the manufacturer of corrosion protection material including drying or wetting the structure surfaces to be coated and providing optimal temperature and moisture conditions in the structure.

C. The City reserves the right to inspect the surface preparation prior to application of the cementitious liner. When the final preparation is complete, the Contractor shall notify the City that the manhole is ready for the application of the liner material. Application of the liner material shall not be conducted until direction is provided by the City.

D. Application of liner shall commence within a time frame as recommended by the manufacturer.

3.04 MANHOLE LINING TYPE

A. The type of liner to be used for each rehabilitated manhole shall be as noted on the Drawings. Liner types associated with manhole rehabilitation include the following:
   1. Type 1 (see Figure 1):
      (a) Manhole Preparation.
      (b) Cementitious Liner.
   2. Type 2 (see Figure 2):
      (a) Manhole Preparation.
      (b) Cementitious Liner.
      (c) Antimicrobial Admixture.
   3. Type 3 (see Figure 3):
      (a) Manhole Preparation.
      (b) Cementitious Liner.
      (c) Epoxy Top Coat.

3.05 ANTIMICROBIAL ADMIXTURE

A. Where corrosive environments are indicated, antimicrobial additive shall be incorporated, in accordance with manufacturer's recommendations, into the mix of cementitious materials installed on the interior of the manhole.

3.06 CEMENTITIOUS LINER

A. The manhole surface shall be totally saturated with water just prior to application of the cementitious material, as recommended by the manufacturer.
B. Application equipment shall be as recommended by materials manufacturer.
C. Mixing:
   1. Mixing shall be done in accordance with the material manufacturer's recommendations.
   2. Addition of water, antimicrobial additive (as required), and color tinting (as required) shall be in accordance with the manufacturer's recommendations.
   3. As required, addition of antimicrobial additive and color tinting shall be performed in the presence of the City's representative.
   4. Re-mixing or tempering shall not be permitted. Rebound material shall not be re-used.
   5. The mixer shall be cleaned to remove all adherent materials from the mixing valves and from the drum at regular intervals as recommended by the manufacturer.
   6. Mix temperature at the time of application shall be below 90 degrees F.
   7. Mix water temperature shall be between 40 degrees F and 85 degrees F.
D. Spraying:
   1. Protect all connecting pipes from overspray by blocking each pipe entrance.
   2. Materials shall be applied a minimum of one (1) inch thick from the bottom of the frame or polymer grade rings. Contractor shall take at least one thickness measurement at the chimney, corbel, wall, bench and channel in the presence of the City's representative. Multiple measurements in each area may be required.
   3. Troweling shall be performed to compact the material into voids. A brush finish may be applied to the trowel finish surface.
   4. Bench application: The cementitious material shall be applied to the bench in such a manner that a gradual slope is produced from the walls to the channel with a minimum thickness of (1) inch covering the entire bench to the edge of the

channel. The wall/bench intersection shall be rounded to a uniform radius the full circumference of the intersection.

5. Surface Defect Repair: Continual inspection during the coating application shall be maintained. Any imperfections shall be removed and replaced with sound material.

E. Curing:

1. Place cover on manhole within 15 minutes of finishing the application and keep in place for a period complying with manufacturer recommendations. The liner material shall have a minimum of four (4) hours cure time before being subjected to active flow.

3.07 EPOXY TOP COAT

A. Where indicated, epoxy top coat shall be applied as specified in this Section.

3.08 EPOXY LINER APPLICATION

A. Epoxy liner shall not be installed until the cementitious liner specified in this Section has cured in accordance with the manufacturer's requirements.

B. Application procedures shall conform to the recommendations of the manufacturer, including material handling, mixing, environmental controls during application, safety, and spray equipment. Contractor shall submit manufacturer's installation procedures in accordance with paragraph SUBMITTALS.

C. The surface to receive the epoxy liner system shall be prepared in accordance with the Manufacturer's recommendations.

D. The spray equipment shall be specifically designed to accurately ratio and apply the specified protective coating materials, shall be regularly maintained, in proper working order, and shall be approved by the manufacturer of the epoxy liner system.

E. The epoxy liner system shall be applied by the Applicator.

F. Re-mixing or tempering shall not be permitted. Rebound materials shall not be reused.

G. Specified surfaces shall be coated by spray application of a solventless, 100% solids, self-priming epoxy or polyurethane protective coating as called for in Section 2.

H. Epoxy Liner System Thickness:

1. The thickness of the epoxy liner system shall be as indicated on the Drawings or as specified in Section 01015 – Specific Project Requirements.
2. Minimum liner thickness: 125 mils
3. Liner shall be uniform throughout.
4. Liner thickness shall be regularly checked using a wet film gauge to ensure that the minimum thickness is being maintained.

I. Spray application equipment approved by the coating manufacturer shall be used to apply each coat of the protective coating.

J. If necessary, subsequent top-coating or additional coats of the epoxy liner system shall be done in accordance with the Manufacturer's recommendations.

K. The interior liner shall be applied to the manhole interior from the top of the manhole chimney to the bench/trough, including the bench/trough.

1. Bench and trough shall be sprayed in such a manner as to blend with wall liner.
2. Do not apply to epoxy liner system to metal castings. Casting shall be appropriately masked.

L. The minimum curing time between coatings shall be in accordance with the Manufacturer's recommendations.

M. The final application shall have a minimum of three (3) hours cure time before being subjected to active flow or as recommended by the manufacturer.

3.09 PROTECTION OF ADJACENT SURFACES

A. During progress of the work, where appearance is important, adjacent areas or grounds which may be permanently discolored, stained or otherwise damaged by dust and rebound, shall be adequately protected.
B. When directed by the City or as necessary, surfaces shall be cleaned by early scraping, brushing or washing as the surroundings permit.

3.10 INSPECTION AND TESTING

A. Cementitious Liner:
   1. Four (4) two-inch cube specimens shall be cast and properly packaged, labeled, and submitted by the Contractor for compression strength testing per ASTM C109.
   2. Testing shall be conducted by an independent testing laboratory at no additional cost to the City.
   3. At a minimum, testing shall be conducted based in the following frequencies:
      (a) Test specimens shall be prepared daily during the first week of work.
      (b) Test specimens shall be prepared each day the Contractor begins using a newly delivered batch of product.
      (c) Test specimens shall be prepared each day a new person mixes the material.
      (d) Test specimens shall be prepared each day the inspector deems necessary.
   4. Submit test results to the City's representative.
B. Visual Inspection:
   1. A visual inspection shall be made by the City.
   2. Any deficiencies in the liner system shall be marked and repaired according to the procedures set forth by manufacturer.
C. Epoxy Liner Discontinuity (Holiday) Testing:
   1. After the epoxy liner system has set hard to the touch, it shall be inspected with high-voltage holiday detection equipment. An induced holiday shall be made on to the coated concrete surface and shall serve to determine the minimum / maximum voltage to be used to test the coating for holidays at the particular area.
   2. The spark tester shall be initially set at 100 volts per 1 mil of film thickness applied but may be adjusted as necessary to detect in induced holiday.
   3. All detected holidays shall be marked and repaired by abrading the coating surface with grit disc paper or other hand tooling method.
   4. After abrading and cleaning, additional epoxy liner material can be applied to the repair area.
   5. All touch-up/repair procedures shall follow the protective coating manufacturer's recommendation.
D. Bond Strength Testing:
   1. The City reserves the right to perform measurements of the bond strength of the cementitious liner and the epoxy liner system to the substrate (structure or cementitious liner).
   2. Bond strength may be measured in accordance with ASTM D4541.
   3. Any measurements detected to have inadequate bond strength shall be evaluated by the City. Further bond tests may be performed in that area to determine the extent of potentially deficient bonded area and repairs shall be made by Applicator in strict accordance with manufacturer recommendations.

4. Contractor shall repair all holes or other defects occurring as required to perform the bond strength testing. Repairs shall be made at no additional cost to the City. Repairs should be made with manhole lining system manufacturer recommended products and procedures.

E. Vacuum Testing:
1. Vacuum testing shall be conducted in accordance with Section 02702 – Testing Requirements for Sanitary Sewer: Mains and Manholes.
2. The City shall identify which manholes are to be vacuum tested. Designation of manholes will be done after the cementitious liner has been installed.
3. All manholes designated by the City to be vacuum tested shall have pipe end seals installed.
4. End seals shall be installed on any connecting pipe that has not been rehabilitated with CIPP.
5. End seals shall be installed after the cementitious liner in accordance with Section 06010 – Cured-In-Place Pipe (CIPP), CIPP Point Repairs and End Seals.
6. A minimum of ½ inch of cementitious lining material shall be placed over each end seal's 2-inch wall overlap to ensure a seal between the end seal and the lining.
7. Contractor shall perform initial vacuum testing on 20% (identified by the City) of the rehabilitated manholes (rounded up) with main line diameters of 15 inches or less. Contractor shall correct any deficiencies found and perform retesting. However, if liner deficiencies are found in more than 10% of the tested manholes, the Contractor shall test an additional 20% of the rehabilitated manholes, identified by the City, correct any deficiencies found, and perform retesting. If deficiencies in the cementitious liner are found in more than 10% of the second 20% of tested manholes, the contractor shall test all rehabilitated manholes, correct any deficiencies found and perform retesting, all at no additional cost to the City.

3.11 FLOW RESTORATION

A. The flow may be reestablished in the manhole when the repair material has properly cured so that the flow does not wash away the applied material.

3.12 QUALITY

A. The finished manhole surface shall be free of blisters, runs, sags, inconsistencies, voids, and other defects. Any defects which will affect the integrity or strength, of the manhole shall be repaired at the Contractor's expense, in a manner acceptable to the City.

3.13 CLEANUP

A. After installation and testing, the Contractor shall clean up the Site in accordance with Section 01566 – Cleanup Operations.

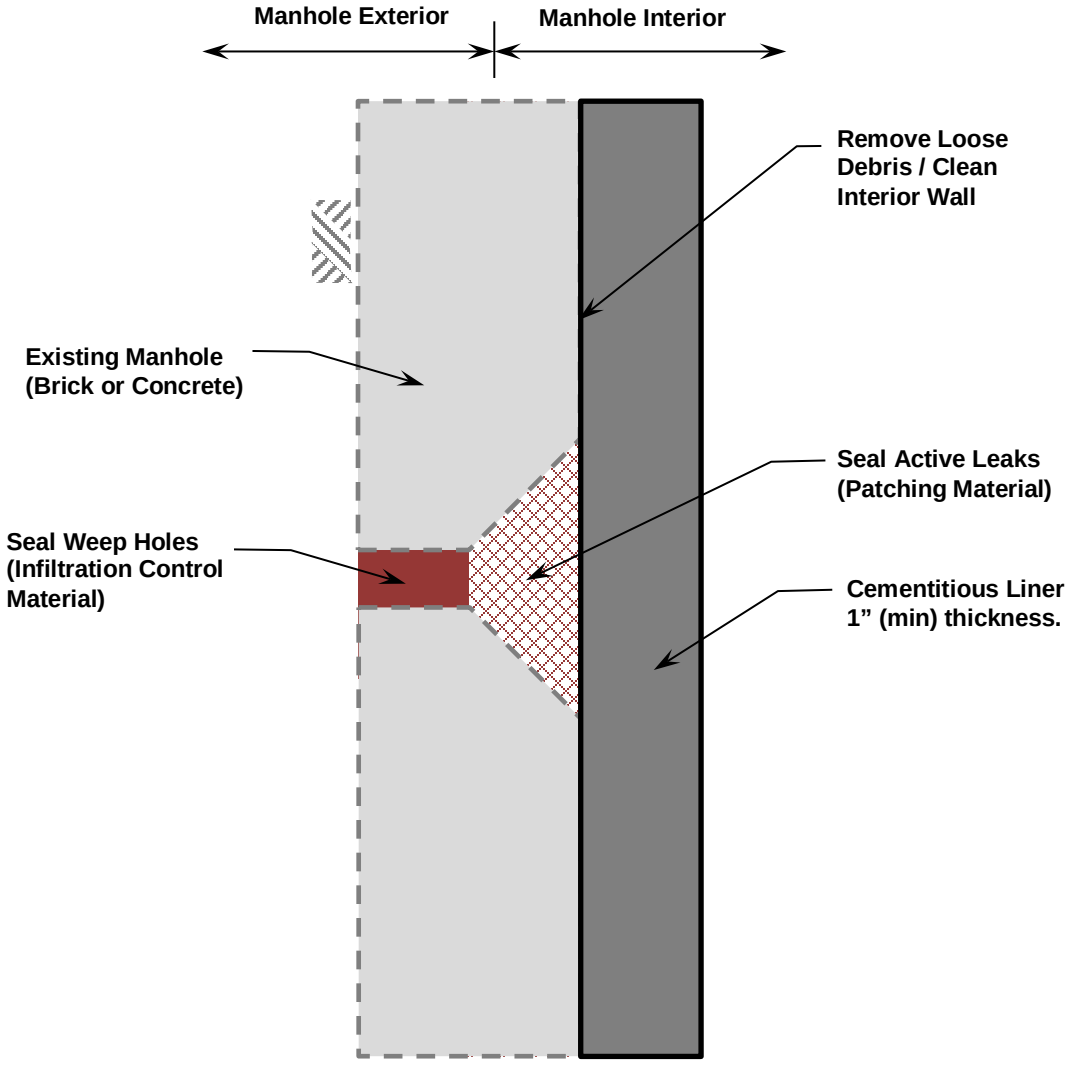

Figure 1 – Type 1 Liner / Cementitious Liner
(Non-corrosive environment)

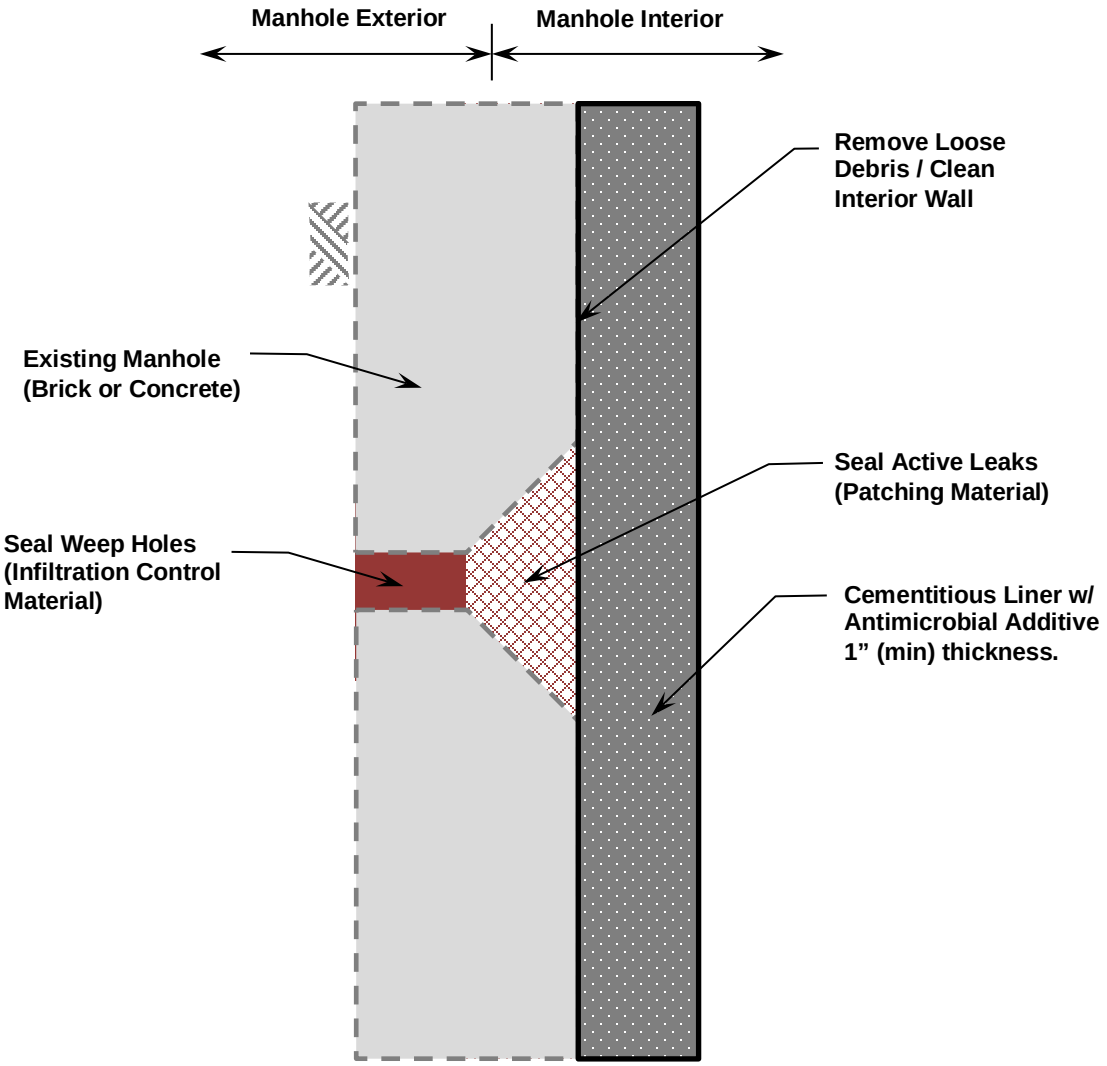

Figure 2 – Type 2 Liner / Cementitious Liner with Antimicrobial Additive
(Corrosive environment)

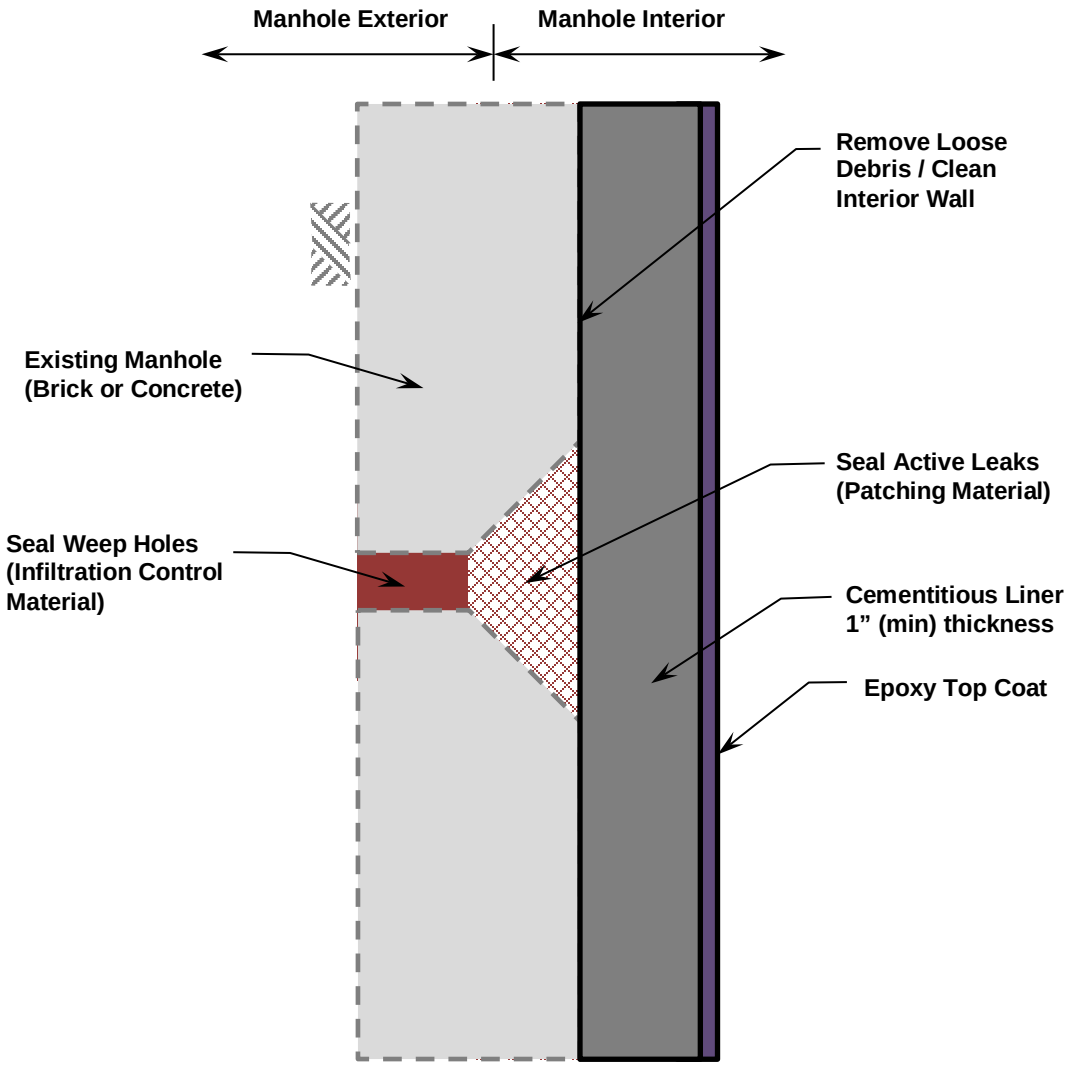

Figure 3 – Type 3 Liner / Cementitious Liner with Epoxy Top Coat
(Corrosive environments)

END OF SECTION

SECTION 03370 – SANITARY SEWER MANHOLE CONSTRUCTION

PART 1 - GENERAL

1.01 SUMMARY

A. This section covers the construction of standard sanitary sewer manholes. Standard manholes shall be constructed complete with frame and cover, anchors, waterproofing, seals, barriers, joint sealant, fittings and all other specified requirements in accordance with the Contract Documents.

1.02 SPECIFICATION MODIFICATIONS

A. It is understood that throughout this section, these Specifications may be modified by appropriate items in Section 01015 – Specific Project Requirements or as otherwise indicated on the Contract Drawings.

1.03 RELATED SECTIONS

A. Section 01015 – Specific Project Requirements.
B. Section 01300 – Submittals.
C. Section 02200 – Earthwork.
D. Section 02250 – Trenching, Pipe Embedment and Backfill.
E. Section 02702 – Sewer Pipe and Manhole Testing.
F. Section 03000 – Miscellaneous Concrete.
G. Section 05010 – Sanitary Sewer Manhole Castings.

1.04 CODES AND STANDARDS

A. The publications listed below form a part of this specification to the extent referenced. The publications are referred to within the text by the basic designation only.
B. American Society for Testing and Materials (ASTM):

ASTM A185	Standard Specification for Steel Welded Wire Reinforcement, Plain, for Concrete.
ASTM A536	Standard Specification for Ductile Iron Castings.
ASTM A615	Standard Specification for Deformed and Plain Carbon-Steel Bars for Concrete Reinforcement.
ASTM C76	Standard Specification for Reinforced Concrete Culvert, Storm Drain and Sewer Pipe.
ASTM C109	Standard Test Method for Compressive Strength of Hydraulic Cement Mortars (Using 2-in. or [50-mm] Cube Specimens).
ASTM C191	Standard Test Methods for Time of Setting of Hydraulic Cement by Vicat Needle.
ASTM C443	Standard Specification for Joints for Circular Pipe and Manholes, Using Rubber Gaskets.
ASTM C478	Standard Specification for Circular Precast Reinforced Concrete Manhole Sections.
ASTM C827	Standard Test Method for Change in Height at Early Ages of Cylindrical Specimens of Cementitious Mixtures.
ASTM C923	Standard Specification for Resilient Connectors between Reinforced Concrete Manhole Structures, Pipes and Laterals.
ASTM C990	Standard Specification for Joints for Concrete Pipe, Manholes and Precast Box Sections Using Preformed Flexible Joint Sealants.

ASTM C1107	Standard Specification for Packaged Dry, Hydraulic-Cement Grout (Non-shrink).
ASTM D4976	Standard Specification for Polyethylene Plastics Molding and Extrusion Materials.

1.05 DEFINITIONS

A. Paved Areas – Areas for which the final surfacing will be street pavement, shoulders, driveways, parking lots, sidewalks, gravel roads or other surface features.
B. Unpaved Areas – Areas for which the final surfacing is a green space.

1.06 INFORMATION PROVIDED BY THE CITY

A. As provided in the Contract Documents.

1.07 SUBMITTALS

A. Submit as specified in Section 01300 – Submittals.
B. Shop Drawings:
   1. Submit for approval general arrangement drawings showing manhole size, height and location of access cover, steps and all pipe penetrations.
   2. Submit for approval joint construction details.
   3. Submit for approval details on reinforcement if requested.
C. Product Data:
   1. Submit for review and approval manufacturer's catalogue/product data and installation instructions for the following:
      (a) Manhole adjustment rings.
      (b) Resilient connectors.
      (c) Joint sealant.
      (d) External joint seal.
      (e) Internal joint seal.
      (f) External frame chimney seal.
      (g) Grade ring liner.
      (h) Non-shrink grout.
      (i) Antimicrobial additive.
      (j) Waterproofing additive.
      (k) Color tinting additive.
D. Certificates:
   1. Certification from precast manufacturer that the precast structures were fabricated to include the specified antimicrobial additive, admixture identifier and waterproofing additives.
E. Other:
   1. Precast concrete mix design.
   2. Compressive strength testing of cylinders.
   3. Compressive strength testing of cores.

1.08 QUALITY ASSURANCE

A. The Contractor is responsible for the quality assurance and quality control of the Work.
B. The installation contractor shall be a licensed underground utility contractor licensed for such work in the state of Missouri. The installing contractor's license shall be current and be state certified/state registered.

C. Manufacturers of all precast concrete structures must be a KCMO "Approved Precast Concrete Product Supplier" as approved as part of the Public Works Quality Management Plan.

1.09 PRODUCT DELIVERY, STORAGE AND HANDLING

A. Cement, Aggregate and Reinforcement shall be in accordance with Section 03000 – Miscellaneous Concrete and as specified herein.
B. Handle materials and other accessories in such manner as to ensure delivery to the trench in a sound undamaged condition. Take special care not to damage linings. If the lining is damaged, the Contractor shall make satisfactory repairs.
C. Non-shrink grout – Deliver materials to project in Manufacturer's original, unopened packaging, with labels clearly identifying product name, manufacturer and expiration date. Store grout in a cool, dry place, out of the sun.
D. Precast concrete sections shall not be delivered to the job until the concrete control cylinders have attained a strength of at least 80 percent of the specified minimum.
E. Precast concrete sections shall be handled carefully and shall not be bumped or dropped. Hooks shall not be permitted to come in contact with joint sections.
F. Precast concrete sections shall be inspected when delivered. All cracked and visibly defective units shall be rejected. City/Design Professional reserves the right to inspect the production of the units at the manufacturing plant.

1.10 MANHOLE TYPES

A. Unless otherwise noted on the Drawings or in Section 01015 – Specific Project Requirements, all manhole types shall conform to the following:
   1. Standard Precast Manhole – Eccentric Cone: Use for all newly constructed manholes having a depth (measured from top of casting to top of base) of more than 6 feet. See Standard Drawing 03370-1.
   2. Standard Precast Manhole – Shallow Type: Use for all newly constructed manholes having a depth (measured from top of casting to top of base) of less than or equal to than 6 feet. See Standard Drawing 03370-2.

PART 2 - PRODUCTS

2.01 PRECAST CONCRETE

A. Materials and Fabrication:
   1. Precast concrete shall conform to ASTM C478.
   2. Air entraining agents shall be added to the concrete to provide 4 to 6 percent entrained air.
   3. Submit for review and approval the precast concrete manufacture's mix design(s) for precast structures.

B. Quality Control:
   1. Compressive Testing of Cylinders – Conduct in accordance with ASTM C478. Provide compressive testing results as requested by the City/Design Professional or as required by Section 01015 – Specific Project Requirements.
   2. Compression Testing of Cores – Conduct in accordance with ASTM C478 and submit results as requested by the City/Design Professional and as required by Section 01015 – Specific Project Requirements.

2.02 MANHOLES

A. The minimum inside diameter of the manhole shall be as follows:

Table 1. Minimum Manhole Diameter

Sewer Pipe Size (inches)	**Manhole Inside Diameter** (inches)	**Min. Manhole Frame Clear Opening** (inches)
Up to 36” (inch)	60”	30”
42”(inch) through 48”(inch)	72” See Standard Drawing 03370-3	30”

B. Reducing sections may be used at six (6) feet or more above the invert.
C. Cone Sections shall be eccentric, unless otherwise specified by City/Design Professional.
D. All required pipe openings shall be plant cast, unless otherwise noted.
E. Pre-cast sections may be provided with lifting notches on the inside faces of the walls to facilitate handling. Lifting notches shall be not more than 3 inches deep. Holes extending through the wall will not be acceptable.
F. If precast base sections are provided with integral concrete invert fill, a roughened surface shall be provided to improve the bond with the final invert fill. A minimum of 2 inches of the concrete invert fill shall be installed in the field.

2.03 MANHOLE ADJUSTMENT RINGS

A. Adjusting rings shall be designed to withstand the wheel loading requirements of AASHTO HS25.
B. Adjusting rings shall be designed and fabricated to withstand deterioration and degradation when exposed to hydrogen sulfide.
C. Acceptable Manufacturers include:
   1. Cretex Pro Ring.
   2. East Jordan (EJ) Infrariser.
   3. LadTech.

2.04 RESILIENT CONNECTORS

A. Manholes shall be provided with circular openings, with continuous, circular, resilient connectors cast into the wall.
B. Resilient connectors shall be installed in accordance with the manufacturer’s recommendations, except that connectors shall be positioned so that sealing or resealing operations may be accomplished from inside the manhole.
C. Resilient connectors shall conform to ASTM C923.
D. Mortar connections will be allowed only if prior approval has been given by the City/Design Professional.
E. Acceptable Products/Manufacturer’s include the following:
   1. The PSX: Direct Drive as manufactured by Press-Seal Corporation:
      (a) When the PSX: Direct Drive connector is used, it shall be double banded and the take-up screws for the gasket clamps shall be positioned 180 degrees apart.

2. The Quik-LOK Connector as manufactured by A-LOK Products Inc.:
   (a) When the Quik-LOK connector is used, it shall be double banded and the take-up screws for the gasket clamps shall be positioned 180 degrees apart.

2.05 JOINT SEALANT

A. Joints shall be sealed using preformed flexible joint sealants conforming to ASTM C990. The minimum bead dimension shall be one inch.
B. Install in accordance with manufacturer's recommendations.

2.06 EXTERNAL JOINT SEAL

A. External manhole seals shall be installed on new manhole installations, replacements or when project conditions allow for excavation of the manhole sections.
B. External joint seals shall be a minimum of 9 inches wide.
C. Heat Shrinkable Wrap-around Sleeves: Acceptable products include the following:
   1. CCI Pipeline Systems: WrapidSealTM.
D. External Joint Banding Systems:
   1. Infi-Shield®: External Gator Wrap.
   2. Mar Mac Construction Products, Inc.: MacWrap External Sealing Band.
   3. Cretex Specialty Products: Cretex Wrap.
E. Standard Precast Manhole – Shallow Type:
   1. Install an internal Cretex Seal or Infi-Shield Uni-Band External Seal where the chimney meets the flat top of manholes.
F. Materials for manhole seals shall be able to withstand hydrogen sulfide and other corrosive gases found in sewers.
G. Install in accordance with manufacturer's recommendations.

2.07 INTERNAL JOINT SEAL

A. Internal manhole seals shall be used when project conditions prevent the use of external manhole seals or at the direction of the City/Design Professional.
B. Acceptable products for internal manhole seal shall include the following:
   1. Cretex – Internal Joint Seal.
C. Materials for manhole seals shall be able to withstand hydrogen sulfide and other corrosive gases found in sewers.
D. Install in accordance with manufacturer's recommendations.

2.08 EXTERNAL FRAME CHIMNEY SEAL

A. Acceptable manufacturers for external frame chimney seal include the following:
   1. CCI Pipeline Systems – Wrapid Seal.
   2. Infi-Shield – Gator Wrap.
   3. Infi-Shield – Uniband.
B. Install in accordance with manufacturer's recommendations.

2.09 GRADE RING LINER

A. Grade ring liners shall be installed on all manholes in paved applications.
B. Acceptable manufacturers for grade ring liners include the following:
   1. WaterLOK Grade Ring Liners as manufactured by A-LOK Products, Inc.
   2. I&I Barriers as manufactured by Strike Tool Inc.
C. Install in accordance with manufacturer's recommendations.

2.10 FRAMES, COVERS AND GRATINGS FOR MANHOLES

A. Shall conform to Section 05010 – Sanitary Sewer Manhole Castings.

2.11 NON-SHRINK GROUT

A. Non-shrink grout shall conform to ASTM C1107, Grades B and C.
B. Non-shrink grout shall be a trowelable mix, in the plastic state and show no expansion after set (as tested per ASTM C827). Non-shrink grout shall develop a compressive strength not less than three thousand (3,000) psi within twenty-four (24) hours per ASTM C109. The placement time shall be not less than forty-five (45) minutes based on initial set per ASTM C191.
C. Non-shrink grout shall be ConShield Joint Set as manufactured by ConShield Technologies Inc. Mix and apply in accordance with the manufacturer's recommendations.

2.12 ANTIMICROBIAL ADDITIVE

A. Unless otherwise specified in Section 01015 – Specific Project Requirements, an antimicrobial additive shall be included in the following:
   1. Precast concrete sections.
   2. Miscellaneous concrete placed in the interior of the manhole.
   3. Non-shrink grout placed in the interior of the manhole.
   4. Precast concrete base.
   5. Concrete used for cast-in-place concrete base.
B. Acceptable manufacturers include the following:
   1. ConShield HD® as manufactured by ConShield Technologies Inc.
   2. As specified in Section 01015 – Specific Project Requirements.
C. Admixture Identifier – Color tinting shall be included to identify that the concrete contains the antimicrobial admixture. The identifier shall be CONTINT and shall be brown in color.

2.13 WATERPROOFING ADDITIVE

A. A waterproofing additive shall be included in the following:
   1. Precast concrete manholes and manhole bases.
   2. Non-shrink grout placed in the interior of a manhole
   3. Miscellaneous concrete placed in the interior of a manhole
   4. Concrete used for cast-in-place concrete base
B. Acceptable manufacturers include the following:
   1. Crystal-X as manufactured by ConShield Technologies.
   2. Xypex as manufactured by Xypex Chemical.
   3. As specified in Section 01015 – Specific Project Requirements.

2.14 GRANULAR BEDDING MATERIAL

A. Granular bedding material shall be as specified in Section 02250 – Trenching, Pipe Embedment and Backfill.

2.15 MISCELLANEOUS CONCRETE

A. Miscellaneous concrete shall conform to Section 03000 – Miscellaneous Concrete.

PART 3 - EXECUTION

3.01 EXCAVATION, BACKFILL AND COMPACTION

A. Excavation, backfill and compaction for manholes shall be in accordance with Section 02200 – Earthwork.
B. Excavation, backfill and compaction operation shall be achieved in a suitable and orderly manner providing a minimum disturbance to the general public.
C. Depth of excavation shall be to that required for proper installation of the manhole or structure. Over-depth excavation may be required if the subgrade is unsuitable or unstable. Over-depth excavation due to unsuitable or unstable subgrades shall be backfilled as required by the City/Design Professional. Over-depth excavation occurring through an oversight by the Contractor shall be backfilled as required by the City/Design Professional at no additional cost to the City.
D. Side clearance outside the manhole and/or structures shall be no greater than necessary to allow for forming, connection of piping, proper application of special coatings and access for inspection.

3.02 MANHOLE BASE

A. Precast Concrete Bases:
   1. The bottom precast wall section shall not be used for supporting or leveling the other wall sections prior to pouring the base.
   2. The subgrade materials shall be excavated to undisturbed earth and a uniform elevation to allow for a minimum of 4 inches of granular bedding material. The surface of the granular material shall be carefully graded and the base section accurately set so that connecting pipes will be on the proper line and grade. The elevation of the granular material shall be adjusted as required until proper grade and alignment of the base section has been attained.
   3. No wedging or blocking under precast concrete bases is permitted.
B. Cast-in-Place Concrete Bases:
   1. If a precast concrete base cannot be used, a poured concrete base may be used.
   2. The cast-in-place forming shall follow the design of the precast base as shown in Standard Drawing 03370-1 and as described herein.
   3. Cast-in-place concrete bases shall have a minimum thickness of eight (8) inches.
   4. Concrete shall be placed on undisturbed earth in accordance with requirements of Section 03000 – Miscellaneous Concrete.
   5. The bottom wall section shall be embedded in the base section a minimum of four (4) inches.
   6. Concrete blocks shall be used for supporting or leveling the bottom wall section prior to pouring the base. Use of Wood blocks will not be accepted.
   7. When resilient connectors are used with cast-in-place bases, granular bedding material shall be used instead of concrete fill under the connecting pipes. Granular bedding material shall be place on undisturbed earth.

3.03 MANHOLE INVERTS

A. In no case shall the invert section through a manhole be greater than that of the outgoing pipe.
B. The shape of the invert shall conform exactly to the lower half of the pipe it connects.
C. Side branches shall be connected with as large radius of curve as practicable.
D. All inverts shall be troweled to a smooth, even surface.
E. Inverts shall be constructed of be concrete as specified in Section 03000 –Miscellaneous Concrete.

F. Concrete shall be troweled (or formed if inverts are pre-cast) to produce a dense, smooth finish.
G. The invert channel shall be "U" shaped in cross section and shall extend upward as shown in Standard Drawing 03370-1.
H. Smooth transitions shall be formed for pipes of different sizes, elevation and bends.

3.04 RISER AND CONE SECTIONS

A. Circular precast sections shall be provided with a double bead of preformed flexible joint sealant as specified in paragraph JOINT SEALANT between precast sections.
B. All protruding flexible joint sealant shall be removed from inside of manhole and the joint shall be wiped with non-shrink grout - ConShield Joint Set (see paragraph 2.11).
C. Internal or external manhole joint seals shall be installed per manufacturer's recommendation.
D. Lifting notches in manhole walls shall be filled with non-shrink grout - ConShield Joint Set (see paragraph 2.11).

3.05 PIPE CONNECTIONS

A. Resilient Connectors:
   1. Resilient connectors shall be used for all pipe connections unless otherwise approved by the City.
   2. The connecting pipe shall be carefully adjusted to proper line and grade. Granular bedding material shall be compacted under the haunches and to the spring line of the pipe for a distance of at least 6 feet from the manhole wall and to the trench width.
   3. The pipe shall be installed in the resilient connector prior to backfilling outside the manhole and shall be resealed as required after completion of the manhole and backfill. All visible leakage shall be eliminated.
   4. The connecting pipe for installation with resilient connectors shall be plain end, square cut spigots and shall not protrude more than one inch inside the manhole wall.
   5. A clear distance of at least 1 inch from the end of each connecting pipe and around the pipe shall be provided when the concrete invert fill is installed or as recommended by the manufacturer of the resilient connector.
   6. After completion of the manhole installation, the box out shall be filled with mastic filler material, completely filling the space beneath the pipe and extending to at least the spring line. The filler material shall provide a smooth, uniform surface between the inside diameter of the pipe and manhole invert.
B. Grouted Connections:
   1. Grouted connections are not allowed unless approved by the City.
   2. The space between connecting piping and the wall of the precast sections shall be completely filled with non-shrink grout.
   3. The maximum allowable pipe opening on a horizontal axis shall be the outside diameter of the pipe plus twelve (12) inches.
   4. The maximum allowable pipe opening on a vertical axis shall be the outside diameter plus 8 inches.
   5. The minimum clearance between the outside surface of the installed pipe and the concrete of the manhole shall be two (2) inches.
   6. The minimum distance between any two adjacent pipes shall be twelve (12) inches.
   7. For field alterations approved by the City/Design Professional, the walls shall be scored with a masonry saw to a depth sufficient to sever the reinforcing steel. A chipping hammer may then be used to remove the concrete.

3.06 MANHOLE TOP

A. The finished top elevation of manhole castings shall conform to the following unless otherwise shown on the Drawings or directed by the City/Design Professional.
   1. In paved areas, the top of the casting shall conform to the slope of the pavement and shall match the finished pavement elevation as shown in Standard Drawing 03370-4.
   2. In non-pavement areas, the top of the casting shall be not more than one (1) inch above the surrounding ground.
   3. In remote non-paved areas such as along creeks, open fields or wooded areas, the top of the casting shall be eighteen (18) inches above finish grade. Place soil around the casting with a maximum slope of 2 feet vertical to 1 foot horizontal to protect the external manhole seal.

3.07 FRAMES AND CHIMNEYS

A. All manholes shall be constructed with an external frame chimney seal as shown on Standard Drawing 03370-1 and as specified herein.

3.08 GRADE RING LINERS

A. All manholes constructed in paved areas shall be installed with a grade ring liner.

3.09 MANHOLE ADJUSTMENT

A. Adjust as shown in Standard Drawing 03370-5.
B. All manholes will shall be provided with adjustment ring(s) to facilitate adjustment:
   1. The manhole shall be provided with adjustment ring. The minimum adjustment for lowering the top of the manhole is 4 inches.
   2. The maximum adjustment for raising the top of the manhole is 12 inches.
C. If the top of an existing manhole is required to be raised to an elevation which will exceed twelve (12) inches or lowered more than the adjustment rings will allow, all vertical adjustments shall be made to the barrel of the manhole.
D. The joints shall be sealed with a double bead preformed flexible joint sealant as specified in 2.04.

3.10 MANHOLE TESTING.

A. The Contractor shall visually verify the absence of leaks and perform a vacuum test, on manholes that have inlet and outlet pipes of less than 42 inches in diameter, in accordance with Section 02702 -Sewer Pipe and Manhole Testing.

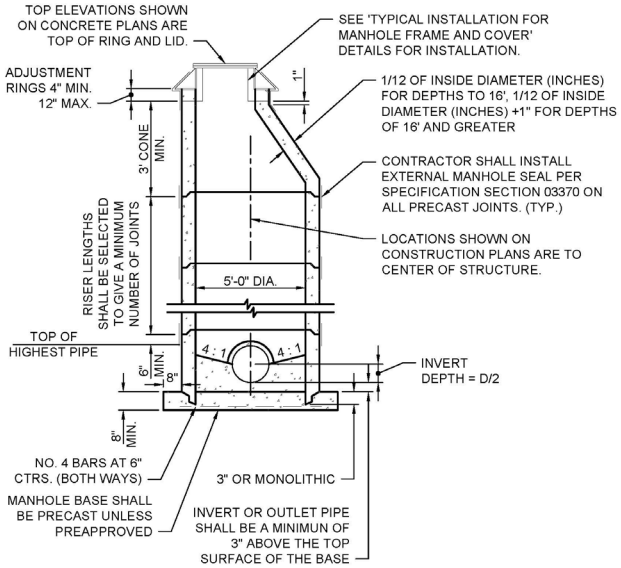

STANDARD PRECAST MANHOLE - (ECCENTRIC CONE)

SCALE: NTS

NOTES:

1. CLEARANCE TOLERANCE OF PIPE OPENINGS; THE MAXIMUM ALLOWABLE PIPE OPENING ON A HORIZONTAL AXIS SHALL BE THE OUTSIDE DIAMETER OF THE PIPE PLUS 12". THE MAXIMUM ALLOWABLE PIPE OPENING ON VERTICAL AXIS SHALL BE THE OUTSIDE DIAMETER PLUS 8". THE MINIMUM CLEARANCE BETWEEN THE OUTSIDE SURFACE OF AN INSTALLED PIPE AND THE CONCRETE OF THE MANHOLE SHALL BE 2".
2. INSTALLATION OF PIPE OPENINGS: ALL REQUIRED PIPE OPENINGS SHALL BE PLANT CAST IN MANHOLE UNITS. FIELD ALTERATIONS WITH A MASONRY SAW TO A DEPTH SUFFICIENT TO SEVER REINFORCED STEEL. A CHIPPING HAMMER MAY THEN BE USED TO REMOVE THE CONCRETE. MINIMUM DISTANCE BETWEEN ANY TWO ADJACENT PIPES SHALL BE 4".
3. NO DIRECT PAYMENT FOR SHAPING FLOOR OR CONNECTING PIPES AS SHOWN ON PLANS.
4. REFER TO STANDARD SPECIFICATION 05010 - SANITARY SEWER MANHOLE CASTINGS FOR FRAME AND COVER INFORMATION.
5. SANITARY SEWER MANHOLES SHALL BE COATED AND CONFORM TO SECTION 03370 - SANITARY SEWER MANHOLE CONSTRUCTION.

DO NOT SCALE THESE DRAWINGS FOR DIMENSIONS OR CLEARANCES. ANY QUESTIONS REGARDING DIMENSIONS SHALL BE BROUGHT TO THE ATTENTION OF THE CITY PRIOR TO CONSTRUCTION.

NO.	DATE	BY	NATURE

REVISIONS

STANDARD 60" PRECAST MANHOLE

WATER SERVICES
CITY OF KANSAS CITY, MISSOURI
DRAWING NO. 03370-1
DEVELOPED BY: --- APPROVED BY: ---
TECHNICAL ADVISORY COMMITTEE DATE: ---
1 OF 1

Standard Drawing 03370-1

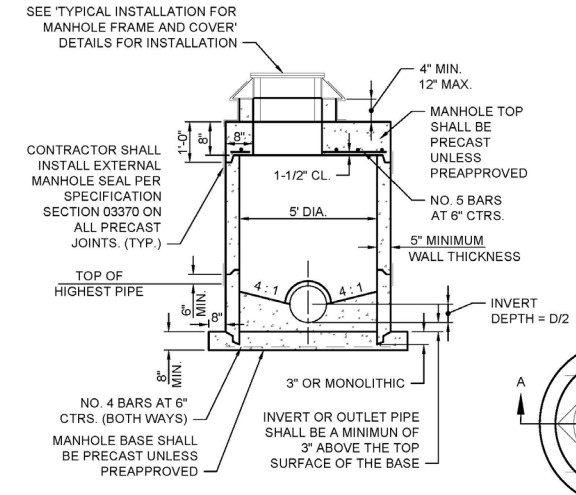

SECTION A

STANDARD PRECAST MANHOLE - (SHALLOW TYPE)

SCALE: NTS

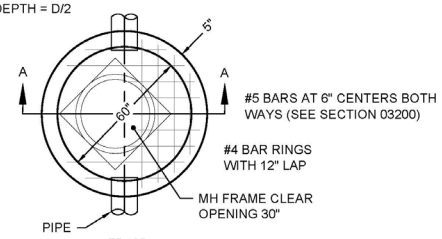

PLAN

SCALE: NTS

NOTES:

1. CLEARANCE TOLERANCE OF PIPE OPENINGS; THE MAXIMUM ALLOWABLE PIPE OPENING ON A HORIZONTAL AXIS SHALL BE THE OUTSIDE DIAMETER OF THE PIPE PLUS 12". THE MAXIMUM ALLOWABLE PIPE OPENING ON VERTICAL AXIS SHALL BE THE OUTSIDE DIAMETER PLUS 8". THE MINIMUM CLEARANCE BETWEEN THE OUTSIDE SURFACE OF AN INSTALLED PIPE AND THE CONCRETE OF THE MANHOLE SHALL BE 2".
2. INSTALLATION OF PIPE OPENINGS: ALL REQUIRED PIPE OPENINGS SHALL BE PLANT CAST IN MANHOLE UNITS. FIELD ALTERATIONS WITH A MASONRY SAW TO A DEPTH SUFFICIENT TO SEVER REINFORCED STEEL. A CHIPPING HAMMER MAY THEN BE USED TO REMOVE THE CONCRETE. MINIMUM DISTANCE BETWEEN ANY TWO ADJACENT PIPES SHALL BE 4".
3. NO DIRECT PAYMENT FOR SHAPING FLOOR OR CONNECTING PIPES AS SHOWN ON PLANS.
4. REFER TO STANDARD SPECIFICATION 05010 - SANITARY SEWER MANHOLE CASTINGS FOR FRAME AND COVER INFORMATION.
5. SANITARY SEWER MANHOLES SHALL BE COATED AND CONFORM TO SECTION 03370 - SANITARY SEWER MANHOLE CONSTRUCTION.

DO NOT SCALE THESE DRAWINGS FOR DIMENSIONS OR CLEARANCES. ANY QUESTIONS REGARDING DIMENSIONS SHALL BE BROUGHT TO THE ATTENTION OF THE CITY PRIOR TO CONSTRUCTION.

NO.	DATE	BY	NATURE

REVISIONS

STANDARD PRECAST MANHOLE SHALLOW TYPE

WATER SERVICES
CITY OF KANSAS CITY, MISSOURI
DRAWING NO. 03370-2
DEVELOPED BY: --- APPROVED BY: ---
TECHNICAL ADVISORY COMMITTEE DATE: ---
1 OF 1

Standard Drawing 03370-2

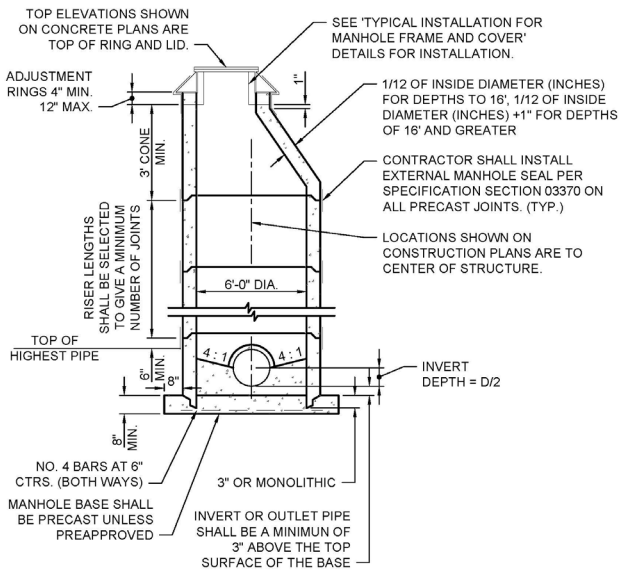

STANDARD 72" PRECAST MANHOLE - (ECCENTRIC CONE)

SCALE: NTS

NOTES:

1. CLEARANCE TOLERANCE OF PIPE OPENINGS: THE MAXIMUM ALLOWABLE PIPE OPENING ON A HORIZONTAL AXIS SHALL BE THE OUTSIDE DIAMETER OF THE PIPE PLUS 12". THE MAXIMUM ALLOWABLE PIPE OPENING ON VERTICAL AXIS SHALL BE THE OUTSIDE DIAMETER PLUS 8". THE MINIMUM CLEARANCE BETWEEN THE OUTSIDE SURFACE OF AN INSTALLED PIPE AND THE CONCRETE OF THE MANHOLE SHALL BE 2".
2. INSTALLATION OF PIPE OPENINGS: ALL REQUIRED PIPE OPENINGS SHALL BE PLANT CAST IN MANHOLE UNITS. FIELD ALTERATIONS WITH A MASONRY SAW TO A DEPTH SUFFICIENT TO SEVER REINFORCED STEEL. A CHIPPING HAMMER MAY THEN BE USED TO REMOVE THE CONCRETE. MINIMUM DISTANCE BETWEEN ANY TWO ADJACENT PIPES SHALL BE 4".
3. NO DIRECT PAYMENT FOR SHAPING FLOOR OR CONN ECTING PIPES AS SHOWN ON PLANS.
4. REFER TO STANDARD SPECIFICATION 05010 - SANITARY SEWER MANHOLE CASTINGS FOR FRAME AND COVER INFORMATION.
5. SANITARY SEWER MANHOLES SHALL BE COATED AND CONFORM TO SECTION 03370 - SANITARY SEWER MANHOLE CONSTRUCTION.

DO NOT SCALE THESE DRAWINGS FOR DIMENSIONS OR CLEARANCES. ANY QUESTIONS REGARDING DIMENSIONS SHALL BE BROUGHT TO THE ATTENTION OF THE CITY PRIOR TO CONSTRUCTION.

NO.	DATE	BY	NATURE

REVISIONS

STANDARD 72"
PRECAST MANHOLE

WATER SERVICES
CITY OF KANSAS CITY, MISSOURI
DRAWING NO. 03370-3

DEVELOPED BY: ---
APPROVED BY: ---
TECHNICAL ADVISORY COMMITTEE
DATE: ---

1 OF 1

Standard Drawing 03370-3

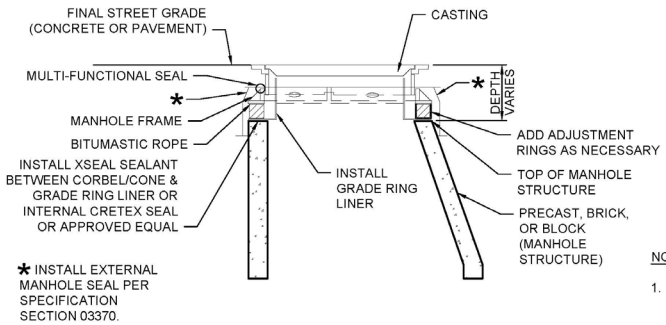

NOTES:

1. REFER TO STANDARD SPECIFICATION SECTIONS 03370 - SANITARY SEWER MANHOLE CONSTRUCTION AND 05010 - SANITARY SEWER MANHOLE CASTINGS FOR PRODUCTS AND EXECUTION.

TYPICAL INSTALLATION FOR MANHOLE FRAME & COVER
IN PAVED STREETS (ADJUSTABLE) /SELF LEVELING

SCALE: NTS

DO NOT SCALE THESE DRAWINGS FOR DIMENSIONS OR CLEARANCES. ANY QUESTIONS REGARDING DIMENSIONS SHALL BE BROUGHT TO THE ATTENTION OF THE CITY PRIOR TO CONSTRUCTION.

NO.	DATE	BY	NATURE

REVISIONS

TYP. INSTALL. FOR MANHOLE FRAME & COVER PRECAST
MANHOLE IN PAVED STREETS (ADJUSTABLE) /SELF LEVELING

WATER SERVICES
CITY OF KANSAS CITY, MISSOURI
DRAWING NO. 03370-4

DEVELOPED BY: ---
APPROVED BY: ---
TECHNICAL ADVISORY COMMITTEE
DATE: ---

1 OF 1

Standard Drawing 03370-4

MANHOLE GRADE ADJUSTMENT:

1. CONTRACTOR TO FIELD VERIFY ACTUAL "H" TO RAISE MANHOLE TO GRADE.
2. MANHOLE SHALL BE THOROUGHLY CLEANED AND LOOSE DEBRIS REMOVED PRIOR TO BEGINNING REHABILITATION. CONTRACTOR SHALL PLACE COVERS OVER INVERTS AS NEEDED TO PROTECT FLOW LINE.

TYPE A: "H" PLUS EXISTING CHIMNEY GREATER THAN 12"

1. EXCAVATE MANHOLE TO 1 FT. BELOW CORBEL/WALL JOINT. REMOVE FRAME AND COVER. CLEAN AND STOCKPILE FOR REUSE.
2. LIFT CORBEL TO REMOVE FROM WALL SECTION.
3. ADD PRECAST WALL SECTIONS AND CORBEL ECCENTRIC CONE/FLATTOP ONLY TO BRING MANHOLE TO GRADE. FOR BRICK MANHOLES SEE 'TYPICAL REBUILDING EXISTING MANHOLE FOR RAISING MANHOLES TO GRADE' DETAIL.
4. CASTINGS SHALL BE CLEANED PRIOR TO REINSTALLATION, IF APPROVED BY ENGINEER.
5. REINSTALL CASTINGS AND COMPLETE FRAME SEAL. INSTALL NEW CASTINGS AND FRAME SEAL IF REQUIRED.

TYPE B: "H" PLUS EXISTING CHIMNEY LESS THAN OR EQUAL TO 12"

1. EXCAVATE MANHOLE TO 1 FT. BELOW CORBEL/WALL JOINT. REMOVE FRAME AND COVER. CLEAN AND STOCKPILE FOR REUSE.
2. ADD HDPE OR PRO-RINGS TO BRING MANHOLE TO GRADE.
3. CASTINGS SHALL BE CLEANED PRIOR TO REINSTALLATION, IF APPROVED BY ENGINEER.
4. REINSTALL CASTINGS AND COMPLETE FRAME SEAL. INSTALL NEW CASTINGS AND FRAME SEAL IF REQUIRED. INSTALL GRADE RING LINER IN PAVED AREAS.

* CONTRACTOR SHALL INSTALL JOINT SEALS PER SPECIFICATION 03370 ON ALL JOINTS ON GRADE ADJUSTMENTS.

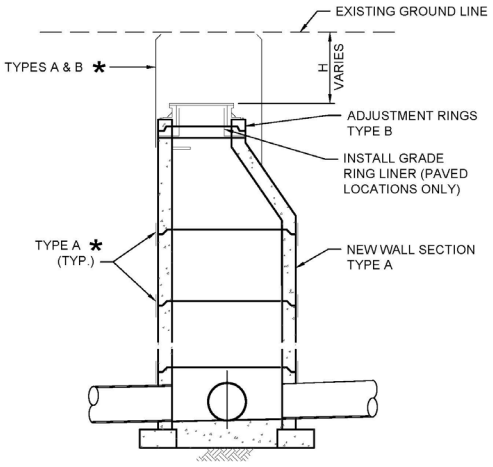

MANHOLE GRADE ADJUSTMENT
SCALE: NTS

DO NOT SCALE THESE DRAWINGS FOR DIMENSIONS OR CLEARANCES. ANY QUESTIONS REGARDING DIMENSIONS SHALL BE BROUGHT TO THE ATTENTION OF THE CITY PRIOR TO CONSTRUCTION.

NO.	DATE	BY	NATURE

REVISIONS

MANHOLE
GRADE ADJUSTMENT

WATER SERVICES
CITY OF KANSAS CITY, MISSOURI
DRAWING NO. 03370-5
DEVELOPED BY: ---
APPROVED BY: ---
TECHNICAL ADVISORY COMMITTEE
DATE: ---
1 OF 1

Standard Drawing 03370-5

END OF SECTION

SECTION 03608 – CONCRETE VAULTS

PART 1 - GENERAL

1.01 SUMMARY

A. This section provides for the installation of vaults to house water main appurtenances in locations shown on the drawings.
B. This section includes Concrete Vaults, Lids and Frames, and Vault Configuration.

1.02 SPECIFICATION MODIFICATIONS

A. It is understood that throughout this section these Specifications may be modified by appropriate items in Section 01015 – Specific Project Requirements, or as otherwise indicated on the Contract Drawings.

1.03 RELATED SECTIONS

A. Section 01000 – General Project Requirements.
B. Section 01015 – Specific Project Requirements.
C. Section 01300 – Submittals.
D. Section 02200 – Earthwork.
E. Section 02250 – Trenching, Pipe Embedment and Backfill.
F. Section 03000 – Miscellaneous Concrete.
G. Section 05012 – Water Castings.

1.04 CODES AND STANDARDS

A. The publications listed below form a part of this specification to the extent referenced. The publications are referred to within the text by the basic designation only.
B. American Society for Testing and Materials (ASTM):

ASTM C109	Standard Test Method for Compressive Strength of Hydraulic Cement Mortars.
ASTM C150	Standard Specification for Portland Cement.
ASTM C191	Standard Test Methods for Time of Setting of Hydraulic Cement by Vicat Needle.
ASTM C207	Standard Specification for Hydrated Lime for Masonry Purposes.
ASTM C478	Precast Reinforced Concrete Manhole Sections.
ASTM C827	Standard Test Method for Change in Height at Early Ages of Cylindrical Specimens of Cementitious Mixtures.
ASTM C990	Standard Specification for Joints for Concrete Pipe, Manholes, and Precast Box Sections Using Preformed Flexible Joint Sealants.
ASTM C1170	Standard Test Method for Determining Consistency and Density of Roller-Compacted Concrete Using a Vibrating Table.

C. International Masonry Industry All-Weather Council (IMIAC): Recommended Practices and Guide Specification for Cold Weather Masonry Construction.

1.05 DEFINITIONS

A. Paved Areas: Areas for which the final surfacing will be street pavement, shoulders, driveways, parking lots, curbs, gutters, sidewalks, gravel roads, or other surface construction or structures.

B. Unpaved Areas: Areas for which the final surfacing will be in a greenspace.

1.06 INFORMATION PROVIDED BY THE CITY

A. As provided in the contract documents.

1.07 SUBMITTALS

A. Submit as specified in Section 01300 – Submittals.

B. Shop Drawings:

1. Submit for approval general arrangement drawings showing vault size, height and location of access cover, steps, and all pipe penetrations.
2. Submit for approval joint construction details.
3. Submit for approval details on reinforcement if requested.
4. Submit for approval detail on vault frame lid.
5. Submit design calculations certifying load requirements specified herein.

C. Product Data:

1. Submit for review and approval manufacturer's catalogue/product data and installation instructions for the following:
   (a) Adjustment rings.
   (b) Joint sealant.

D. Other Submittals:

1. Precast concrete mix design.
2. Compressive testing of cylinders (as specified).
3. Compressive testing of cores (as specified).

1.08 QUALITY ASSURANCE

A. The Contractor is responsible for the quality assurance and quality control of the Work.

B. The manufacturer shall be a company specializing in manufacturing Products specified in this Section with a minimum of three years documented experience.

C. Cold Weather Requirements: IMIAC - Recommended Practices and Guide Specifications for Cold Weather Masonry Construction.

1.09 PRODUCT DELIVERY, STORAGE AND HANDLING

A. Follow the provisions for the delivery, storage and handling of products to and at site provided in Section 01000 – General Project Requirements.

B. Cement, Aggregate, and Reinforcement shall be in accordance with Section 03000 – Miscellaneous Concrete.

C. Handle materials and other accessories in such manner as to ensure delivery to the trench in sound undamaged condition.

D. Non-shrink grout: Deliver Materials to project in Manufacturer's original, unopened packaging, with labels clearly identifying product name, Manufacturer, and expiration date. Store grout in a cool, dry place, out of the sun.

E. Precast concrete sections shall not be delivered to the job until the concrete control cylinders have attained a strength of at least 80 percent of the specified minimum.

F. Precast concrete sections shall be handled carefully and shall not be bumped or dropped. Hooks shall not be permitted to come in contact with joint sections.
G. Precast concrete sections shall be inspected when delivered. All cracked, or otherwise visibly defective units will be rejected. City reserves the right to inspect the production of the units at the manufacturing plant.

1.10 VAULT CONFIGURATION

A. Precast Concrete Vaults for potable water distribution systems shall conform to detail 03608-1 and shall meet the following requirements:
   1. Shaft Construction: Concentric with lipped male/female joints; sleeve to receive pipe.
   2. Shape: Cylindrical.
   3. Clear Inside Dimensions: 60-inch diameter, minimum
B. Clear Lid Opening: 30 inches diameter, minimum.
C. Pipe Entry: Provide openings as required.

1.11 VAULT LOADING REQUIREMENTS

A. Precast concrete vaults shall be designed to withstand the wheel loading requirements of AASHTO HS25. The contractor may request a variance for HS20 loading if the vault is located in greenspace.

PART 2 - PRODUCTS

2.01 PRECAST CONCRETE

A. Materials and Fabrication:
   1. Precast concrete shall conform to ASTM C478.
   2. Air entraining agents shall be added to the concrete to provide 4 to 6 percent entrained air.
   3. Submit for review and approval the precast concrete manufacture's mix design(s) for precast structures.
B. Quality Control:
   1. If indicated in Section 01015 – Specific Project Requirements, provide compressive testing results prepared by the precast concrete manufacturer.
      (a) Compressive Testing of Cylinders: Conduct in accordance with ASTM C478.
      (b) Compression Testing of Cores: Conduct in accordance with ASTM C478. Mortar.
C. Proportions by volume shall be one-part Portland cement, ASTM C150 Type I; two parts sand, ASTM C33; and 10 percent by volume of lime ASTM C207, Type S.

2.02 NON-SHRINK GROUT

A. Non-shrink grout shall conform to ASTM C1107, Grades B and C.
B. Non-shrink grout shall be in the plastic state and show no expansion after set as tested in accordance with ASTM C827 and shall develop compressive strength not less than three thousand (3,000) psi with a trowelable mix within twenty-four (24) hours per ASTM C109. The placement time shall be not less than forty-five (45) minutes based on initial set per ASTM C191.

2.03 FRAMES AND COVERS FOR CONCRETE VAULTS

A. Shall conform to Section 05012 – Water Castings.

2.04 GRANULAR BEDDING MATERIAL

A. Granular bedding material shall be as specified in Section 02250 – Trenching, Pipe Embedment and Backfill.

2.05 JOINT SEALANT

A. Joints shall be sealed using preformed flexible joint sealants conforming to ASTM C990. The minimum bead dimension shall be an inch.
B. Install in accordance with manufacturer's recommendations.

2.06 STEPS

A. Steps shall not be installed.

PART 3 - EXECUTION

3.01 EXCAVATION, BACKFILL AND COMPACTION

A. Excavation, backfill and compaction for concrete vaults shall be in accordance with Section 02200 –Earthwork.
B. Excavation, backfill and compaction operations shall be achieved in a suitable and orderly manner providing a minimum disturbance to the general public.
C. Depth of excavation shall be to that required for proper installation of the concrete vault. Over-depth excavation may be required if the subgrade is unsuitable or unstable. Over-depth excavation due to unsuitable or unstable subgrades shall be backfilled as required by the City. Over-depth excavation occurring through an oversight by the Contractor shall be backfilled as required by the City's Representative at no additional cost to the City.
D. Side clearance outside the manhole and/or structures shall be no greater than necessary to allow for forming, installation of piping, proper application of special coatings, and access for inspection.

3.02 CONCRETE VAULT BASE

A. The bottom precast wall section shall not be used for supporting or leveling the other wall sections prior to installing the base.
B. The subgrade materials shall be excavated to undisturbed earth and a uniform elevation to allow for a minimum of 6 inches and a maximum of 18 inches of granular bedding material. The surface of the granular material shall be carefully graded, and the base section accurately set so that pipes will be on proper line and grade. The elevation of the granular material shall be adjusted as required until proper grade and alignment of the concrete vault base has been attained.
C. No wedging or blocking under the precast reinforced concrete footers is permitted.

3.03 RISER SECTIONS

A. Circular precast sections shall be provided with a double bead of preformed flexible joint sealant as specified in paragraph JOINT SEALANT between precast sections.
B. All protruding flexible joint sealant shall be removed from inside of manhole and the joint shall be wiped with non-shrink grout.

C. Internal or external manhole joint seals shall be installed per manufacturer's recommendation.
D. Lifting notches in manhole walls shall be filled with non-shrink grout.

3.04 PIPE CONNECTIONS

A. Grouted Connections:
   1. The space between connecting piping and the wall of the precast sections shall be completely filled with non-shrink grout.
   2. The maximum allowable pipe opening on a horizontal axis shall be the outside diameter of the pipe plus twelve (12) inches.
   3. The maximum allowable pipe opening on a vertical axis shall be the outside diameter plus 8 inches.
   4. The minimum clearance between the outside surface of the installed pipe and the concrete of the manhole shall be two (2) inches.
   5. The minimum distance between any two adjacent pipes shall be four (4) inches.
   6. For field alternations approved by the City or City's Representative, walls shall be scored with a masonry saw to a depth sufficient to sever the reinforcing steel. A chipping hammer may then be used to remove the concrete.

3.05 CONCRETE VAULT TOP

A. The finished top elevation of casting shall conform to the following unless otherwise shown on the Drawings or directed by the City:
   1. In paved areas, the top of the casting shall conform to the slope of the pavement and be 1/8 inch below the finished pavement elevation.
   2. In non-pavement areas, the top of the casting shall be not more than one (1) inch above the surrounding ground.
   3. In remote unpaved areas such as open fields or wooded areas, the top of the casting shall be no less than six (6) inches and no more than eighteen (18) inches above the surrounding soil surface. Place soil around the casting with a maximum slope of 2 feet vertical to 1 foot horizontal to protect the external manhole seal.

3.06 PREPARATION

A. Coordinate placement of inlet and outlet pipe or sleeves required by other sections.

3.07 PLACING VAULT SECTIONS

A. Place precast reinforced concrete footers.
B. Place vault sections plumb, level and at correct elevations.
C. Set roof slab, adjust frame and cover level to final elevation.

3.08 CORROSION PROTECTION

A. When specified, provide corrosion protection for the concrete and concrete reinforcement.
B. Corrosion protection for concrete shall be required when the soil conditions indicate the need for sulfate resistant concrete and it is not available from the precast manufacturer.

DETAIL 03608-1 ON NEXT PAGE

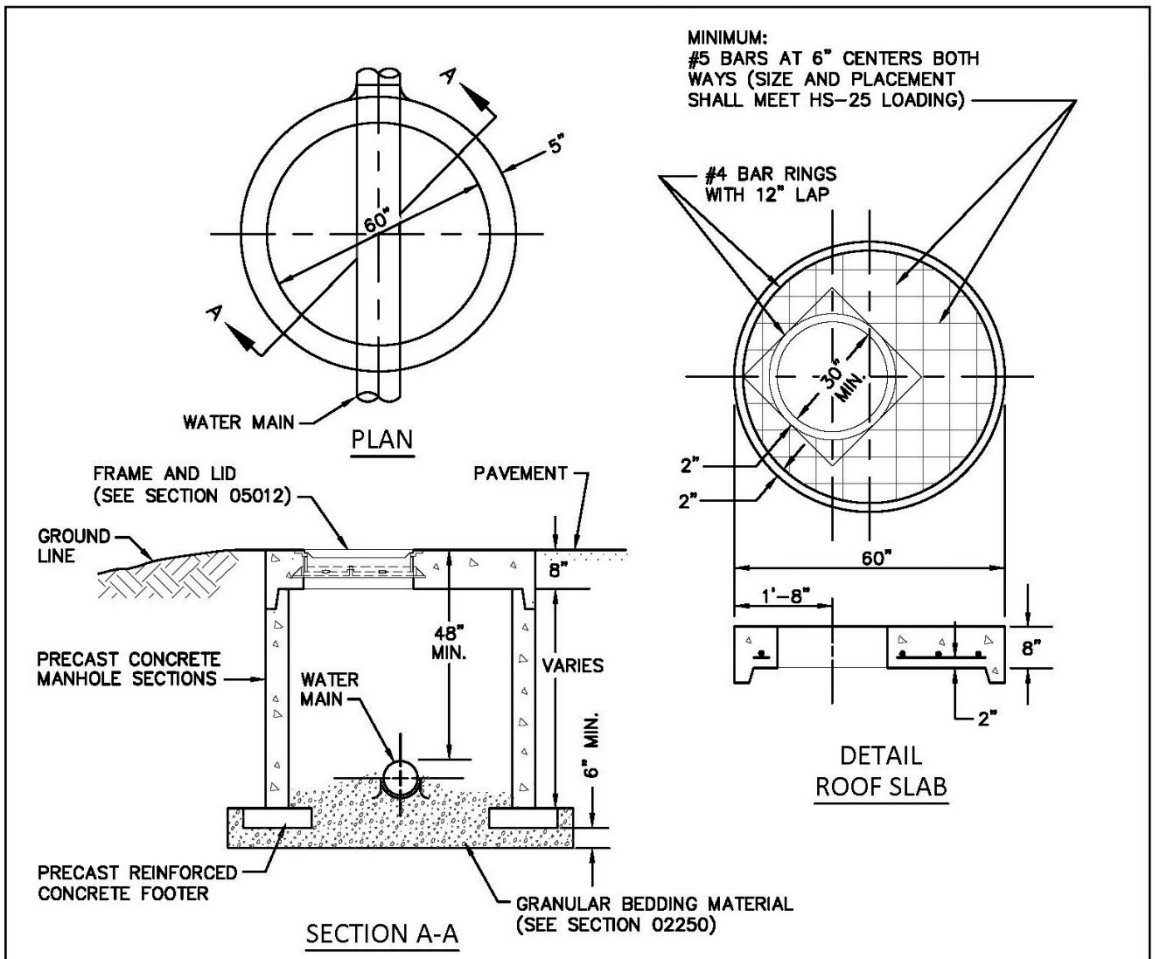

NOTES:

1. VAULT SHALL BE STANDARD 60" I.D. PRECAST CONCRETE MANHOLE USING A MINIMUM RISER OF 48 INCHES. ADDITIONAL RISERS MAY BE USED, IF NEEDED, TO ADJUST THE DEPTH OF THE VAULT.
2. FRAME AND LID: SEE SECTION 05012.

PRECAST CONCRETE VAULT

WATER SERVICES
CITY OF KANSAS CITY, MISSOURI
DRAWING NO. 03608-1

DEVELOPED BY: TECHNICAL ADVISORY COMMITTEE
APPROVED BY:
DATE: 1/19/2021

1 OF 1

END OF SECTION

SECTION 05010 – SANITARY SEWER MANHOLE CASTINGS

PART 1 - GENERAL

1.01 SUMMARY

A. This specification covers ductile iron castings for paved areas and composite castings for green spaces. All castings for manholes on sewer mains up to 48 inches in diameter shall have a clear opening of 30 inches.

1.02 DESCRIPTION

A. This specification is applicable for ductile iron castings and composite castings. Prior to the Contractor supplying castings, all manufacturers shall be approved suppliers and be able to demonstrate that there is an acceptable quality control program at the producing foundry and/or molding facility.

1.03 SPECIFICATION MODIFICATIONS

A. It is understood that throughout this section these Specifications may be modified by appropriate items in Section 01015 – Specific Project Requirements or as otherwise indicated on the Contract Drawings.

1.04 RELATED SECTIONS

A. Section 01300 – Submittals.
B. Section 01015 – Specific Project Requirements.
C. Section 03370 – Sanitary Sewer Manhole Construction.

1.05 CODES AND STANDARDS

A. The publications listed below form a part of this specification to the extent referenced. The publications are referred to within the text by the basic designation only. The version of the codes and standards in effect at the time of the Notice to Bidders shall be used, except as noted on the Drawings or in the Specific Project Requirements section of these specifications.
B. American Association of State Highway and Transportation Offices (AASHTO):
   AASHTO M306 (Latest Revision) – Drainage, Sewer, Utility, and Related Castings.
   Standard Specifications for Highway Bridges.
C. American Society for Testing and Materials (ASTM) International:

ASTM A536	Standard Specification for Ductile Iron Castings.
ASTM A615	Standard Specification for Deformed and Plain Carbon-Steel Bars for Concrete Reinforcement.
ASTM C478	Standard Specification for Precast Reinforced Concrete Manholes Sections.
ASTM D2240	Standard Test Method for Rubber Property – Durometer Hardness.
ASTM C501	Standard Testing for Wear and Abrasion.
ASTM G154	Standard Practice for Operating Fluorescent Ultraviolet (UV) Lamp Apparatus for Exposure of Nonmetallic Materials.
ASTM C1028	Standard Testing for Coefficient of Friction.

D. U.S. Environmental Protection Agency: Material Safety and Data Sheet.
E. Federal Register: 29 CFR 1910.1200 Hazard Communications.

F. Federal Standards:
   FED-STD-123 Marking for Domestic Shipment (Civilian Agencies).
G. United States Customs Service:
   Custom Regulation Chapter 1, Part 134, Article 19, U.S.C. 1304.

1.06 CONTACTOR SUBMITTALS

A. Submit the following in accordance with Section 01300:
   1. Certified shop drawings for all castings, product data, manufacturer's catalog cut sheets, specifications and installation details.
   2. Casting identification and location:
      (a) Iron Casting submittals shall include a certification of conformance in accordance with AASHTO M306 (Part 9, Certification).
      (b) Composite Frames and Cover submittals shall include a certification of conformance to proof-load testing section of AASTHO M306.
      (c) A foundry certification shall be furnished stating that samples representing each lot have been tested, inspected and are in accordance with this specification.
   3. A manufacturer's affidavit certifying that the castings furnished comply with the provisions of these specifications, regardless of whether or not the purchaser has an inspector at the plant.
   4. All submittals shall be approved by the City before castings are ordered by the Contractor.

1.07 QUALITY ASSURANCE

A. The Contractor is responsible for the quality assurance and quality control of the work.
B. The Manufacturer shall guarantee items to be free of defects.
C. Manufacturer shall have a quality control process in place and shall provide a copy of their "Quality Control Manual."
D. The manufacturer shall keep records of all tests, MSDS sheets, foundry, lot records, product liability insurance and any customs documentation control data for a period of 3 years. The supplier agrees to furnish copies of records within two weeks after the receipt of request for such records.

1.08 PRODUCT DELIVERY, STORAGE AND HANDLING

A. Check materials upon arrival. Identify and segregate as to types, functions, and sizes. Store materials off of the ground in a manner affording easy accessibility and not causing excessive rusting or coating with grease or other objectionable materials.
B. Unless otherwise specified on the purchase order, cleaning, preservation, and packaging of castings shall be in accordance with the manufacturer's commercial practice. Packing and marking shall also be adequate to ensure acceptance and safe delivery by the carrier for the mode of transportation employed.
C. If the number of the defective items exceeds two and one half percent of the lot, the purchaser will reject the remaining quantity in the lot and the supplier will redeliver the remaining quantity of the lot.
D. All castings shall be marked in accordance with the requirements of Federal Standard No. 123 and with Chapter 1, Part 134 of the United States Customs Service Regulations, including 19 U.S.C. 1304 paragraph, as applicable. Failure to conform to the above requirements will be just cause for rejection of castings.

PART 2 - PRODUCTS

2.01 DUCTILE IRON CASTINGS

A. Castings shall be manufactured and tested in accordance with ASTM A536 and AASHTO M306-10.

2.02 COMPOSITE FRAMES AND COVERS

A. Castings shall conform to the following standards:
   1. Composite frames and covers shall be manufactured from fiber reinforced polymer (FRP) and the color shall be black. Fiber reinforcement shall consist of fiberglass, carbon, aramid, basalt and/or natural fibers. The polymer matrix shall be thermoset consisting of a polyester, vinyl ester, epoxy, polyurethane and/or hybrid chemical composition.
   2. Cover shall have a gasket seal and two locking lugs made of stainless steel. The locking lugs shall be designed to lock under the seat of the frame. Lock lugs shall be actuated by a stainless-steel penta-head bolt. All metal hardware shall be 316 Stainless Steel.
   3. Proof Load Testing: Traffic service frames and covers shall have a first article proof load test conducted and the results of that proof load shall be made available to the purchaser upon request. The proof load shall be conducted in accordance with the method and procedure that is outlined in AASHTO M306. The product shall be tested on a suitable and calibrated load testing machine, the composite frame and cover shall hold a 50,000-pound proof load for one minute without experiencing any cracks or detrimental permanent deformation. During the load testing process visible cracking, visible cracks or delamination will be cause for rejection. When load is removed, Permanent Set (Deflection) of more than 1/8" (.125") measured at center of load area will be cause for rejection. All testing shall be conducted on a NIST calibrated and certified load test machine.
   4. Ultraviolet resistance: Cover shall meet ultraviolet requirements as defined in ASTM G154 (Cycle 1 for 1600 hours). Specimens shall be tested for ultimate flexural strength, retaining at least 75% of control values for load and deflection at failure.
   5. Coefficient of Friction: Static Coefficient of Friction of cover shall be 0.5 or greater, as described in ASTM C1028 Standard, in both wet and dry applications.
   6. Wear and Abrasion: Shall be tested in accordance with ASTM C501, Test shall be 1000 cycles of a H22 wheel with 1000g load. Wear Index is calculated 88/Weight Loss (grams). The four test cycle average shall have a calculated wear index of >300

2.03 WORKMANSHIP AND FINISH

A. Castings shall be of uniform quality, free from all defects, holes, shrinkage, cracks and any other surface defect. Ductile iron castings shall be ground smooth and well cleaned by shot blasting. Runners, risers, fins, and other cast-on pieces shall be removed.
B. As-cast dimensions may vary by one half the maximum shrinkage possessed by the metal or ± 1/16 in/ft.
C. As-cast weight may vary by ±5 percent from the drawing/specification weight.
D. For traffic service castings, bearing surfaces between manhole rings and covers or grates and frames shall be cast or machined with such precision to prevent rocking.

E. Circular manhole frames and covers shall be furnished with machined horizontal bearing surfaces unless otherwise specified in the standard details.
F. In other matters of workmanship and finish, the castings shall conform to any points agreed upon by the City and the manufacturer/supplier.

2.04 MANHOLE FRAMES AND COVERS

A. Frames and covers shall be as indicated and shall be of the type suitable for the application. The frames and covers shall be circular and the covers without vent holes. Covers located in the combined sewer system may have vent holes, see Section 01015 – Specific Project Requirements.
B. Markings – See Figure 1, Figure 2 and Figure 3 for approved markings at the end of this section.
C. The minimum clear opening shall be 30 inches for all 5.0 foot diameter manholes and 6.0 foot diameter manholes.
D. All covers shall have provisions for ease of opening, such as concealed pick holes.
E. Special Requirements for Paved Areas:
   1. Definition: Areas subject to vehicular traffic. Includes, but is not limited to, all paved areas.
   2. All frames and covers shall be "Traffic Rated" in accordance with AASHTO M306 (HS-25) Loading.
   3. All manhole frames and covers shall be adjustable and self- leveling. Frames and covers shall be adjustable to meet any slope and grade of the roadway (from 0 to 17%) and shall be able to be raised or lowered in ¼ inch increments, up to 2¼ inches. Ring height shall be adjustable after installation without disturbing the surrounding pavement.
   4. Cam Locks will not be allowed in traffic areas unless otherwise indicated in the contract documents or directed by the City. In traffic areas, the Contractor shall install NON-Cam Lock Castings.
   5. Acceptable manufactures include the following (or approved equal):
      (a) Hinged ErgoXL Self-Level Manhole Frame and Cover with Gasket Cover as manufactured by East Jordan.
      (b) PAMREX VIATOP (reference #CDVT6OQG) as manufactured by CertainTeed.
F. Special Requirements for Green Spaces/Un-Paved Areas:
   1. Definition: Areas that are not subject to vehicular traffic. Includes, but is not limited to, greenways and easements.
   2. All frames and covers shall be rated for AASHTO M306 (HS-25) Loading.
   3. Ductile iron covers shall be hinged with drain and incorporate 90 degree blocking system to prevent accidental closure.
   4. Flange shall incorporate bedding slots or bolt holes.
   5. Acceptable manufacturers include the following (or pre-approved equal):
      (a) Pamrex models as manufactured by CertainTeed.
      (b) ErgoXL as manufactured by East Jordan.
      (c) CAP as manufactured by Composite Access Products.
      (d) Durostreet as manufactured by East Jordan.
G. Special Requirements for Flood Plains:
   1. Definition: Areas that are in designated Flood Plains.
   2. All frames and covers shall be watertight.
   3. All frames and covers shall be rated for AASHTO M306 (HS-25) Loading.
   4. Flange shall incorporate bedding slots or bolt holes.

5. Stainless Steel bolts and nuts for lid shall be supplied with anti-seize coating.
6. Acceptable manufacturers include the following (or pre-approved equal):
   (a) CAP Bolt down as manufactured by Composite Access Products.

2.05 FRAME AND CHIMNEY SEALING SYSTEM

A. Per Section 03370 – Sanitary Sewer Manhole Construction.

PART 3 - EXECUTION

3.01 MANHOLE FRAMES AND COVERS

A. The Contractor shall coordinate the installation of the castings with the work of the other trades in order to avoid delays. Install inserts or anchors as required by individual items.
B. Install items as specified and in accordance with the manufacturer's instructions.
C. Install items plumb, level, in alignment and anchor securely. All manhole frames with hinged lids shall be anchored at four points.

3.02 CLEANING

A. Clean all items after installation to remove rust, dirt, oil, grease and other deleterious substances.
B. Clean all welds, bolted connections and abraded areas and apply the shop coating. Touch up damaged areas with the shop coating.

3.03 WARRANTY

A. All castings shall have a lifetime warranty against manufacture defects for all components.

Figure 1, Figure 2 and Figure 3 on pages 6, 7 and 8 respectively.

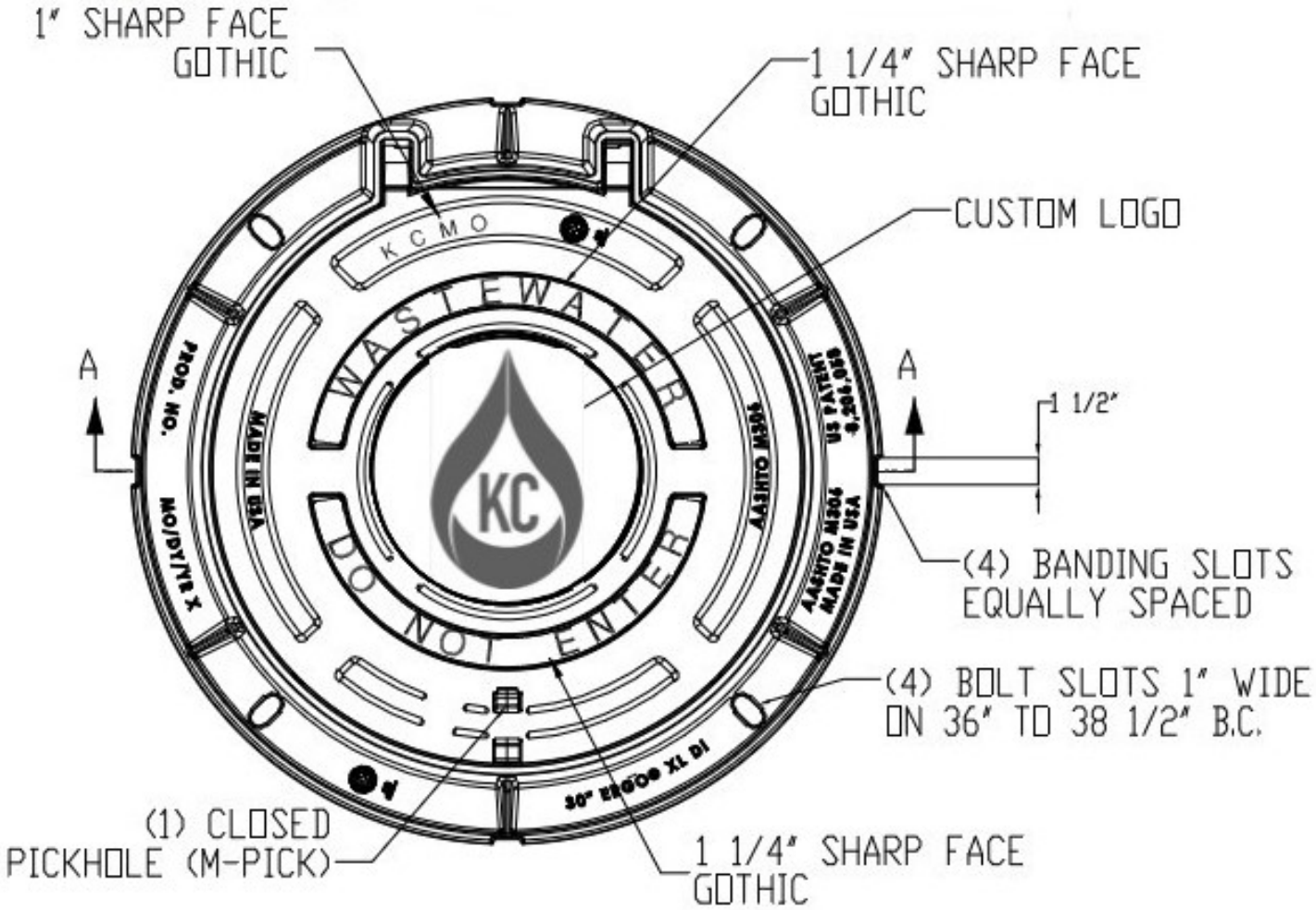

Figure 1: Standard Sanitary Sewer Manhole Markings
For Ductile Iron Castings

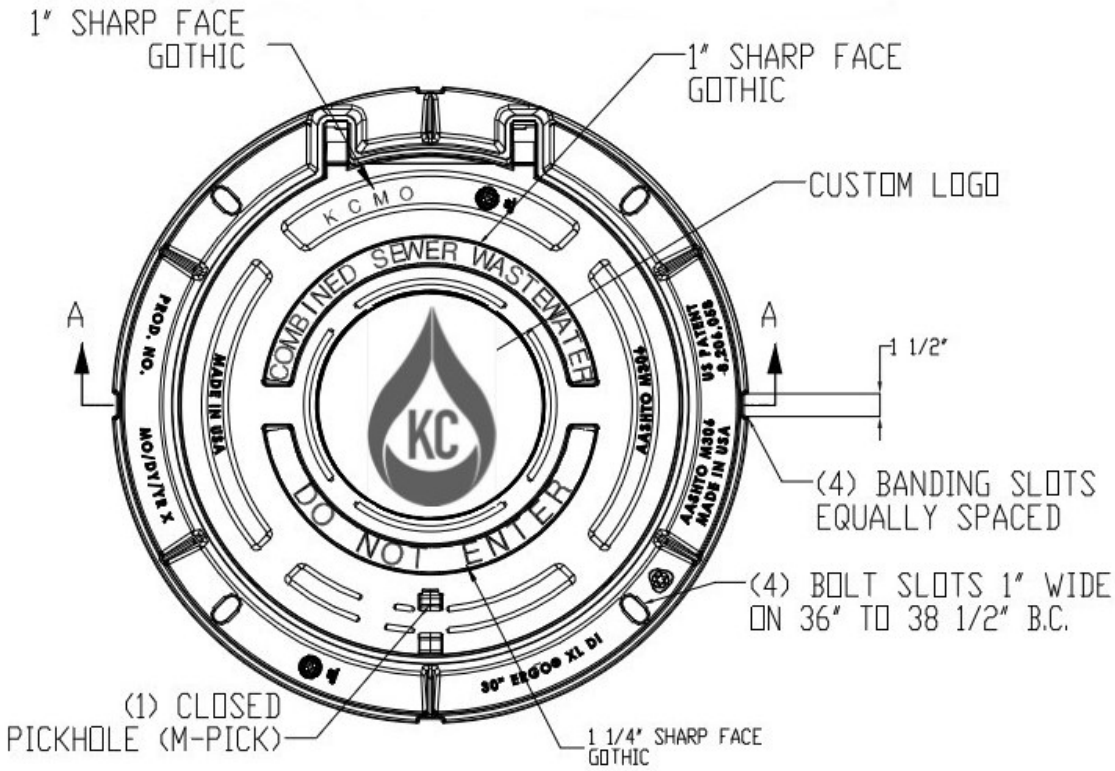

Figure 2: Optional Sanitary Sewer Manhole Markings
For Ductile Iron Castings
See Section 01015 – Specific Project Requirements

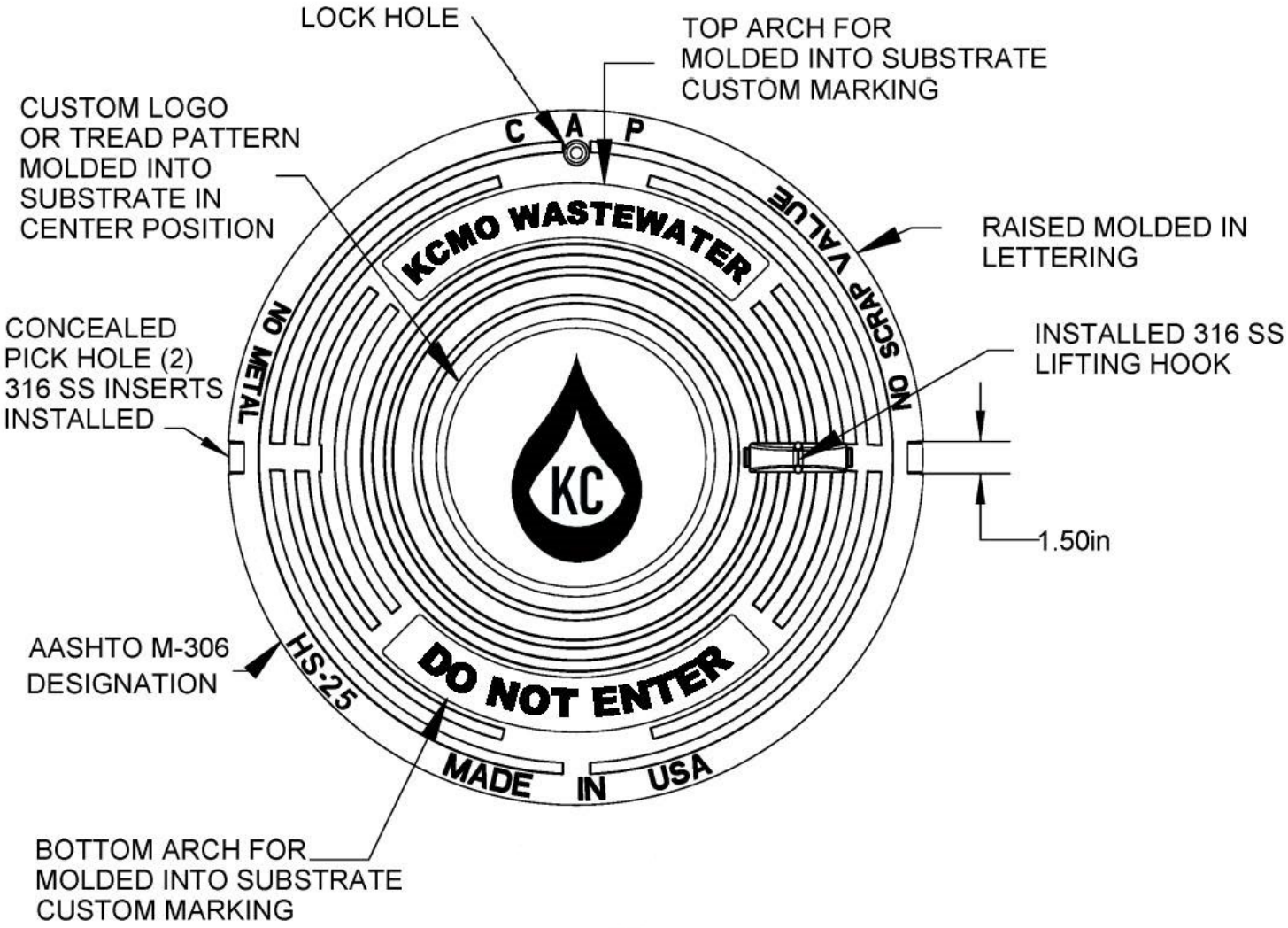

Figure 3: Standard Sanitary Sewer Manhole Markings
For Composite Castings

END OF SECTION

SECTION 05011 – STORMWATER CASTINGS

PART 1 - GENERAL

1.01 SUMMARY

A. This specification covers ductile iron castings for stormwater structures. Unless otherwise specified, all castings for stormwater structures shall have a clear opening of 30 inches and hinged covers.

1.02 DESCRIPTION

A. This specification is for stormwater ductile iron castings. Prior to the Contractor supplying castings, all manufacturers shall be approved as suppliers for the City of Kansas City, Missouri (City) and shall be able to demonstrate that there is an acceptable quality control program at the producing foundry.

1.03 SPECIFICATION MODIFICATIONS

A. It is understood that throughout this section these Specifications may be modified by appropriate items in Section 01015 – Specific Project Requirements or as otherwise indicated on the Contract Drawings.

1.04 RELATED SECTIONS

A. Section 01015 – Specific Project Requirements.
B. Section 01300 – Submittals.
C. Section 03370 – Sanitary Sewer Manhole Construction.

1.05 CODES AND STANDARDS

A. The publications listed below form a part of this specification to the extent referenced. The publications are referred to within the text by the basic designation only. The version of the codes and standards in effect at the time of the Notice to Bidders shall be used, except as noted on the Drawings or in the Specific Project Requirements section of these specifications.
B. American Association of State Highway and Transportation Offices (AASHTO):
   AASHTO M306 (Latest Revision) – Drainage, Sewer, Utility, and Related Castings.
   Standard Specifications for Highway Bridges**.**
C. American Society for Testing and Materials (ASTM) International:

ASTM A536	Standard Specification for Ductile Iron Castings.
ASTM A615	Standard Specification for Deformed and Plain Carbon-Steel Bars for Concrete Reinforcement.
ASTM C478	Standard Specification for Precast Reinforced Concrete Manholes Sections.

D. U.S. Environmental Protection Agency: Material Safety and Data Sheet.
E. Federal Register: 29 CFR 1910.1200 Hazard Communications.
F. Federal Standards:
   FED-STD-123 Marking for Domestic Shipment (Civilian Agencies).
G. United States Customs Service:
   Custom Regulation Chapter 1, Part 134, Article 19, U.S.C. 1304.

1.06 CONTACTOR SUBMITTALS

A. Submit the following in accordance with Section 01300 – Submittals:
   1. Certified shop drawings for all castings, product data, manufacturer's catalog cut sheets, specifications and installation details.
   2. Casting identification and location:
      (a) Iron Casting submittals shall include a certification of conformance in accordance with AASHTO M306 (Part 9, Certification) and HS-25 loading.
      (b) A foundry certification shall be furnished stating that samples representing each lot have been tested, inspected and are in accordance with this specification.
   3. A manufacturer's affidavit certifying that the furnished castings comply with the provisions of these specifications, regardless of whether or not the purchaser has an inspector at the plant.
   4. All submittals shall be approved by the City before castings are ordered by the Contractor.

1.07 QUALITY ASSURANCE

A. The Contractor is responsible for the quality assurance and quality control of the work.
B. The Manufacturer shall guarantee items to be free of defects.
C. Manufacturer shall have a quality control process in place and shall provide a copy of their "Quality Control Manual."
D. The manufacturer shall keep records of all tests, MSDS sheets, foundry, lot records, product liability insurance and any customs documentation control data for a period of 3 years. The supplier agrees to furnish copies of records within two weeks after the receipt of request for such records.

1.08 PRODUCT DELIVERY, STORAGE AND HANDLING

A. Check materials upon arrival. Identify and segregate as to types, functions, and sizes. Store materials off of the ground in a manner affording easy accessibility and not causing excessive rusting or coating with grease or other objectionable materials.
B. Unless otherwise specified on the purchase order, cleaning, preservation, and packaging of castings shall be in accordance with the manufacturer's commercial practice. Packing and marking shall also be adequate to ensure acceptance and safe delivery by the carrier for the mode of transportation employed.
C. If the number of the defective items exceeds two and one half percent of the lot, the purchaser will reject the remaining quantity in the lot and the supplier will redeliver the remaining quantity of the lot.
D. All castings shall be marked in accordance with the requirements of Federal Standard No. 123 and with Chapter 1, Part 134 of the United States Customs Service Regulations, including 19 U.S.C. 1304 paragraph, as applicable. Failure to conform to the above requirements will be just cause for rejection of castings.

PART 2 - PRODUCTS

2.01 DUCTILE IRON CASTINGS

A. Castings shall be manufactured and tested in accordance with ASTM A536 and AASHTO M306-10 HS-25 loading.

2.02 WORKMANSHIP AND FINISH

A. Castings shall be of uniform quality, free from all defects, holes, shrinkage, cracks and any other surface defect. Ductile iron castings shall be ground smooth and well cleaned by shot blasting. Runners, risers, fins, and other cast-on pieces shall be removed.
B. As-cast dimensions may vary by one half the maximum shrinkage possessed by the metal or ± 1/16 in/ft.
C. As-cast weight may vary by ±5 percent from the drawing/specification weight.
D. For traffic service castings, bearing surfaces between manhole rings and covers or grates and frames shall be cast or machined with such precision to prevent rocking.
E. Circular manhole frames and covers shall be furnished with machined horizontal bearing surfaces unless otherwise specified in the standard details.
F. In other matters of workmanship and finish, the castings shall conform to any points agreed upon by the City and the manufacturer/supplier.

2.03 MANHOLE FRAMES AND COVERS

A. Frames and covers shall be as specified and shall be of the type suitable for the application. The frames and covers shall be circular and the covers with vent holes.
B. Markings – See Figure 1 at the end of this section for approved markings.
C. The minimum clear opening shall be 30 inches for all castings for stormwater structures.
D. All covers shall have provisions for ease of opening, such as concealed pick holes.
E. All frames and covers shall be "Traffic Rated" in accordance with AASHTO M306 HS-25 Loading.
F. Unless specified in Section 01015 – Specific Project Requirements or noted on the contract drawings, cam locks are not required.
G. Special Requirements for Paved Areas:
    1. Definition: Areas subject to vehicular traffic. Includes, but is not limited to, all paved areas.
    2. All manhole frames and covers shall be adjustable and self- leveling. Frames and covers shall be adjustable to meet any slope and grade of the roadway (from 0 to 17 percent) and shall be able to be raised or lowered in ¼ inch increments, up to 2¼ inches. Ring height shall be adjustable after installation without disturbing the surrounding pavement.
    3. Acceptable manufactures include the following (or approved equal):
        (a) Hinged ErgoXL Self-Level Manhole Frame and Cover with Gasket Cover as manufactured by East Jordan.
        (b) PAMREX VIATOP (reference #CDVT6OQG) as manufactured by CertainTeed.
H. Special Requirement for Curb Inlets, Green Spaces and Un-Paved Areas:
    1. Areas that are not normally subject to vehicular traffic. Includes, but is not limited to, greenways, easements and curb inlets.
    2. Ductile iron covers shall be hinged with drain holes and incorporate 90 degree blocking system to prevent accidental closure.
    3. Flange shall incorporate bedding slots or bolt holes except castings for curb inlets.
    4. Acceptable manufacturers include the following (or pre-approved equal):
        (a) Pamrex models as manufactured by CertainTeed.
        (b) ErgoXL as manufactured by East Jordan.
        (c) ErgoXL TF as manufactured by East Jordan.

2.04 FRAME AND CHIMNEY SEALING SYSTEM

A. Per Section 03370 – Sanitary Sewer Manhole Construction.

PART 3 - EXECUTION

3.01 MANHOLE FRAMES AND COVERS

A. The Contractor shall coordinate the installation of the castings with the work of the other trades in order to avoid delays. Install inserts or anchors as required by individual items.
B. Install items as specified and in accordance with the manufacturer's instructions.
C. Install items plumb, level, in alignment and anchor securely. All manhole frames with hinged lids shall be anchored at four points.

3.02 CLEANING

A. Clean all items after installation to remove rust, dirt, oil, grease and other deleterious substances.
B. Clean all welds, bolted connections and abraded areas and apply the shop coating. Touch up damaged areas with the shop coating.

3.03 WARRANTY

A. All castings shall have a lifetime warranty against manufacture defects for all components.

Figure 1 on page 5.

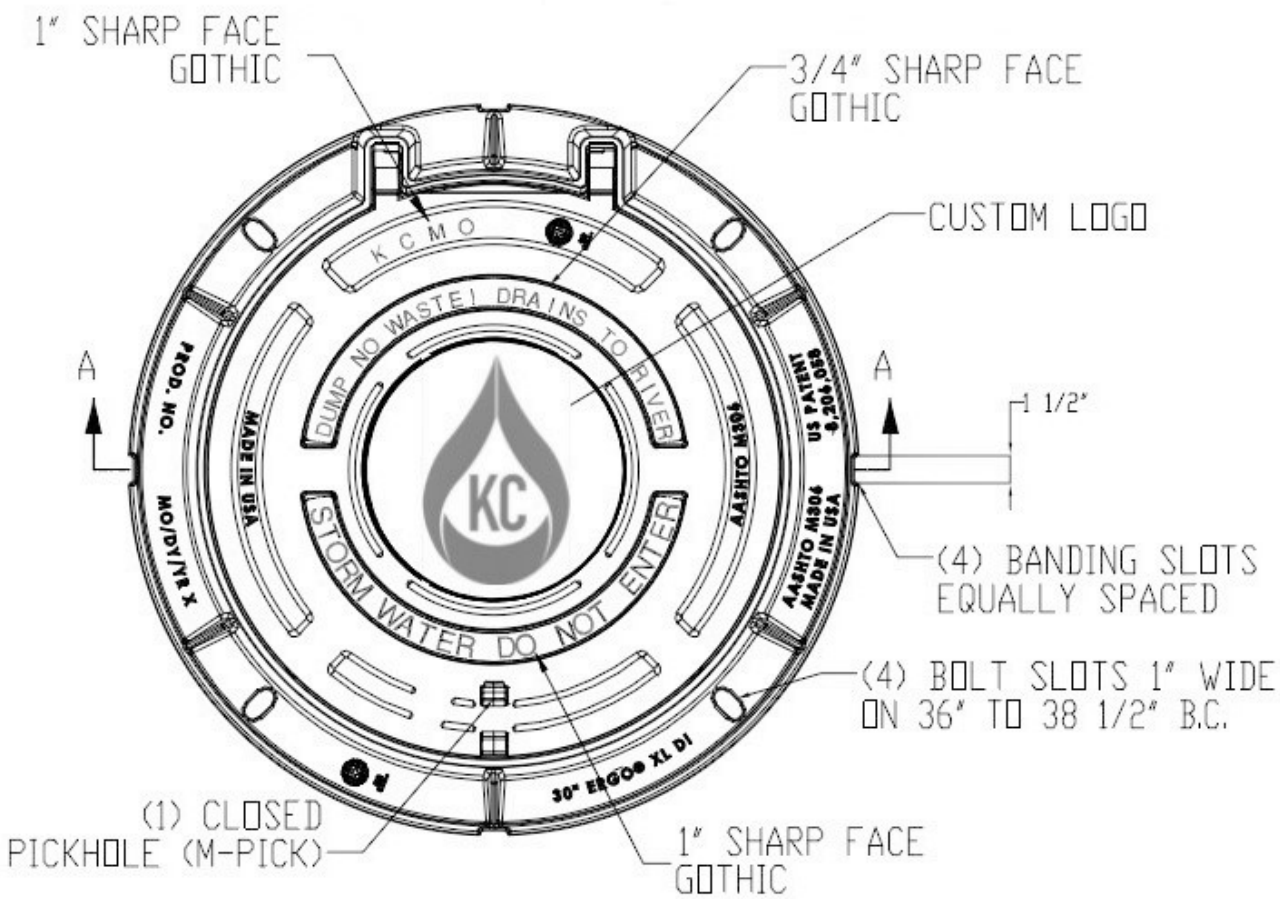

Figure 1: Standard Stormwater Markings

END OF SECTION

SECTION 05012 – WATER CASTINGS

PART 1 - GENERAL

1.01 SUMMARY

A. This specification covers ductile iron castings for water structures and valve box lids and covers. Unless otherwise specified, all castings for water structures shall have a clear opening of 30 inches and hinged covers.

1.02 DESCRIPTION

A. This specification is for water ductile iron castings. Prior to the Contractor supplying castings, all manufacturers shall be approved as suppliers for the City of Kansas City, Missouri (City) and shall be able to demonstrate that there is an acceptable quality control program at the producing foundry.

1.03 SPECIFICATION MODIFICATIONS

A. It is understood that throughout this section these Specifications may be modified by appropriate items in Section 01015 – Specific Project Requirements or as otherwise indicated on the Contract Drawings.

1.04 RELATED SECTIONS

A. Section 01000 – General Project Requirements.
B. Section 01015 – Specific Project Requirements.
C. Section 01300 – Submittals.
C. Section 02641 – Water Valves.
D. Section 03608 – Concrete Vaults.

1.05 CODES AND STANDARDS

A. The publications listed below form a part of this specification to the extent referenced. The publications are referred to within the text by the basic designation only. The version of the codes and standards in effect at the time of the Notice to Bidders shall be used, except as noted on the Drawings or in the Specific Project Requirements section of these specifications.
B. American Association of State Highway and Transportation Offices (AASHTO):
   AASHTO M306 (Latest Revision) – Drainage, Sewer, Utility, and Related Castings.
   Standard Specifications for Highway Bridges.
C. American Society for Testing and Materials (ASTM) International:

ASTM A536	Standard Specification for Ductile Iron Castings.
ASTM A615	Standard Specification for Deformed and Plain Carbon-Steel Bars for Concrete Reinforcement.
ASTM C478	Standard Specification for Precast Reinforced Concrete Manholes Sections.

D. U.S. Environmental Protection Agency: Material Safety and Data Sheet.
E. Federal Register: 29 CFR 1910.1200 Hazard Communications.
F. Federal Standards:
   FED-STD-123 Marking for Domestic Shipment (Civilian Agencies).
G. United States Customs Service:
   Custom Regulation Chapter 1, Part 134, Article 19, U.S.C. 1304.

1.06 CONTACTOR SUBMITTALS

A. Submit the following in accordance with Section 01300 – Submittals:
   1. Certified shop drawings for all castings, product data, manufacturer's catalog cut sheets, specifications and installation details.
   2. Casting identification and location:
      (a) Iron Casting submittals shall include a certification of conformance in accordance with AASHTO M306 (Part 9, Certification) and HS-25 loading.
      (b) A foundry certification shall be furnished stating that samples representing each lot have been tested, inspected and are in accordance with this specification.
   3. A manufacturer's affidavit certifying that the furnished castings comply with the provisions of these specifications, regardless of whether or not the purchaser has an inspector at the plant.
   4. All submittals shall be approved by the City before castings are ordered by the Contractor.

1.07 QUALITY ASSURANCE

A. The Contractor is responsible for the quality assurance and quality control of the work.
B. The Manufacturer shall guarantee items to be free of defects.
C. Manufacturer shall have a quality control process in place and shall provide a copy of their "Quality Control Manual."
D. The manufacturer shall keep records of all tests, MSDS sheets, foundry, lot records, product liability insurance and any customs documentation control data for a period of 3 years. The supplier agrees to furnish copies of records within two weeks after the receipt of request for such records.

1.08 PRODUCT DELIVERY, STORAGE AND HANDLING

A. Product delivery, storage and handling shall be done in accordance with this section and section 01000 – General Project Requirements, paragraph PRODUCT DELIVERY, STORAGE AND HANDLING.
B. Check materials upon arrival. Identify and segregate as to types, functions, and sizes. Store materials off of the ground in a manner affording easy accessibility and not causing excessive rusting or coating with grease or other objectionable materials.
C. Unless otherwise specified on the purchase order, cleaning, preservation, and packaging of castings shall be in accordance with the manufacturer's commercial practice. Packing and marking shall also be adequate to ensure acceptance and safe delivery by the carrier for the mode of transportation employed.
D. If the number of the defective items exceeds two and one half percent of the lot, the purchaser will reject the remaining quantity in the lot and the supplier will redeliver the remaining quantity of the lot.
E. All castings shall be marked in accordance with the requirements of Federal Standard No. 123 and with Chapter 1, Part 134 of the United States Customs Service Regulations, including 19 U.S.C. 1304 paragraph, as applicable. Failure to conform to the above requirements will be just cause for rejection of castings.

PART 2 - PRODUCTS

2.01 DUCTILE IRON CASTINGS

A. Castings shall be manufactured and tested in accordance with ASTM A536 and AASHTO M306-10 HS-25 loading.

2.02 WORKMANSHIP AND FINISH

A. Castings shall be of uniform quality, free from all defects, holes, shrinkage, cracks and any other surface defect. Ductile iron castings shall be ground smooth and well cleaned by shot blasting. Runners, risers, fins, and other cast-on pieces shall be removed.
B. As-cast dimensions may vary by one half the maximum shrinkage possessed by the metal or ± 1/16 in/ft.
C. As-cast weight may vary by ±5 percent from the drawing/specification weight.
D. For traffic service castings, bearing surfaces between rings and covers or grates and frames shall be cast or machined with such precision to prevent rocking.
E. Circular frames and covers shall be furnished with machined horizontal bearing surfaces unless otherwise specified in the standard details.
F. In other matters of workmanship and finish, the castings shall conform to any points agreed upon by the City and the manufacturer/supplier.

2.03 WATER VAULT FRAMES AND COVERS

A. Frames and covers shall be as specified and shall be of the type suitable for the application. The frames and covers shall be circular and the covers with vent holes.
B. Markings – See Figure 1 at the end of this section for approved markings.
C. The minimum clear opening shall be 30 inches for all castings for water structures.
D. All covers shall have provisions for ease of opening, such as concealed pick holes.
E. Unless specified in Section 01015 – Specific Project Requirements or noted on the contract drawings, a locking mechanism is not required.
F. Approved manufacturers:
   1. Clay & Bailey.
   2. Sigma Municipal Castings.
   3. EJ.
G. Models:
   1. The approved manufacturers shall submit their model in accordance with this Section and Section 01300 – Submittals for review and approval.

2.04 AIR RELEASE VAULT FRAMES AND COVERS

A. Frames and covers shall be as specified and shall be of the type suitable for the application. The frames and covers shall be circular and the covers with vent holes.
B. Markings – See Figure 2 at the end of this section for approved markings.
C. The minimum clear opening shall be 30 inches for all castings for water structures.
D. All covers shall have provisions for ease of opening, such as concealed pick holes.
E. All frames and covers shall be “Traffic Rated” in accordance with AASHTO M306 HS-25 Loading.
F. Unless specified in Section 01015 – Specific Project Requirements or noted on the contract drawings, a locking mechanism is not required.
G. Acceptable Manufacturers/Model include the following (or approved equal):
   1. Air Release Vault Frame and Cover as manufactured by East Jordan.

2.05 VALVE BOX LIDS AND COVERS

A. Valve box lids and covers shall be as specified and shall be of the type suitable for the application. The valve box lid and cover shall be circular and the covers indented at the twelve (12) o'clock, three (3) o'clock, six (6) o'clock and nine (9) o'clock positions for ease of removal.
B. Markings – See Figure 3 at the end of this section for approved markings.
C. Approved manufacturers:
   1. Clay & Bailey.
   2. Sigma Municipal Castings.
   3. Star Pipe Products.
   4. EJ.
   5. MacLean Highline.
   6. Pentek Access Boxes.
D. Models:
   1. The approved manufacturers shall submit their model in accordance with this Section and Section 01300 – Submittals for review and approval.

2.06 TEST STATION LIDS AND COVERS

A. Test station lids and covers shall be as specified and shall be of the type suitable for the application. The valve box lid and cover shall be circular and the covers indented at the twelve (12) o'clock, three (3) o'clock, six (6) o'clock and nine (9) o'clock positions for ease of removal.
B. Markings – See Figure 4 at the end of this section for approved markings.
C. Approved manufacturers:
   1. Clay & Bailey.
   2. Sigma Municipal Castings.
   3. Star Pipe Products.
   4. EJ.
   5. MacLean Highline.
   6. Pentek Access Boxes.
D. Models:
   The approved manufacturers shall submit their model in accordance with this Section and Section 01300 – Submittals for review and approval.

PART 3 - EXECUTION

3.01 VAULT FRAMES AND COVERS

A. The Contractor shall coordinate the installation of the castings with the work of the other trades in order to avoid delays. Install inserts or anchors as required by individual items.
B. Install items as specified and in accordance with the manufacturer's instructions.
C. Install items plumb, level, in alignment and anchor securely. All frames shall be anchored at four points.

3.02 CLEANING

A. Clean all items after installation to remove rust, dirt, oil, grease and other deleterious substances.
B. Clean all welds, bolted connections and abraded areas and apply the shop coating. Touch up damaged areas with the shop coating.

3.03 WARRANTY

A. All castings shall have a lifetime warranty against manufacturing defects for all components.

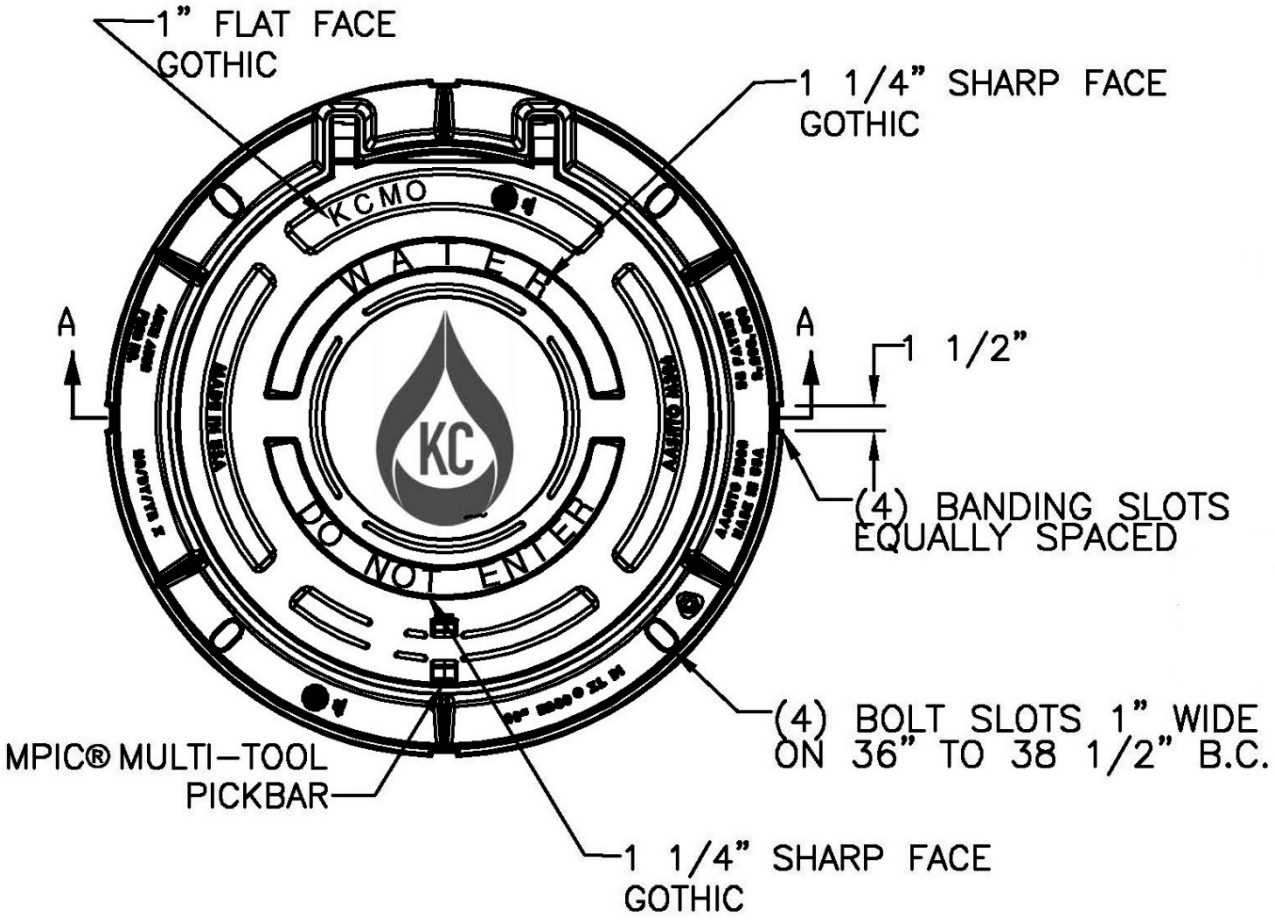

Figure 1: Standard Water Vault Markings

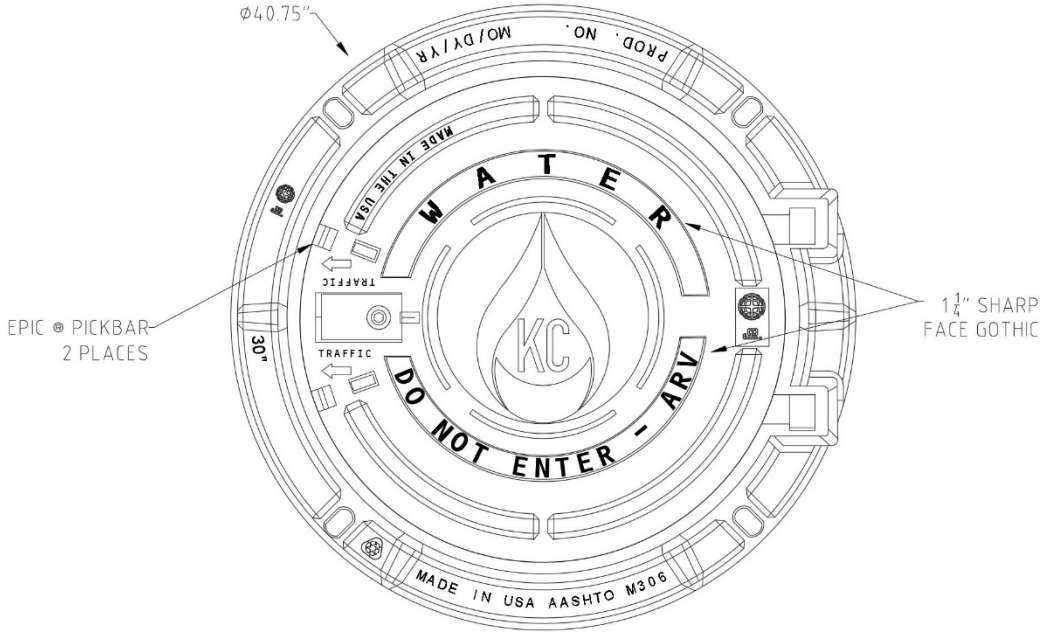

Figure 2: Standard Air Release Vault Markings

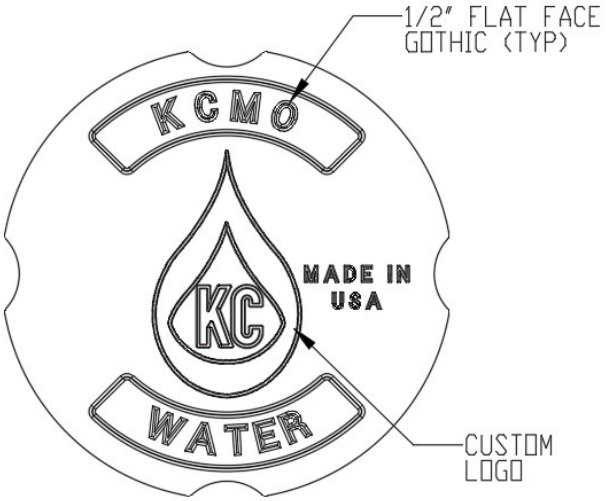

Figure 3: Standard Valve Cover Markings

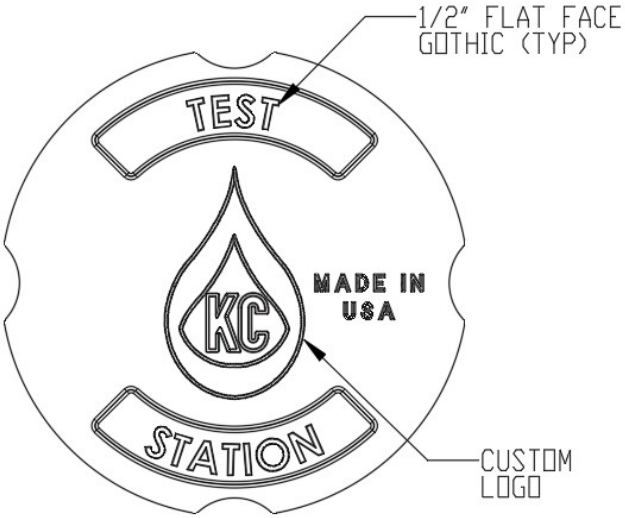

Figure 4: Standard Test Station Cover Markings

END OF SECTION

CITY OF KANSAS CITY, MISSOURI

STORMWATER POLLUTION PREVENTION PLAN (SWPPP)

For Capital Improvement Projects Disturbing One or More Acres

Missouri State General Operating Permit (Land Disturbance Permit) MO-R100000

(July 2022 – Jun 2027)

(Insert Project Name)

(Insert Project Site Address)

(Insert Owner Department)

(Insert Project Site Telephone Number {if applicable})

Contacts in case of spills:

For **hazardous substances releases**, under the Missouri Spill Bill, responsible parties or spillers are required to report to Missouri department of Natural Resources 24-hour Environmental Emergency Response Spill Line at (**573) 634-2436**, or the National Response Center at (800)-424-8802.

For **non-hazardous substances releases**, should a spill or an unauthorized discharge cause or permit any contaminants, other than sediment, or hazardous substance to discharge or enter waters of the state, the unauthorized discharge must be reported to the Missouri Department of Natural Resources regional office as soon as practicable but no more than 24 hours after the discovery of the discharge. Call Kansas City Regional Office **(816) 251-0700**, or the department's Environmental Services Program (573) 526-3315.

CERTIFICATIONS
(To be Completed by ALL PARTIES)

Design Professional's Declaration:

I certify under penalty of law that this document and all attachments were prepared under my direction or supervision in accordance with a system designed to assure that qualified personnel properly gather and evaluate the information submitted. Based on my inquiry of the person or persons who manage the system, or those persons directly responsible for gathering the information, the information submitted is, to the best of my knowledge and belief, true, accurate, and complete. I am aware that there are significant penalties for submitting false information, including the possibility of fine and imprisonment for knowing violations.

Design Professional: _____

Print Name: _____ Title: _____

Signature: _____ Date: _____

City's Review:

I have reviewed this SWPPP for compliance with the requirements contained in the City's Missouri State Operating Permit for land disturbance activities and have found the plan complete prior to commencement of land disturbance activities.

Owner Department: _____

Print Name: _____ Title: _____

Signature: _____ Date: _____

General Contractor's Certification:

I certify under penalty of law that this document and all attachments were prepared under my direction or supervision in accordance with a system designed to assure that qualified personnel properly gather and evaluate the information submitted. Based on my inquiry of the person or persons who manage the system, or those persons directly responsible for gathering the information, the information submitted is, to the best of my knowledge and belief, true, accurate, and complete. I am aware that there are significant penalties for submitting false information, including the possibility of fine and imprisonment for knowing violations.

General Contractor: _____

Print Name: _____ Title: _____

Signature: _____ Date: _____

Note: Name the person(s) responsible for inspection, operation, and maintenance of BMPs. The SWPPP shall list the names and describe the role of all owners/primary operators (such as general contractor, project manager) responsible for environmental or sediment and erosion control at the land disturbance site.

Subcontractors Certification:

I hereby certify that I understand the requirements stated in this SWPPP, that I am responsible for completing the requirements, which have been listed in the plan as being a part of my scope of work.

Subcontractor:_____
Print Name/Signature:_____ Title: _____
Project Role(s): _____ Date: _____

Subcontractor:_____
Print Name/Signature:_____ Title: _____
Project Role(s): _____ Date: _____

Subcontractor:_____
Print Name/Signature:_____ Title: _____
Project Role(s): _____ Date: _____

Subcontractor:_____
Print Name/Signature:_____ Title: _____
Project Role(s): _____ Date: _____

Subcontractor:_____
Print Name/Signature:_____ Title: _____
Project Role(s): _____ Date: _____

Subcontractor:_____
Print Name/Signature:_____ Title: _____
Project Role(s): _____ Date: _____

Subcontractor:_____
Print Name/Signature:_____ Title: _____
Project Role(s): _____ Date: _____

Contents

CERTIFICATIONS I
PART I: GENERAL PROJECT INFORMATION 1
PART II: GENERAL REQUIREMENTS 2
PART III: PROJECT PLANNING & DESIGN 3
PART IV: PROJECT INFORMATION 12
PART V: BMP PERFORMANCE REQUIREMENTS 15
PART VI: SITE INSPECTION REPORT 19
Appendix A – SWPPP Update and Modification Log 22
Appendix B – Public Notification Sign 24
Appendix C – General Location Map 26
Appendix D – Site Map(s) 28
Appendix E – Site Inspection Reports 31
Appendix F – City's Construction General Permit & Additional Information 36

PART I: GENERAL PROJECT INFORMATION
(To be completed by Owner Department or Design Professional)

1. Project Site Name: _____

Project Site Address/Location: _____

City: _____ **State:** _____ **Zip Code:** _____ **County:** _____

Section, Township, Range: _____

Project Number: _____

Owner Department: _____

Address: _____

City: _____ **State:** _____ **Zip Code:** _____

Phone: _____ **Fax:** _____

E-mail: _____ **Cell Phone:** _____

2. Record of Important Dates: fill in during construction activities.

Completed SWPPP approval	
Groundbreaking activities begin	
Stabilization measures initiated	
Permanent stabilization achieved	

3. Describe the Nature of the Land Disturbance Activity:

(a) The function of the project (e.g., low density residential, shopping mall, highway, etc.),
(b) The intended sequence and timing of activities that disturb the soils at the site; and
(c) Estimates of the total area expected to be disturbed by excavation, grading, or other land disturbance support activities including off-site borrow and fill areas.

(*Use additional sheets as necessary*)

(a)	
(b) 1)	7)
2)	8)
3)	9)
4)	10)
5)	11)
6)	12)

Estimated Project Start Date: _____

Estimated Project Completion Date: _____

(c) **Total Site Area (in acres):** _____

Estimated Total Area (in acres) to be disturbed by all activities: _____

PART II: GENERAL REQUIREMENTS
(Applicable to All PARTIES)

1. Conditions for SWPPP Update

The SWPPP shall be amended and updated as appropriate during the term of the land disturbance activity. All SWPPP modifications shall be signed and dated. The SWPPP shall be amended to incorporate any significant site condition changes which impact the nature and condition of stormwater discharges. At a minimum, these changes include whenever:

(a) The location, design, operation, or maintenance of BMPs is changed;

(b) Design of the construction project is changed that could significantly affect the quality of the stormwater discharges;

(c) Site inspections indicate deficiencies in the SWPPP or any BMP;

(d) Missouri Department of Natural Resources notifies the permittee in writing of deficiencies in the SWPPP;

(e) The SWPPP is determined to be ineffective in minimizing or controlling erosion and sedimentation (e.g., there is visual evidence of excessive site erosion or sediment deposits in streams, lakes, or downstream waterways, sediment or other wastes off site); and/or

(f) Missouri Department of Natural Resources determines violations of water quality standards may occur or have occurred.

2. Record of SWPPP Update: fill in **Appendix A**

3. Restriction and Limitations

The land disturbance permit does NOT allow placement of fill material into any stream or wetland, alteration of a stream channel, or obstruction of stream flow unless authorized by a CWA Section 404 Permit, or placement of fill in floodplains unless authorized by appropriate federal and/or state floodplain development authorities.

The land disturbance permit does NOT supersede any requirement of the National Environmental Policy Act; the Endangered Species Act; the National Historic Preservation Act; the Comprehensive Environmental Response, Compensation and Liability Act; the Resource Conservation and Recovery Act; or any other relevant acts.

4. Erosion and Sediment Controls

Ensure the **design, installation, and maintenance** of effective erosion and sediment controls to minimize the discharge of pollutants. At a minimum, such controls must be designed, installed, and maintained to:

(a) Control stormwater volume, velocity, and peak flow rates to minimize soil erosion;

(b) Control stormwater discharges, including both peak flow rates and total stormwater volume, to minimize erosion at outlets and to minimize downstream channel and stream bank erosion and scour;

(c) Minimize the amount of exposed soil during construction activity;

(d) Minimize the disturbance of steep slopes;

(e) Minimize sediment discharges from the site. Address factors such as:

1) The amount, frequency, intensity, and duration of precipitation;

2) The nature of resulting stormwater runoff;

3) Expected flow from impervious surfaces, slopes, and drainage features; and

4) Soil characteristics, including the range of soil particle size expected to be present on the site.

(f) Provide and maintain natural buffers around surface waters as detailed in the Permit – Part V. BMP REQUIREMENTS Condition 7, direct stormwater to vegetated areas to increase sediment removal and maximize stormwater infiltration and filtering, unless infeasible; and

(g) Minimize soil compaction and preserve topsoil where practicable.

PART III: PROJECT PLANNING & DESIGN
(To be completed by DESIGN PROFESSIONAL)

1. General Information

Design Professional develops the initial SWPPP, including narrative description and SITE MAP (s) containing all the information as required by the MO-R100000 (effective July 2022).

Designer's Name: _____
Company Name: _____
Address: _____
City: _____ **State:** _____ **Zip Code:** _____
Phone: _____ **Fax:** _____
E-mail: _____ **Cell Phone:** _____

2. Soil Disturbing Activities:

Soil disturbing activities for this project will include the following (Check all that apply):

☐ Clearing and grubbing of existing trees
☐ Stripping of topsoil within the limits of construction
☐ Stockpiling and re-spreading
☐ Utility trench excavation and backfill
☐ Preparing sub grade for streets and sidewalks
☐ Backfilling curbs and sidewalks
☐ Disposal areas for excess excavated material
☐ Borrow areas for fill material
☐ Construction of sediment basins or storm water
☐ Construction of compacted fill areas for residential building
☐ Minimize soil compaction and preserve topsoil
☐ Provide and maintain natural buffers around surface waters
☐ Other: _____

3. Downstream Information:

Name of primary receiving water body: _____

Does this Project require 404 Permit? ☐ Permit Number: _____

☐ Water Quality Certification Number: _____

List and Describe the location of all outfalls:

Outfall Location	Receiving Waterbody	Distance to receiving waterbody
1)		
2)		
3)		
4)		
5)		

4. Determine the 2-year, 24-hour Storm Event

A 2-year, 24-hour storm event can be determined for the project location using the National Oceanic and Atmospheric Administration's National Weather Service Atlas 14 https://hdsc.nws.noaa.gov/hdsc/pfds/pfds_map_cont.html, or can be determine using local rainfall distribution for a 2-year, 24 hours storm event using multi-decade local high density rain gauge data, as approved by Missouri Department of Natural Resources.

Specify the method used to determine the 2-year, 24-hour storm event for the project location:

☐ NOAA Atlas 14

☐ Based on multi-decade local high density rain gauge data, as approved by the Department

Specify the 2-year, 24-hour storm event for the project location: _____ inch

5. Authorized Non-stormwater Discharges

Authorized non-stormwater discharges associated with construction activities: check all occurring on site, and note where these discharges occur.

☐ (a) Discharges from emergency fire-fighting activities;

Where: _____

☐ (b) Hydrant flushing and water line flushing, provided the discharged water is managed to avoid instream water quality impacts;

Where: _____

☐ (c) Landscape watering, including to establish vegetation;

Where: _____

☐ (d) Water used to control dust;

Where: _____

☐ (e) Waters used to rinse vehicles and equipment, provided there is no discharge of soaps, solvents, or detergents used for such purposes;

Where: _____

☐ (f) External building washdown, provided soaps, solvents, and detergents are not used, and external surfaces do not contain hazardous substances (e.g., paint or caulk containing polychlorinated biphenyls (PCBs)

Where: _____

☐ (g) Pavement wash waters, provided spills or leaks of toxic or hazardous substances have not occurred (unless all spill material has been removed) and where soaps, solvents, and detergents are not used. Directing pavement wash waters directly into any water of the state, storm drain inlet, or stormwater conveyance (constructed or natural site drainage features), unless the conveyance is connected to an effective control, is prohibited;

Where: _____

☐ (h) Uncontaminated air conditioning or compressor condensate;

Where: _____

☐ (i) Uncontaminated, non-turbid discharges of ground water or spring water;

Where: _____

☐ (j) Foundation or footing drains where flows are not contaminated with process materials;

Where: _____

and

☐ (k) Uncontaminated construction dewatering water discharged in accordance with requirements found in this permit for specific dewatering activities.

Where: _____

6. Requirements for Best Management Practices (BMPs)

BMPs for land disturbance are a schedule of activities, practices, or procedures that reduces the amount of soil available for transport or a device that reduces the amount of suspended solids in runoff before discharge to waters of the state. BMPs are divided into two main categories: structural or non-structural; and they are also classified as temporary or permanent. Temporary BMPs may be added and removed as necessary with updates to the Stormwater Pollution Prevention Plan (SWPPP).

(1) Site Preservation:

(a) **EXISTING VEGETATION, TREES, AND TOPSOIL SHALL BE PRESERVED WHERE PRACTICABLE**.

(b) The disturbance of steep slopes shall be minimized.

(2) Riparian Buffer or a Structural Equivalent for Surface Waters of the State:

For surface waters of the state, defined in Section 644.016.1(27) RSMo, located on or adjacent to the site, a riparian buffer or structural equivalent must be maintained in accordance with at least one of the following options.

(a) Provide and maintain a 50-foot undisturbed natural buffer; or

(b) Provide and maintain an undisturbed natural buffer that is less than 50 feet and is supplemented by erosion and sediment controls that achieve the sediment load reduction equivalent to a 50-foot undisturbed natural buffer; or

(c) If infeasible to provide and maintain an undisturbed natural buffer of any size, implement erosion and sediment controls to achieve the sediment load reduction equivalent to a 50-foot undisturbed natural buffer.

(d) Exempt from compliance with (a), (b), or (c) above if one or more of the following exceptions apply and documentation is provided in the SWPPP:

1) As authorized per CWA Section 404 Department of the Army permit and its associated Section 401 Water Quality Certification from the Department.

2) If there is no discharge of stormwater to waters of the state through the area between the disturbed portions of the site and waters of the state located within 50 feet of the site. This includes situations where permanent control measures have been implemented that will prevent such discharges, such as a berm or other barrier.

3) Where no natural buffer exists due to preexisting development disturbances that occurred prior to the initiation of planning for the current development of the site.

a. Where some natural buffer exists but portions of the area within 50 feet of the waters of the state are occupied by preexisting development disturbances the permittee is required to comply with (a), (b), or (c) above.

4) For linear projects where site constraints make it infeasible to implement a buffer or equivalent provided the permittee limit disturbances within 50 feet of any waters of the state and/or supplemental erosion and sediment controls are provided to treat stormwater discharges from earth disturbances within 50 feet of the water of the state. It must also be documented in the SWPPP the rationale for why it is infeasible to implement (a), (b), or (c) and describe any buffer width retained and supplemental BMPs installed.

(e) Where the permittee is retaining a buffer of any size, the buffer should be measured perpendicularly from any of the following points, whichever is further landward from the water:

1) The ordinary high water mark of the water body, defined as the line on the shore established by fluctuations of water and indicated by physical characteristics such as a clear, natural line impressed on the bank, shelving, changes in the character of soil, destruction of terrestrial vegetation, and/or the presence of litter and debris; or

2) The edge of the stream or river bank, bluff, or cliff, whichever is applicable.

(3) Perimeter Control:

Sediment controls shall be used along any perimeter areas of the site that are downgradient from any exposed soil or other disturbed areas. Prevent stormwater from circumventing the edge of the perimeter control. For sites where perimeter controls are infeasible, other practices shall be implemented to minimize discharges to perimeter areas of the site.

(4) Stockpile Management:

Manage stockpiles or land clearing debris piles composed, in whole or in part, of sediment and/or soil.

(a) Locate the piles outside of any natural buffers zones, established under the condition above, and away from any stormwater conveyances, drain inlets, and areas where stormwater flow is concentrated;

(b) Install a sediment barrier along all downgradient perimeter areas;

(c) Divert surface flows around stockpiles to reduce and minimize erosion of the stockpile

(5) Sedimentation Basins:

A sedimentation basin shall be included for each drainage area with ten or more acres disturbed at one time.

(a) The sedimentation basin shall be sized, at a minimum, to treat a local 2-year, 24-hour storm.

(b) Sediment basins shall not be constructed in any waters of the state or natural buffer zones.

(c) Discharges from dewatering activities shall be managed by appropriate controls. The SWPPP shall include a description of any anticipated dewatering methods and specific BMPs designed to treat dewatering water.

1) Appropriate controls include, but are not limited to, sediment socks, dewatering tanks, tube settlers, weir tanks, filtration systems (e.g., bag or sand filters), and passive treatment systems that are designed to remove or retain sediment.

2) Erosion controls and velocity dissipation devices (e.g., check dams, riprap, and vegetated buffers) to minimize erosion at inlets, outlets, and discharge points from shall be utilized.

Where use of a sediment basin is infeasible, the SWPPP shall evaluate and specify other similarly effective BMPs to be employed to control erosion and sediment. These similarly effective BMPs shall be selected from appropriate BMP guidance documents authorized by this permit. The BMPs must provide equivalent water quality protection to achieve compliance with this permit. The SWPPP shall require both temporary and permanent sedimentation basins to have a stabilized spillway to minimize the potential for erosion of the spillway or basin embankment.

(6) Concrete Washout Facilities:

Concrete washout facilities shall be used to contain concrete waste from the activities onsite, unless the washout of trucks and equipment is managed properly at an off-site location. The washout facility shall be managed to prevent solid and/or liquid waste from entering waters of the state by the following:

(a) Direct the wash water into leak-proof containers or pits designed so that no overflows can occur due to inadequate sizing or precipitation;

(b) Locate washout activities away from waters of the state, stormwater inlets, and/or stormwater conveyances where practicable. If not practicable, use BMPs to reduce risk of waste leaving the washout facility;

(c) Designate the washout area(s) and conduct such activities only in these areas.

(d) Ensure contractors are aware of the location, such as by marking the area(s) on the map or signage visible to the truck and/or equipment operators.

(7) Sediment Trackout from the Site:

Minimize sediment trackout from the site and sediment transport onto roadways.

(a) Restrict vehicle traffic to designated exit points.

(b) Use appropriate stabilization techniques or BMPs at all points that exit onto paved roads or areas outside of the site.

(c) Use additional controls or BMPs to remove sediment from vehicle and equipment tires prior to exit from facility where necessary.

(d) Stormwater inlets susceptible to receiving sediment or other pollutants from the permitted land disturbance site shall have curb inlet protection. This may include inlets off the active area where track out from vehicles and equipment could impact the stormwater runoff to those inlets.

(8) Selection of BMPs:

Appropriate BMPs shall be selected for use at the site.

(a) Stormwater volume and velocity shall be considered when selecting effective BMPs.

(b) A BMP that has demonstrated ineffectiveness in preventing or minimizing sediment or other pollutants from leaving a given site shall be replaced with a more effective BMP, or additional and sequential BMPs and treatment devices may be incorporated as site conditions allow.

(c) A schedule for performing erosion control measures shall be considered in selecting BMPs.

(d) Stormwater discharges which leave the site from disturbed areas shall pass through an appropriate impediment to sediment movement such as a sedimentation basin, sediment traps (including vegetative buffers), or silt fences prior to leaving the land disturbance site.

(9) Types of BMPs:

Check all the types of BMPs used at the site:

- ***Soil Stabilization and Slope Protection BMPs***

☐ Scheduling ☐ Hydro-seeding ☐ Earth Dikes/Swales & Lined Ditches

☐ Straw Mulch ☐ Hydraulic/Wood Mulch ☐ Outlet Protection/Velocity

☐ Slope Drains ☐ Streambank Stabilization ☐ Preservation of Existing Vegetation

☐ Soil Binders ☐ Geotextiles, ECBs or TRMs ☐ Other (specify): _____

- ***Perimeter Controls & Sediment Barriers***

☐ Silt Fence ☐ Sandbag Barrier ☐ Storm Drain Inlet Protection ☐ Fiber Rolls

☐ Sediment Traps ☐ Check Dam ☐ Sediment/Desilting Basin ☐ Gravel Bag Berm

☐ Street Sweeping and Vacuuming ☐ Direct Stormwater to vegetated areas

☐ Maintain natural buffers around surface waters ☐ Other (specify): _____

- ***Establish Stabilized Construction Exits***

☐ Stone Pads ☐ Entrance/Outlet Tire Wash ☐ Other (specify): _____

- ***Non-Storm Water Management BMPs***

☐ Pile Driving ☐ Concrete Finishing ☐ Demolition/Removal Over Water

☐ Dewatering ☐ Concrete Curing ☐ Illicit/Illegal Discharge

☐ Clean Water ☐ Paving & Grinding ☐ Vehicle & Equipment Cleaning

☐ Dust Control ☐ Water Conservation Practices ☐ Temporary Stream Crossing

☐ Material/Equipment Use Over water ☐ Vehicle & Equipment Fueling & Maintenance

☐ Other (specify): _____

- ***Waste Management & Materials Pollution Control BMPs***

☐ Spill Prevention & Control ☐ Liquid Waste Management ☐ Sanitary/Septic Waste Management

☐ Stockpile Management ☐ Concrete Waste Management (Washout Area) ☐ Hazardous Waste Management

☐ Solid Waste Management ☐ Material Delivery/Storage/Use ☐ Contaminated Waste Management

☐ Other (specify): _____

- ***Permanent Stabilization BMPs***

☐ Retaining Walls ☐ Infiltration Basins ☐ Outlet Protection/Velocity Dissipation

☐ Biofilters ☐ Vegetative Buffers ☐ Earth Dikes, Drainage Swales & Lined Ditches

☐ Porous Pavement ☐ Slope Protection ☐ Detention/Retention Devices

☐ Other (specify): _____

Note: make copies of this page if more BMP instances are to be included

(10) Description of BMPs:

Describe both structural and non-structural BMPs that will be used at the site.

(a) Provide the following general information for each BMP type which will be used one or more times at the site:

BMP Type 1:

Physical description:

Site conditions required:

Installation/construction procedures (including typical drawing):

Operation/maintenance procedures and schedules:

BMP Type 2:

Physical description:

Site conditions required:

Installation/construction procedures (including typical drawing):

Operation/maintenance procedures and schedules:

Note: make copies of this page if more BMP instances are to be included

(b) Provide the following information for each specific instance where a BMP is to be installed:

1) The BMP is temporary or permanent
2) When the BMP will be installed in relation to each phase of the land disturbance procedures to complete the project
3) Site conditions required before removal of the temporary BMP

BMP 1:

The BMP is temporary ☐, or permanent ☐.

Describe when the BMP will be installed in relation to each phase of the land disturbance procedures to complete the project:

Installation/construction procedures (including typical drawing):

Operation/maintenance procedures and schedules:

BMP 2:

The BMP is temporary ☐, or permanent ☐.

Describe when the BMP will be installed in relation to each phase of the land disturbance procedures to complete the project:

Installation/construction procedures (including typical drawing):

Operation/maintenance procedures and schedules:

7. Site Map Requirements:

Create a legible site map or multiple maps if necessary, identifying:

(a) Site boundaries of the property;
(b) Locations of all waters of the state (including wetlands) within the site and half a mile downstream of the site's outfalls;
(c) Location of all outfalls;
(d) Location of stormwater inlets and conveyances including ditches, pipes, man-made conduits, and swales;
(e) Areas of soil disturbance and areas that will not be disturbed (or a statement that all areas of the site will be disturbed unless otherwise noted);
(f) Locations of on-site and off-site material, waste, borrow, concrete washout facility, disposal of the material removed from sediment basins, equipment storage areas and stockpiles;
(g) Designated points where vehicles will exit the site;
(h) Location of structural and non-structural BMPs, including natural buffer areas, identified in the SWPPP;
(i) Direction(s) of stormwater flow (use arrows) and approximate slopes before and after grading activities;
(j) Location and timing of stabilization measures;
(k) Areas where final stabilization has been achieved;
(l) Change of a drainage course; and
(m) The sloped areas for all phases of the project.

Add the maps to Appendices C and D.

8. Resources:

The contractor must select, install, use, operate, and maintain appropriate BMPs for the permitted sites. The following manuals are acceptable resources for the selection of appropriate BMPs, but should not be considered exclusive:

- Kansas City Metro Chapter of the American Public Works Association:
  Design Guidance Documents: Division 5100 Erosion and Sediment Control manual.

  Standard Drawings: Erosion and Sediment Control Details (2/2017)
  http://kcmetro.apwa.net/Content/Chapters/kcmetro.apwa.net/File/Specifications%2FErosion%20and%20Sediment%20Control_Details_APWA%20021517.pdf

- National Menu of Best Management Practices (BMPs) for Stormwater-Construction. United States Environmental Protection Agency USEPA (1/27/2022).
  https://www.epa.gov/npdes/national-menu-best-management-practices-bmps-stormwater-construction

- Developing Your Stormwater Pollution Prevention Plan: A Guide for Construction Sites. United States Environmental Protection Agency (USEPA), EPA 833-R-06-004 (May 2007).
  https://www.epa.gov/sites/production/files/2015-10/documents/sw_swppp_guide.pdf

- Developing a Stormwater Pollution Prevention Plan (SWPPP)
  https://www.epa.gov/npdes/developing-stormwater-pollution-prevention-plan-swppp

- Protecting Water Quality: A field guide to erosion, sediment and stormwater best management practices for development sites in Missouri. Missouri Department of Natural Resources. 1/7/2016
  https://dnr.mo.gov/document-search/protecting-water-quality-field-guide

PART IV: PROJECT INFORMATION
(To be completed by OWNER DEPARTMENT & GENERAL CONTRACTOR)

1. Project Contact Information

City Department: _____
Project Manager's Name: _____
Address: _____
Phone: _____ **Fax:** _____
E-mail: _____ **Cell Phone:** _____

Note: The project manager is responsible for notifying the landowner and each contractor or entity (including utility crews and city employees or their agents) who will perform work at the site of the existence of the SWPPP and what actions or precautions shall be taken while on site to minimize the potential for erosion and the potential for damaging any BMP. The project manager and owner department are responsible for any damage a subcontractor may do to established BMPs and any subsequent water quality violation resulting from the damage.

General Contractor's Name: _____
Company Name: _____
Address: _____
City: _____ **State:** _____ **Zip Code:** _____
Phone: _____ **Fax:** _____
E-mail: _____ **Cell Phone:** _____

Contractor's Environmental Lead
Designated Individual: _____
Address: _____
City: _____ **State:** _____ **Zip Code:** _____
Phone: _____ **Fax:** _____
E-mail: _____ **Cell Phone:** _____

***Note**:* The General Contractor must designate an environmental lead who has primary responsibility for ensuring compliance with the Storm Water Pollution Prevention Plan (SWPPP) during construction. This environmental lead shall have knowledge in erosion, sediment, and stormwater control principles, knowledge of the permit, and the site's SWPPP. The environmental lead shall ensure all personnel and contractors understand any requirements of this permit may be affected by the work they are doing. The environmental lead or designated inspector(s) knowledgeable in erosion, sediment, and stormwater control principles shall inspect all structures that function to prevent or minimize pollution of waters of the state.

State Contacts for Spills, Overflows, and Other Unauthorized Discharges:
Should an unauthorized discharge cause or permit any contaminants, other than sediment, or hazardous substance to discharge or enter waters of the state, the unauthorized discharge must be reported to the regional office, **(816) 251-0700**, as soon as practicable but no more than 24 hours after the discovery of the discharge.
If the spill or overflow needs to be reported after normal business hours or on the weekend, the facility must call the Department's Environmental Emergency Response hotline at **(573) 634-2436**. Leaving a message on a Department staff member voice-mail does not satisfy this reporting requirement.

***Note*:** A record of all spills shall be retained with the SWPPP and made available to the Department upon request.

Subcontractors: Check all items for which subcontractors will be used and provide a list of all the subcontractor's company names:

☐ Gas ☐ Grading ☐ Sanitary sewers ☐ Concrete flatwork ☐ Concrete drainage structures

☐ Water ☐ Blasting ☐ Storm sewers ☐ Sediment controls ☐ Seeding & Mulching

☐ Electric ☐ Paving ☐ Curb & Gutters ☐ Other (specify): _____

List All Additional subcontractors used on the project whose scope of work includes land disturbance activities (keep list updated throughout the project):

Contact Name / Project Role (including inspection, operation, and maintenance of BMPs)	**Phone Number**

Other Utilities and Contractors: List all other utility companies and contractors which will be doing work on the site with their own sub-contractors involving land disturbance:

Contact Name / Project Role	**Phone Number**

_____ _____

_____ _____

_____ _____

_____ _____

_____ _____

_____ _____

2. Sequence of Construction:

The General Contractor must complete the following intended construction sequence and timing for major activities, including any opportunities for phasing, grading and stabilization activities to minimize the overall amount of disturbed soil that will be subject to potential erosion at one time.

Phase	BMP's & Stabilization Methods
1) _____	_____
2) _____	_____
3) _____	_____
4) _____	_____
5) _____	_____
6) _____	_____
7) _____	_____
8) _____	_____
9) _____	_____
10) _____	_____
11) _____	_____
12) _____	_____
13) _____	_____
14) _____	_____
15) _____	_____
16) _____	_____
17) _____	_____

PART V: BMP PERFORMANCE REQUIREMENTS
(To be Implemented by GENERAL CONTRACTOR)

1. On-site Record Keeping

(1) The SWPPP must be developed and implemented prior to conducting any land disturbance activities and must be specific to the land disturbance activities at the site.

(2) The SWPPP shall be updated any time site conditions warrant adjustments to the project or BMPs. See Part I. General Requirements – 1. SWPPP Update and 2. Record of SWPPP Update.

(3) An electronic copy or a paper copy of the SWPPP, and any required reports, must be accessible to anyone on site at all times when land disturbance operations are in process or other operational activities that may affect the maintenance or integrity of the BMP structures and made available.

(4) A log of each inspection and/or copy of the inspection report shall be kept readily accessible and must be made available upon request by the Missouri Department of Natural Resources. Electronic logs are acceptable as long as reports can be provided within 24 hours. The inspection report shall be signed by the environmental lead or designated inspector.

(5) A record of all spills shall be retained with the SWPPP.

2. General Requirements

(1) Notification Sign:
A public notification sign shall be posted at the main entrance to the site, or a publicly visible location, with the specific MOR100 permit number. See Appendix B. for the sign. The public notification sign must be visible from the public road that provides access to the site's main entrance. An alternate location is acceptable provided the public can see it and it is noted in the SWPPP. The public notification sign must remain posted at the site until the site is finalized.

(2) Housekeeping Practices:
Good housekeeping practices shall be maintained at all times to keep waste from entering waters of the state.

(a) Provide solid and hazardous waste management practices, including providing trash containers, regular site cleanup for proper disposal of solid waste such as scrap building material, product/material shipping waste, food/beverage containers, spent structural BMPs;

(b) Provide containers and methods for proper disposal of waste paints, solvents, and cleaning compounds.

(c) Manage sanitary waste. Portable toilets shall be positioned so that they are secure and will not be tipped or knocked over and so that they are located away from waters of the state and stormwater inlets and stormwater conveyances.

(d) Ensure the storage of construction materials be kept away from drainage courses, stormwater conveyances, storm drain inlets, and low areas.

(3) Fueling Facilities:
All fueling facilities present shall at all times adhere to applicable federal and state regulations concerning underground storage, above ground storage, and dispensers.

(4) Equipment and Vehicle Washing:
No detergents, additives, or soaps of any kind shall be discharged. Rinse waters must be treated in a sediment basin or alternative control that provides equivalent or better treatment prior to discharge.

(5) Hazardous Wastes:
Any hazardous wastes that are generated onsite shall be managed, stored, and transported according to the provisions of the Missouri Hazardous Waste Laws and Regulations.

(6) Material and Chemical Storage:

(a) Minimize the exposure of building materials, building products, construction wastes, trash, landscape materials, fertilizers, pesticides, herbicides, detergents, sanitary waste, and other materials present on the site to precipitation and to stormwater;

(b) Store all paints, solvents, petroleum products, petroleum waste products, and storage containers (such as drums, cans, or cartons) so they are not exposed to stormwater or provide other prescribed BMPs (such as plastic lids and/or portable spill pans) to prevent the commingling of stormwater with container contents. Commingled water may not be discharged.

(c) Provide spill prevention, control, and countermeasures to contain the spill. Any containment system used to implement this requirement shall be constructed of materials compatible with the substances contained and shall prevent the contamination of groundwater.

(7) Leak and Spill Prevention:
Implement measures intended to prevent the spillage or loss of fluids, oil, grease, fuel, etc. from vehicles and equipment to thereby prevent the contamination of stormwater from these substances. This may include prevention measures such as, but not limited to, utilizing drip pans under vehicles and equipment stored outdoors, covering fueling areas, using dry clean-up methods, use of absorbents, and cleaning pavement surfaces to remove oil and grease.

(8) Spills, Overflows, and Other Unauthorized Discharges:
(a) Any spill, overflow, or other discharge not specifically authorized in the permit are unauthorized.
(b) Spills must be cleaned up as soon as possible to prevent entrainment in stormwater.
(c) Should a spill or an unauthorized discharge cause or permit any contaminants, other than sediment, or hazardous substance to discharge or enter waters of the state, the unauthorized discharge must be reported to the Missouri Department of Natural Resources regional office as soon as practicable but no more than 24 hours after the discovery of the discharge. If the spill or overflow needs to be reported after normal business hours or on the weekend, the facility must call the Department's Environmental Emergency Response hotline at (573) 634-2436. Leaving a message on a Department staff member voice-mail does not satisfy this reporting requirement.
(d) A record of all spills shall be retained with the SWPPP and made available to the Missouri Department of Natural Resources upon request.

3. Structural BMP Installation and Maintenance
All BMPs shall be properly installed and operational at the locations and relative times specified in the SWPPP. Installation of BMPs necessary to prevent soil erosion and sedimentation at the downgradient project boundary (e.g. buffers, perimeter controls, exit point controls, storm drain inlet protection) must be complete prior to the start of all phases of construction. By the time construction activity in any given portion of the site begins, downgradient BMPs must be installed and operational to control discharges from the initial site clearing, grading, excavating, and other earth-disturbing activities. Additional BMPs shall be installed as necessary throughout the life of the project.

All BMPs shall be maintained and remain in effective operating condition during the entire duration of the project, with repairs made within the timeframes specified elsewhere in this permit, until final stabilization has been achieved. BMPs must be protected from activities that would reduce their effectiveness. Any sediment must be removed per the BMP manufacturer's instructions or before it has accumulated to one-half of the above-ground height of any BMP that collects sediment (i.e., silt fences, sediment traps, etc.). The project is considered to achieve final stabilization when Condition 5 listed below is met.

(1) Perimeter Control BMPs:
(a) Perimeter control BMPs for runoff from disturbed areas shall be installed before general site clearing is started. Note this requirement does not apply to earth disturbances related to initial site clearing and establishing entry, exit, or access of the site, which may require that stormwater controls be installed immediately after the earth disturbance.
(b) For phased projects, BMPs shall be properly installed as necessary prior to construction activities.
(c) Install sediment controls along any perimeter areas of the site that are downgradient from any exposed soil or other disturbed areas. Prevent stormwater from circumventing the edge of the perimeter control. For sites where perimeter controls are infeasible, other practices shall be implemented to minimize discharges to perimeter areas of the site.
(d) Stormwater discharges which leave the site from disturbed areas shall pass through an appropriate impediment to sediment movement such as a sedimentation basin, sediment traps (including vegetative buffers), or silt fences prior to leaving the land disturbance site.

(2) Stockpiles or Land Clearing Debris Piles of Sediment or Soil:
(a) Install a sediment barrier along all downgradient perimeter areas;
(b) Divert surface flows around stockpiles to reduce and minimize erosion of the stockpile.
(c) For piles that will be unused for 14 or more days, provide cover with appropriate temporary stabilization.
(d) It is prohibited to rinse, sweep, or otherwise place any soil, sediment, debris, or stockpiled product which has accumulated on pavement or other impervious surfaces into any stormwater conveyance, storm drain inlet, or water of the state.

(3) Sedimentation Basins:

A sedimentation basin shall be used for each drainage area with ten or more acres disturbed at one time.

(a) Sediment basins shall not be constructed in any waters of the state or natural buffer zones.

(b) Both temporary and permanent sedimentation basins shall have a stabilized spillway to minimize the potential for erosion of the spillway or basin embankment.

(c) The basin shall be maintained until final stabilization of the disturbed area served by the basin.

(d) Accumulated sediment shall not exceed 50% of total volume or as prescribed in the design, whichever is less.

(e) Dewatering:

1) Discharges from dewatering activities shall be managed by appropriate controls as specified in the SWPPP. Appropriate controls may include, but are not limited to, sediment socks, dewatering tanks, tube settlers, weir tanks, filtration systems (e.g. bag or sand filters), and passive treatment systems that are designed to remove or retain sediment.

2) Erosion controls and velocity dissipation devices (e.g., check dams, riprap, and vegetated buffers) to minimize erosion at inlets, outlets, and discharge points from shall be utilized.

3) Water with an oil sheen, or visible floating solids and foam shall not be discharged.

4) Prevent discharges to the receiving stream causing excessive visual turbidity. Visual turbidity refers to a sediment plume or other cloudiness in the water caused by sediment that can be identified by an observer.

5) Until final stabilization has been achieved, sediment basins and impoundments shall utilize outlet structures or floating skimmers that withdraw water from the surface when discharging. Under frozen conditions, it may be considered infeasible to withdraw water from the surface and an exception can be made for that specific period as long as discharges that may contain sediment and other pollutants are managed by appropriate controls. If determined infeasible due to frozen conditions, documentation must be provided in the SWPPP to support the determination, including the specific conditions or time period when this exception applies.

(4) Sediment Trackout And Sediment Transport:

Minimize sediment trackout from the site and sediment transport onto roadways.

(a) Restrict vehicle traffic to designated exit points.

(b) Use appropriate stabilization techniques or BMPs at all points that exit onto paved roads or areas outside of the site.

(c) Use additional controls or BMPs to remove sediment from vehicle and equipment tires prior to exit from facility where necessary.

(d) Any sediment or debris that is tracked out past the exit pad or is deposited on a roadway after a precipitation event shall be removed by the shorter of either the same business day (for business days only), or by the end of the next business day if track-out occurs on a non-business day, and before predicted rain events. Remove the track-out sediment by sweeping, shoveling, or vacuuming these surfaces, or by using other similarly effective means of sediment removal. Sediment or debris tracked out on pavement or other impervious surfaces shall not be disposed of into any stormwater conveyance, storm drain inlet, or water of the state.

(e) Stormwater inlets susceptible to receiving sediment or other pollutants from the permitted land disturbance site shall have curb inlet protection. This may include inlets off the active area where track out from vehicles and equipment could impact the stormwater runoff to those inlets.

(5) Concrete Washout Facilities:

Concrete washout facilities shall be used to contain concrete waste from the activities onsite, unless the washout of trucks and equipment is managed properly at an off-site location. The washout facility shall be managed to prevent solid and/or liquid waste from entering waters of the state by the following:

(a) Direct the wash water into leak-proof containers or pits designed so that no overflows can occur due to inadequate sizing or precipitation;

(b) Locate washout activities away from waters of the state, stormwater inlets, and/or stormwater conveyances where practicable. If not practicable, use BMPs to reduce risk of waste leaving the washout facility;

(c) Washout facilities shall be cleaned, or new facilities must be constructed and ready for use, once the washout is 75% full;

(d) Designate the washout area(s) and conduct such activities only in these areas.

(e) Ensure contractors are aware of the location, such as by marking the area(s) on the map or signage visible to the truck and/or equipment operators.

(6) Immediate Stabilization After Soil Disturbing Activities:

Soil disturbing activities on site that have ceased either temporarily or permanently shall initiate stabilization immediately in accordance with the options below.

(a) For soil disturbing activities that have been temporarily ceased on any portion of the site and will not resume for a period exceeding 14 calendar days:
   1) BMPs shall be constructed to establish interim stabilization;
   2) Interim stabilization must be initiated immediately and completed within 14 calendar days.

(b) For soil disturbing activities that have been permanently ceased on any portion of the site:
   1) Final stabilization of disturbed areas shall be implemented;
   2) Final stabilization must be initiated immediately and completed within 14 calendar days.

(c) If the slope of the area is greater than 3:1 (three feet horizontal to one foot vertical), then interim stabilization shall be established within seven calendar days of ceasing operations on that part of the site.

(d) Allowances to the 14-day completion period for temporary and final stabilization may be made due to weather and equipment malfunctions. The use of allowances shall be documented in the SWPPP. Allowances may be determined unnecessary after review by the Department.

(e) The following activities would constitute the immediate initiation of stabilization:
   1) Prepping the soil for vegetative or non-vegetative stabilization as long as seeding, planting, and/or installation of non-vegetative stabilization products takes place as soon as practicable;
   2) Applying mulch or other non-vegetative product to the exposed areas;
   3) Seeding or planting the exposed areas;
   4) Finalizing arrangements to have stabilization product fully installed in compliance with the deadlines for completing stabilization.

(f) Until stabilization is complete, interim sediment control shall consist of well-established and maintained BMPs that are reasonably certain to protect waters of the state from sediment pollution over an extended period of time. This may require adding more BMPs to an area than is normally used during daily operations. The types of BMPs used must be suited to the area disturbed, taking into account the number of acres exposed and the steepness of the slopes.

(g) If vegetative stabilization measures are being implemented, stabilization is considered "installed" when all activities necessary to seed or plant the area are completed. Installed does not mean established.

(h) If non-vegetative stabilization measures are being implemented, stabilization is considered "installed" when all such measures are implemented or applied. Non-vegetative stabilization shall prevent erosion and shall be chosen for site conditions, such as slope and flow of stormwater.

(i) Final stabilization is not considered achieved until vegetation has grown and established to meet the requirements below.

(7) Final Stabilization:

Prior to removal of BMPs, ceasing site inspections, and removing from the quarterly report, final stabilization must be achieved. Final stabilization shall be achieved as soon as possible once land disturbance activities have ceased. Document in the SWPPP the type of stabilization and the date final stabilization is achieved.

(a) The project is considered to have achieved final stabilization when perennial vegetation (excluding volunteer vegetation), pavement, buildings, or structures using permanent materials (e.g., riprap, gravel, etc.) cover all areas that have been disturbed. With respect to areas that have been vegetated, vegetation must be at least **70%** coverage of 100% of the vegetated areas on site. Vegetation must be evenly distributed.

(b) Disturbed areas on agricultural land are considered to have achieved final stabilization when they are restored to their preconstruction agricultural use. If former agricultural land is changing to non-agricultural use, this is no longer considered agricultural land and shall follow condition (a).

(c) If the intended function of a specific area of the site necessitates that it remains disturbed, final stabilization is considered achieved if all of the following are met:
   1) Only the minimum area needed remains disturbed (i.e., dirt access roads, motocross tracks, utility pole pads, areas being used for storage of vehicles, equipment, materials). Other areas must meet the criteria above.
   2) Permanent structural BMPs (e.g., rock checks, berms, grading, etc.) or non-vegetative stabilization measures are implemented and designed to prevent sediment and other pollutants from entering waters of the state.
   3) Inspection requirements in Part IV. SWPPP MANAGEMENT REQUIREMENT, Condition 11 are met and documented in the SWPPP.
   4) Winter weather and frozen conditions do not excuse any of the above final stabilization requirements. If vegetation is required for stabilization the permittee must maintain BMPs throughout winter weather and frozen conditions until thawing and vegetation meets final stabilization criteria above. Document stabilization attempts during frozen conditions in the SWPPP. Consider future freezing when removing vegetation and plan with temporary stabilization techniques before the ground becomes frozen.

PART VI: SITE INSPECTION REPORT
(To be Maintained by GENERAL CONTRACTOR)

Refer to page 4 in Part III. Project Planning & Design, specify the **2-year, 24-hour storm event** for the project location:

_____ inch.

Specify the notification method when stormwater runoff occurs: _____

1. Site Inspector:

Regularly scheduled inspections shall be conducted by a qualified person (an inspector). An inspector can be the environmental lead or a person trained by and directly supervised by the environmental lead. The inspector shall be knowledgeable in erosion, sediment, and stormwater control principles, and shall have knowledge of the permit, and the site's SWPPP.

2. Scope of Inspection:

Refer to **Appendix E** for the site inspection report. Site inspections shall include, at a minimum, the following:

(1) Inspect all structures that function to prevent or minimize pollution of waters of the state.
(2) For disturbed areas that have not achieved final stabilization, all installed BMPs and other pollution control measures shall be inspected to ensure they are properly installed, appear to be operational, and are working as intended to minimize the discharge of pollutants.
(3) For areas on site that have achieved either temporary or final stabilization, while at the same time active construction continues on other areas, ensure that all stabilization measures are properly installed, appear to be operational, and are working as intended to minimize the discharge of pollutants.
(4) Inspect all material, waste, borrow, and equipment storage and maintenance areas that are covered by this permit. Inspect for conditions that could lead to spills, leaks, or other accumulations of pollutants on the site.
(5) Inspect all areas where stormwater typically flows within the site, including drainage ways designed to divert, convey, and/or treat stormwater.
(6) All stormwater outfalls shall be inspected for evidence of erosion, sediment deposition, or impacts to the receiving stream. If a discharge is occurring during an inspection, the inspector must observe and document the visual quality of the discharge and take note of the characteristics of the stormwater discharge, including turbidity, color; odor; floating, settled, or suspended solids; foam; oil sheen; and other indicators of stormwater pollutants.
(7) When practicable the receiving stream shall also be inspected for a minimum of 50 feet downstream of the outfall.
(8) The perimeter of the site shall be inspected for evidence of BMP failure to ensure concentrated flow does not develop a new outfall.

3. Inspection Frequency:

All BMPs must be inspected in accordance to one of the schedules listed below. The inspection frequency shall be documented in the table below, and any changes to the frequency of inspections, including switching between the options listed below, must be documented on the inspection report:

(1) **7-day option:** at least once every seven (7) calendar days and within 48 hours after any storm event equal to or greater than a 2-year, 24-hour storm has ceased during a normal workday or within 72 hours if the rain event ceases during a non-work day such as a weekend or holiday; or
(2) **14-day option:** once every 14 calendar days and within 24 hours of the occurrence of a storm event of 0.25 inches of precipitation or greater, or the occurrence of runoff from snowmelt. To determine if a storm event of 0.25 inches or greater has occurred on the site, the permittee shall either keep a properly maintained rain gauge on site, or obtain the storm event information from a weather station near the site location.
   (a) Inspections are only required during the project's normal working hours.
   (b) An inspection must be conducted within 24 hours of a storm event which has produced 0.25 inches. The inspection shall be conducted within 24 hours of the event end, or within 72 hours if the rain event ceases during a non-work day such as a weekend or holiday.
   (c) If it is elected to inspect every 14 calendar days and there is a storm event at the site that continues for multiple days, and each day of the storm produces 0.25 inches or more of rain, the permittee shall conduct an inspection

within 24 hours of the end of the storm or within 72 hours if the rain event ceases during a non-work day such as a weekend or holiday.

Specify the inspection frequency based on the above (1) 7-Day option, or (2) 14-day option. Any changes to the frequency of inspections, including switching between the options, must be documented both here and on the inspection report:

Option	Date Implemented

(3) Areas on site that have achieved stabilization, while at the same time active construction continues on other areas, may reduce inspection frequency to monthly, for those stabilized areas, if the following conditions exist:
   (a) For areas where disturbed portions have undergone temporary stabilization, inspections shall occur at least once a month while stabilized and when re-disturbed shall follow either frequency outlined in (1) or (2) above.
   (b) Areas on site that have achieved final stabilization must be inspected at least once per month until the permit is terminated.

(4) If construction activities are suspended due to frozen conditions, the permittee may temporarily reduce site inspections to monthly until thawing conditions begin to occur if all of the following are met:
   (a) Land disturbances have been suspended; and
   (b) All disturbed areas of the site have been stabilized per BMP requirements.
   (c) The change shall be noted in the table above.

(5) Any basin dewatering shall be inspected daily when discharge is occurring. The discharge shall be observed, and dewatering activities shall be ceased immediately if the receiving stream is being impacted. These inspections shall be noted on a log or on the inspection report.

4. Site Inspection Reports:

A log of each inspection and/or copy of the inspection report shall be kept readily accessible and must be made available upon request by the Department. Electronic logs are acceptable as long as reports can be provided within 24 hours. If inspection reports are kept off site, the SWPPP must indicate where they are stored. The inspection report shall be signed by the environmental lead or designated inspector (electronically or otherwise).

(1) The inspection report is to include the following minimum information:
   (a) Inspector's name and title.
   (b) Date and time of inspection.
   (c) Observations relative to the effectiveness of the BMPs and stabilization measures. The following must be documented:
      1) Whether BMPs are installed, operational, and working as intended;
      2) Whether any new or modified stormwater controls are needed;
      3) Facilities examined for conditions that could lead to spill or leak;

4) Outfalls examined for visual signs of erosion or sedimentation at outfalls. Excessive erosion or sedimentation may be due to BMP failure or insufficiency. Response to observations should be addressed in the inspection report.

(d) Corrective actions taken or necessary to correct the observed problem.

(e) Listing of areas where land disturbance operations have permanently or temporarily stopped.

5. Inspection Follow-up

Any structural or maintenance deficiencies for BMPs or stabilization measures shall be documented and corrected as soon as possible but no more than seven (7) calendar days after the inspection.

(1) Corrective action documentation shall be stored with the associated site inspection report.

(2) Immediately take all reasonable steps to address the condition, including cleaning up any contaminated surfaces so the material will not discharge in subsequent storm events.

(3) If weather conditions or other issues prevent correction of BMPs within seven calendar days, the reasons for the delay must be documented (this may include pictures) and there must be a narrative explaining why the work cannot be accomplished within the seven-day time period. The problem shall be corrected as soon as weather conditions or issues allow.

(4) Corrective actions may be required by the Missouri Department of Natural Resources. The site operator must comply with any corrective actions required by the Department as a result of permit violations found during an inspection.

Appendix A – SWPPP Update and Modification Log

SWPPP UPDATE & MODIFICATION LOG

(To be completed, when necessary, during design modification or construction)

Create a log here of the changes and updates to the SWPPP. You should include additions of new BMPs, significant changes in the activities or their timing on the project, changes in personnel, changes in inspection and maintenance procedures, and updates to the SITE MAP, etc.

Summary of Content Updates	Date

Appendix B – Public Notification Sign

Appendix C – General Location Map

Attach the General Location Map

Appendix D – Site Map(s)

SITE MAP REQUIREMENTS:

The first should show the undeveloped site and its current features. An additional map or maps should be created to show the developed site. These maps should include the following:

- ☐ Site boundaries of the property;
- ☐ Locations of all waters of the state (including wetlands) within the site and half a mile downstream of the site's outfalls;
- ☐ Location of all outfalls;
- ☐ Location of stormwater inlets and conveyances including ditches, pipes, man-made conduits, and swales;
- ☐ Areas of soil disturbance and areas that will not be disturbed (or a statement that all areas of the site will be disturbed unless otherwise noted);
- ☐ Locations of on-site and off-site material, waste, borrow, concrete washout facility, disposal of the material removed from sediment basins, equipment storage areas and stockpiles;
- ☐ Designated points where vehicles will exit the site;
- ☐ Location of structural and non-structural BMPs, including natural buffer areas, identified in the SWPPP;
- ☐ Direction(s) of stormwater flow (use arrows) and approximate slopes before and after grading activities;
- ☐ Location and timing of stabilization measures;
- ☐ Areas where final stabilization has been achieved;
- ☐ Change of a drainage course; and
- ☐ The sloped areas for all phases of the project.

Attach SITE MAPs.

Appendix E – Site Inspection Reports

Instructions

Using the Inspection Report

This inspection report is designed to be customized according to the BMP's and conditions at your site. For ease of use, you should take a copy of your site plan and number all of the stormwater BMPs and areas of your site that will be inspected. A brief description of the BMP or area should then be listed in the site-specific section of the inspection report. For example, specific structural BMPs such as construction site entrances, sediment ponds, or specific areas with silt fence (e.g., silt fence along Main Street; silt fence along slope in NW corner, etc.) should be numbered and listed. You should also number specific non-structural BMPs or areas that will be inspected (such as trash areas, material storage areas, temporary sanitary waste areas, etc.).

You can complete the items in the "General Information" section that will remain constant, such as the project name, NPDES tracking number, and inspector (if you only use one inspector). Print out multiple copies of this customized inspection report to use during your inspections.

When conducting the inspection, walk the site by following your SITE MAP and numbered BMPs/areas for inspection.

Also note whether the overall site issues have been addressed (customize this list according to the conditions at your site). Note any required corrective actions and the date and responsible person for the correction in the Corrective Action Log.

Stormwater Construction Site Inspection Report

General Information			
Project Name:			
NPDES Tracking No.:		**Location:**	
Date of Inspection:		**Start/End Time:**	
Inspector's Name(s):			
Inspector's Title(s):			
Inspector's Contact:			
Inspector's Qualifications:			
Describe present phase of construction:			
Type of Inspection: ☐ Regular - ☐ 7-day, ☐ 14-day ☐ Pre-storm Event ☐ During Storm Event ☐ Post-storm Event			
Weather Information			
Has there been a storm event since the last inspections? ☐ **Yes** ☐ **No**			
If yes, provide: Storm Start Date & Time Storm Durations (hrs) Approximate Amount of Precipitation (in.)			
Weather at time of this Inspection? ☐ Clear ☐ Cloudy ☐ Rain ☐ Sleet ☐ Fog ☐ Snowing ☐ High Winds ☐ Other: Temperature:			
Have any discharges occurred since the last inspection?	☐ Yes ☐ No		
If yes, describe:			
Are there any discharges at the time of inspection?	☐ Yes ☐ No		
If yes, describe the visual quality of the discharge including turbidity; color; odor; floating, settled, or suspended solids; foam; oil sheen; and other indictors of stormwater pollutants:			

Site-specific BMPs

- Number the structural and non-structural BMPs identified in your SWPPP on your SITE MAP and list them below (add as many BMPs as necessary). Carry a copy of the numbered SITE MAP with you during your inspections. This list will ensure that you are inspecting all required BMPs at your site.
- Describe corrective actions initiated, date completed, and note the person that completed the work in the Corrective Action Log.

	BMP	BMP Installed Properly?	BMP Maintenance Required?	Corrective Action Needed and Notes
1		☐ **Yes** ☐ **No**	☐ **Yes** ☐ **No**	
2		☐ **Yes** ☐ **No**	☐ **Yes** ☐ **No**	
3		☐ **Yes** ☐ **No**	☐ **Yes** ☐ **No**	
4		☐ **Yes** ☐ **No**	☐ **Yes** ☐ **No**	
5		☐ **Yes** ☐ **No**	☐ **Yes** ☐ **No**	
6		☐ **Yes** ☐ **No**	☐ **Yes** ☐ **No**	
7		☐ **Yes** ☐ **No**	☐ **Yes** ☐ **No**	

8		☐ **Yes** ☐ **No**	☐ **Yes** ☐ **No**	
9		☐ **Yes** ☐ **No**	☐ **Yes** ☐ **No**	
10		☐ **Yes** ☐ **No**	☐ **Yes** ☐ **No**	
11		☐ **Yes** ☐ **No**	☐ **Yes** ☐ **No**	
12		☐ **Yes** ☐ **No**	☐ **Yes** ☐ **No**	
13		☐ **Yes** ☐ **No**	☐ **Yes** ☐ **No**	
14		☐ **Yes** ☐ **No**	☐ **Yes** ☐ **No**	
15		☐ **Yes** ☐ **No**	☐ **Yes** ☐ **No**	
16		☐ **Yes** ☐ **No**	☐ **Yes** ☐ **No**	
17		☐ **Yes** ☐ **No**	☐ **Yes** ☐ **No**	
18		☐ **Yes** ☐ **No**	☐ **Yes** ☐ **No**	
19		☐ **Yes** ☐ **No**	☐ **Yes** ☐ **No**	
20		☐ **Yes** ☐ **No**	☐ **Yes** ☐ **No**	

Overall Site Issues

Below are some general site issues that should be assessed during inspections. Customize this list as needed for conditions at your site.

	BMP/activity	**Implemented?**	**Maintenance Required?**	**Corrective Action Needed and Timeline Requirements**
1	Are all slopes and disturbed areas not actively being worked properly stabilized?	☐ **Yes** ☐ **No**	☐ **Yes** ☐ **No**	
2	Are natural resource areas (e.g., streams, wetlands, mature trees, etc.) protected with barriers or similar BMPs?	☐ **Yes** ☐ **No**	☐ **Yes** ☐ **No**	
3	Are perimeter controls and sediment barriers adequately installed (keyed into substrate) and maintained?	☐ **Yes** ☐ **No**	☐ **Yes** ☐ **No**	
4	Are discharge points free of sediment deposition, erosion, or impacts on the receiving stream?	☐ **Yes** ☐ **No**	☐ **Yes** ☐ **No**	
5	If practicable, is the receiving stream (including 50 ft or more downstream) free from the impact of the discharge points?	☐ **Yes** ☐ **No**	☐ **Yes** ☐ **No**	
5	Are storm drain inlets properly protected?	☐ **Yes** ☐ **No**	☐ **Yes** ☐ **No**	
6	Is the construction exit equipped to prevent sediment from being tracked out?	☐ **Yes** ☐ **No**	☐ **Yes** ☐ **No**	

7	Is trash, litter or other type of waste on site properly handled?	☐ **Yes** ☐ **No**	☐ **Yes** ☐ **No**	
8	Are washout facilities (e.g., paint, stucco, concrete) available, clearly marked, and maintained?	☐ **Yes** ☐ **No**	☐ **Yes** ☐ **No**	
9	Are vehicle and equipment fueling, cleaning, storage and maintenance areas free of spills, leaks, or any other deleterious material?	☐ **Yes** ☐ **No**	☐ **Yes** ☐ **No**	
10	Are materials that are potential stormwater contaminants stored inside or under cover?	☐ **Yes** ☐ **No**	☐ **Yes** ☐ **No**	
11	Are non-stormwater discharges (e.g., wash water, dewatering) properly controlled?	☐ **Yes** ☐ **No**	☐ **Yes** ☐ **No**	
12	(Other)	☐ **Yes** ☐ **No**	☐ **Yes** ☐ **No**	

Non-Compliance

CERTIFICATION STATEMENT

"I certify under penalty of law that this document and all attachments were prepared under my direction or supervision in submitted. Based on my inquiry of the person or persons who manage the system, or those persons directly responsible for gathering the information, the information submitted is, to the best of my knowledge and belief, true, accurate, and complete. I am aware that there are significant penalties for submitting false information, including the possibility of fine and imprisonment for knowing violations."

Print name and title: _____

Signature: _____ Date: _____

Appendix F – City's Construction General Permit & Additional Information