City of Kansas City, Missouri
Water Services Department
Wes Minder, P.E., Director

Project Manual

FOR

PROJECT/CONTRACT NO. 81000691/1545

I/I REDUCTION:
LINE CREEK ROCK CREEK AREAS 3 & 4

BIDDER/ADDRESS

Company _____
Contact _____
Address _____
_____

Phone _____
Fax _____
Email _____
_____

Project Manager: Nicki Chestnut
Telephone: (816) 283-3456
Email: nchestnut@tb-engr.com

CITY OF FOUNTAINS
HEART OF THE NATION
KANSAS CITY
MISSOURI

ADDENDUM NUMBER 1

Project Number 81000691

Project Title I/I Reduction: Line Creek/Rock Creek Areas 3 & 4

ISSUE DATE: **May 23, 2022**

Bidders are hereby notified that the Bidding and Contract Documents for the above project, for which Bids are to be received on **June 7, 2022**, are amended as follows:

Information to Bidders The following is provided to Bidders for information only:

1. Pre-Bid Attendance
2. Pre-Bid PowerPoint presentation

Q1.	How closely do we have to follow the KCMO Public Works Department Standard Drawing SR-1 for this project?
A1.	**The current SR-1 as found in the City of Kansas City Public Works Standard Drawings should be followed as directed in Specification 02575. The SR-1 detail inserted into the Project Manual after Section 02575 is being deleted by this Addendum as it was out of date. Please use the current SR-1 referenced in Specification 02575 and found in the Kansas City Public Works Standard Drawings.**
Q2.	Looking at rates for following SR-1, do you have ages of the asphalt of streets because cost could vary per square foot?
A2.	**KC Water does not have access to data on age of asphalt streets.**
Q3.	Have the affected homeowners been notified of the planned work and potential conflicts of work on their property?
A3.	**Potential property conflicts with the scheduled rehab work were identified during design and are expected to be addressed early in construction by the Contractor with assistance from the City as needed. The City will hold a public meeting for all property owners and residences in the project area prior to construction start.**
Q4	A Bidder stated that the 12%MBE and 12%WBE participation goals may be very hard to meet for this project.
A4.	**All bidders will need to make their best good faith efforts to meet the set project participation goals. If unable to obtain them, proof of best faith efforts will need to be provided.**
Q5	Can you share MoDOT contact information to obtain necessary permits for any work within the MoDOT right of way?
A5.	**Refer to Specification 00800 OCP CD Supplementary Conditions, SC-6.09. Article 6, Paragraph 6.09, Permits, Subparagraph A. Contractor shall contact MoDOT Kansas City Area District Engineer, Chris Redline, to secure a permit prior to performing any work in MoDOT ROW.**
Q6	If homeowner(s) objection to scheduled work being performed on their property delays construction, is there consideration of extending Achievement of Full Operation (AFO)/ Substantial Completion dates?
A6.	**This will be evaluated on a case-by-case basis. Refer to Specification 00700 OCP Consent Decree General Conditions, Article 12, Paragraph 12.03. Proof Required to Justify an Extension of Time For**

	Excusable and Compensable Delays.
Q7	Do we have any video of sewer that will be available?
A7.	**No, video is currently unavailable to bidders.**
Q8	Which version of the SR1 is to be used?
A8.	**The current SR-1 found within the Kansas City Public Works Standard Drawings.**
Q9	Brushing up of services for T liner that has previously lined pipe, do you have a quantity?
A9.	**The pipe segments that have been previously lined and are requiring full wrap lateral connection liners are shown in the rehabilitation schedule and tables. Brushing of these services prior to installation of the lateral liner are not specifically required in the Contract Documents and would be considered subsidiary to the lateral liner installation if deemed necessary and performed by the contractor.**
Q10	Break out paved and unpaved laterals on 00412?
A10.	**Refer to revised Specification 00412 Adjustment Unit Prices and Revised Specification 01270 Adjustment Unit Price and Measurement Procedures.**
Q11	Does Public Works have a street resurfacing schedule available for project coordination?
A11.	**Planned and current project resurfacing data is available for public access in the City's Parcel Viewer: Go to "Projects" drop down in upper right corner of map, then select the checkbox "Street Resurfacing". Planned and completed overlays and microsurfacing are shown.**
Q12	Can you provide the manhole and sewer rehab schedules in Excel format?
A12.	**Yes, the Manhole Rehabilitation Schedule and Sewer Main and Lateral Rehabilitation Schedule will be provided in the form of an Excel spreadsheet upon written e-mail request from bidder to the Project Manager, Nicki Chestnut.**
Q13	Is there any flow data available for 18" – 24" sewer lines scheduled for rehab?
A13.	**If you are interested in flow data for a specific line segment(s), send an email with the asset ID number(s) to the Project Manager, Nicki Chestnut, to see if there is dry weather flow data available to share.**

Bidding Requirements

1. Delete and replace the following section(s):
    a. Delete Specification 00412 and replace with the attached Specification 00412;
    b. Delete Specification 01270 and replace with the attached Specification 01270;
2. Delete the following:
    a. Delete the SR-1 attachment following Specification 02575. Current Drawing SR-1 from the City of Kansas City Public Works Standard Drawings and referenced within Specification 02575, should be utilized.

NOTE: Bidders must acknowledge receipt of this Addendum by listing the number and date, where provided, on the Bid Form - Document 00410.

CITY OF FOUNTAINS
HEART OF THE NATION
KANSAS CITY
MISSOURI

Pre-Bid Conference Attendance List

Project No. 8100069 – *Line Creek Rock Creek Areas 3 & 4*

Microsoft TEAMS
Day/Date **Thursday, May 12, 2022** Time **11 AM** X Mandatory ❒Optional

Name	Organization	Phone Number	E-Mail Address
Cary Shaw	SAK	636-233-9621	cashaw@sakcon.com
Jamie Driskell	BMcD		jdriskell@burnsmcd.com
Nicki Chestnut	Taliaferro & Browne		nchestnut@tb-engr.com
Gene Millsap	Havens		gmillsap@havensco.com
Brian Hess	KCMO		Brian.hess@kcmo.org
Jonathan Hoflander	Olsson		jhoflander@olsson.com
Mike Akins	She Digs It		mike@shedigsit.com
Nate Morgan	Infrastructure Solutions		nmorgan@i-solutionsllc.com
Taylor Jurgens	Olsson		tjurgens@olsson.com
Kyle Tonjes	BMcD		kltonjes@burnsmcd.com
Rajan Vasudevan	Jacobs		rajan.vasudevan@jacobs.com
Matt Boggs	Municipal Pipe Tool		mattb@munipipe.com
John Bennett	Havens		jbennett@havensco.com
Tina Hawes	KCMO		Tina.hawes@kcmo.org
Julie McNiff	Jacobs		julie.mcniff@jacobs.com
Justin Bolsenga	Havens		jbolsenga@havensco.com

I/I REDUCTION: LINE CREEK / ROCK CREEK AREAS 3 & 4 MANDATORY PRE-BID MEETING

Project # 81000691; Contract # 1545

May 12, 2022

smartsewer

INNOVATION & INFRASTRUCTURE TO LAST A LIFETIME

AGENDA

- Introductions
- Project Description
- General Requirements
  - Bid Date/Time
  - MBE/WBE Goals
  - Instructions to Bidders
  - Bid Structure
  - Contract Schedule
- Technical Discussion
  - Area 3
  - Area 4
- Questions

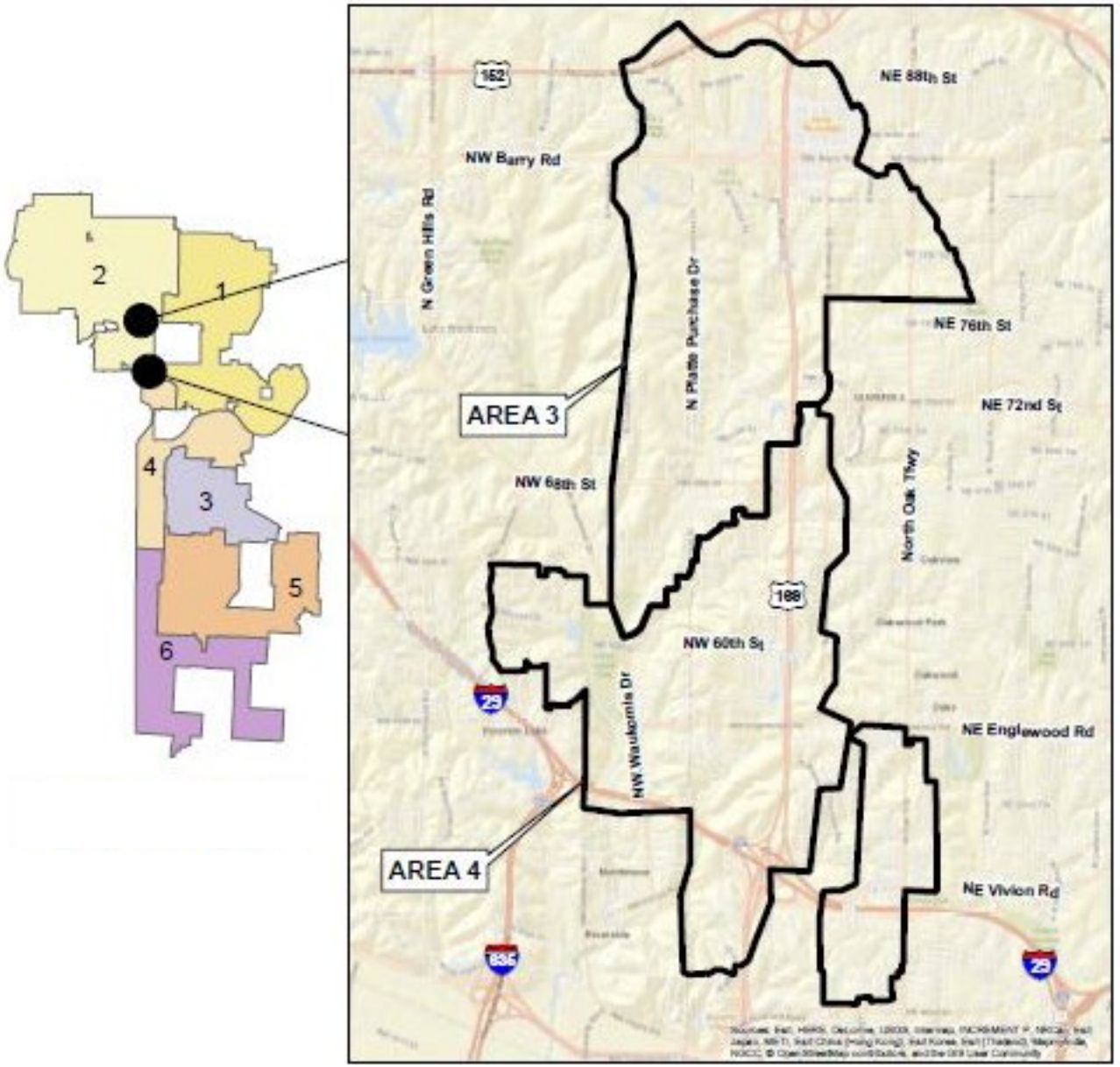

INTRODUCTIONS

- Project Manager: Nicki Chestnut
  - Phone: (816) 283-3456
  - Email: nchestnut@tb-engr.com
- Contract Administrator: Jamie Driskell
  - Phone: (816) 652-2927
  - Email: jdriskell@burnsmcd.com
- Design Professional (Olsson): Jonathan Hoflander
  - Phone: (816) 442-6015
  - Email: jhoflander@olsson.com
- Design Professional (Jacobs): Rajan Vasudevan
  - Phone: (816) 533-7316
  - Email: Rajan.Vasudevan@jacobs.com

KC smart sewer

PROJECT DESCRIPTION

- This Project is associated with the Federal Consent Decree regarding the City of Kansas City, Missouri Overflow Control Plan.
- Primarily focused on rehabilitation of manholes, sewers ranging from 8-inch to 24-inches in diameter, and sewer laterals.
- Work efforts includes:
  - Sewer Cleaning and Pre-and Post-construction CCTV inspection
  - Rehabilitation of existing sewer mains using cured-in-place pipe (CIPP) methods
  - Total line replacement of sewers
  - Open cut main line point repairs
  - CIPP service connection and lateral lining repairs
  - Open cut service connection repairs
  - Manhole rehabilitation and replacements

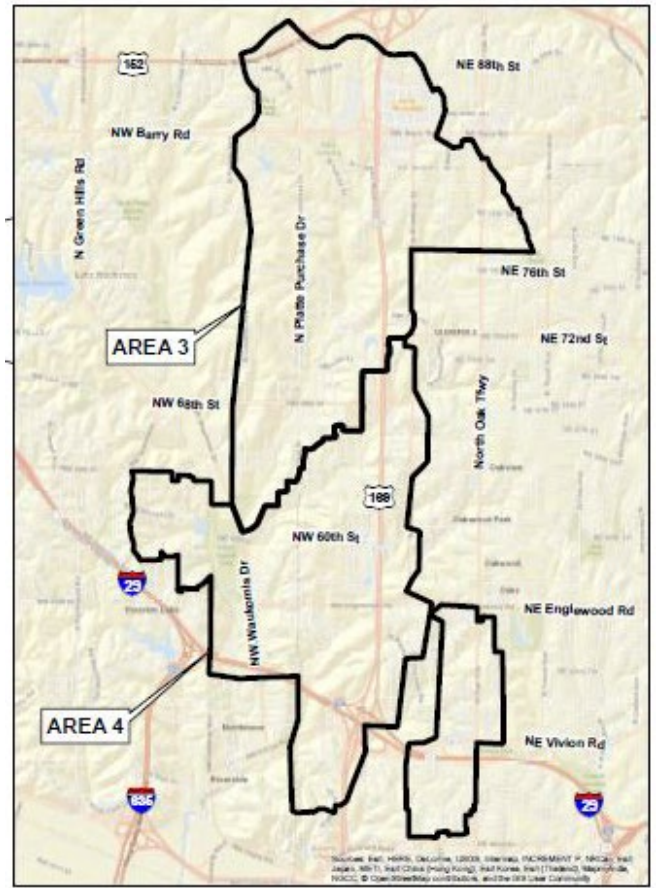

smart sewer

GENERAL REQUIREMENTS

- Bid Date and Time: June 7, 2022 at 2:00PM
  - 4800 East 63rd Street, KCMO 64130 @ the east loading dock
- MBE 12% WBE 12%
- Form 00210-Instruction to Bidders
  - 00410.01 Experience Reference Summary
  - Affidavit of Compliance with the Federal Consent Decree
- Bid Structure
  - Base Bid
  - Lump Sum with $300k Allowance
  - Escalation clauses included in Section 00210-Instructions to Bidders and 00800-Supplementary Conditions related to material cost increases from the bid date to within 90 calendar days following the NTP.
- Project Schedule
  - Anticipated NTP: September 2022
  - Anticipated AFO: September 2023 (360 Calendar Days)
  - Anticipated Final Completion: December 2023 (90 Calendar Days)

KC smart sewer

TECHNICAL DISCUSSION

smartsewer

INNOVATION & INFRASTRUCTURE TO LAST A LIFETIME

AREA 3

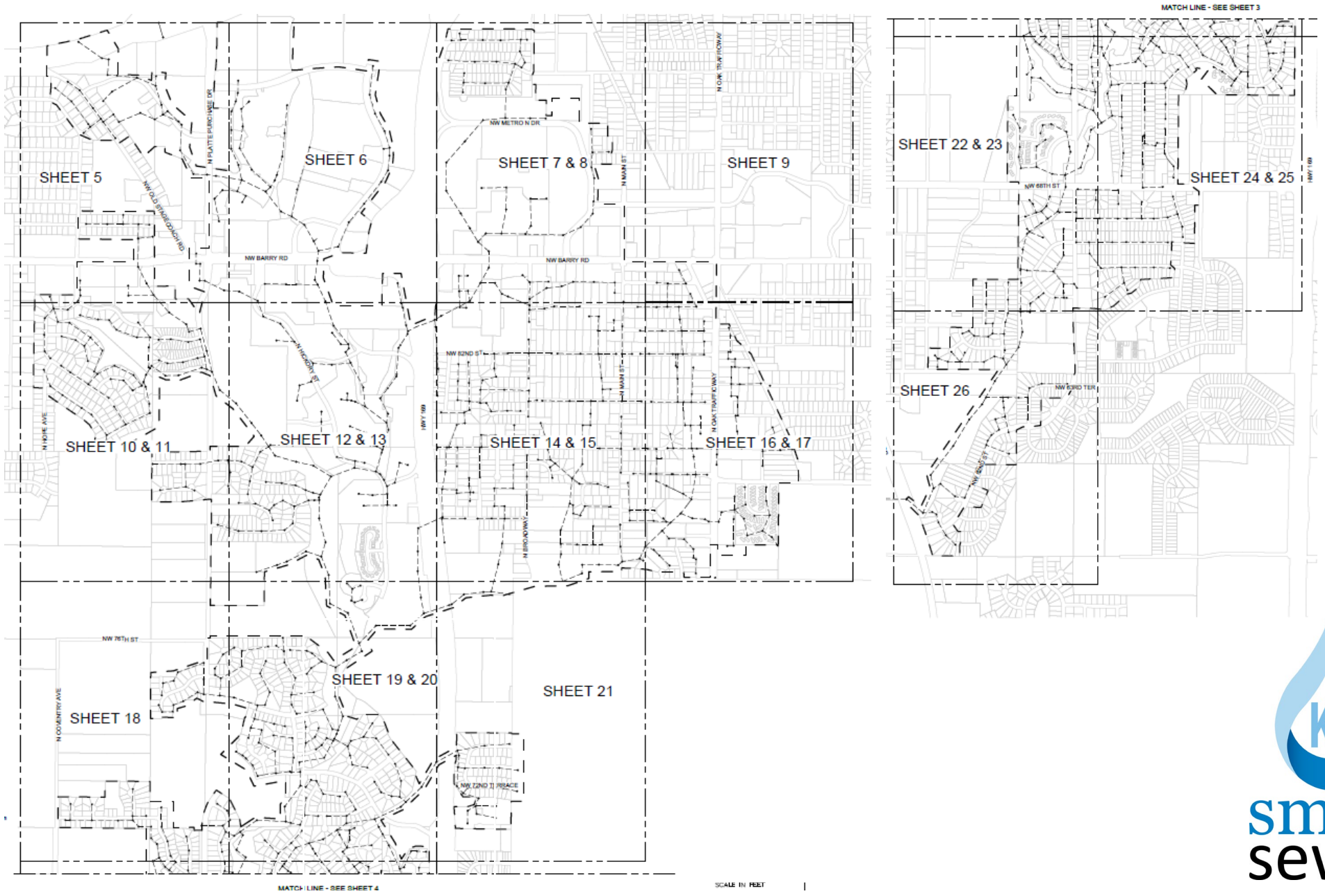

smart sewer

TECHNICAL DISCUSSION – AREA 3: WORK IN OR NEAR MODOT ROW

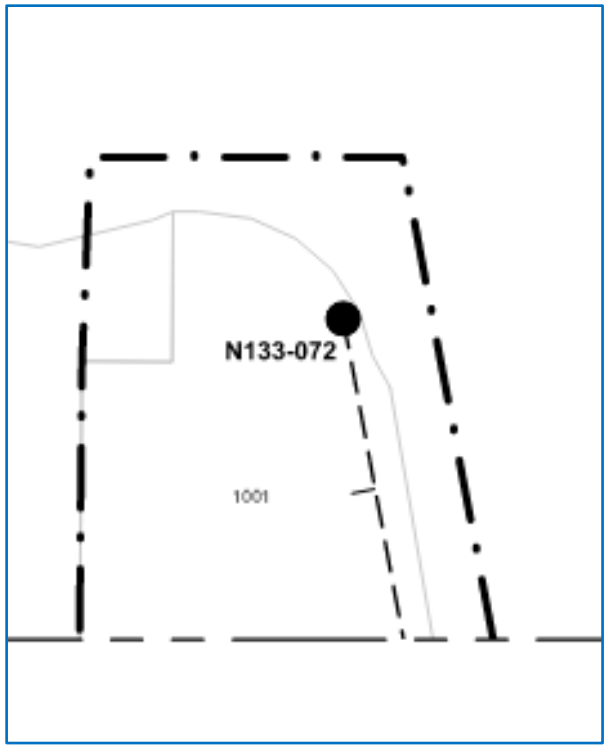

Sheet 6
MH N133-072 – Frame and Cover Replacement near Highway 169 ROW

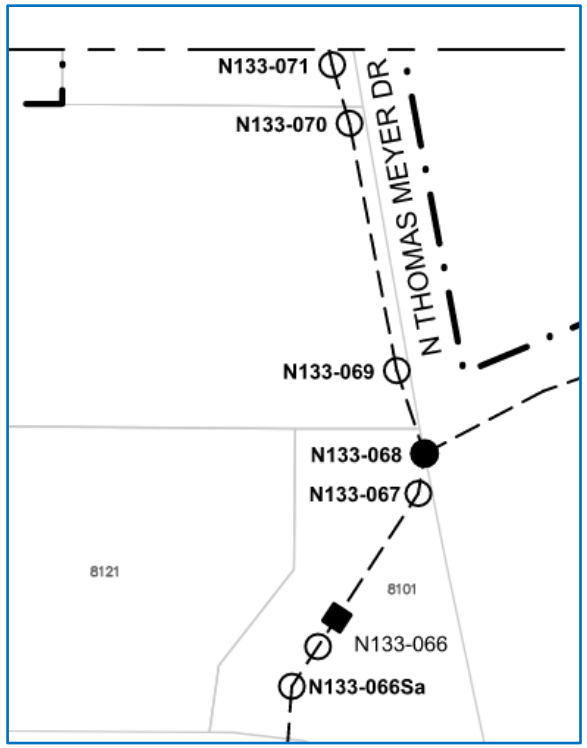

Sheet 12
MH N133-068 – Cementitious Lining near Highway 169 ROW

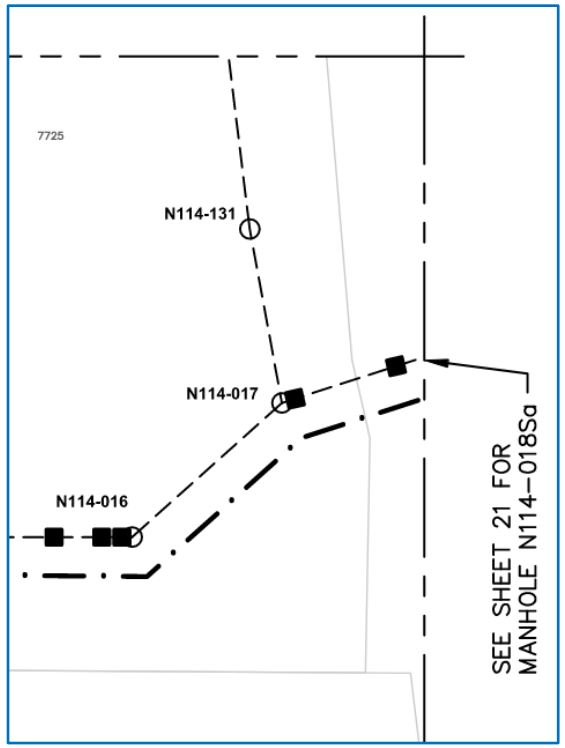

Sheet 19
Segment N114-018Sa to N114-017 – Open cut point repair in Highway 169 ROW

smart sewer

TECHNICAL DISCUSSION – AREA 3: WORK IN OR NEAR MODOT ROW

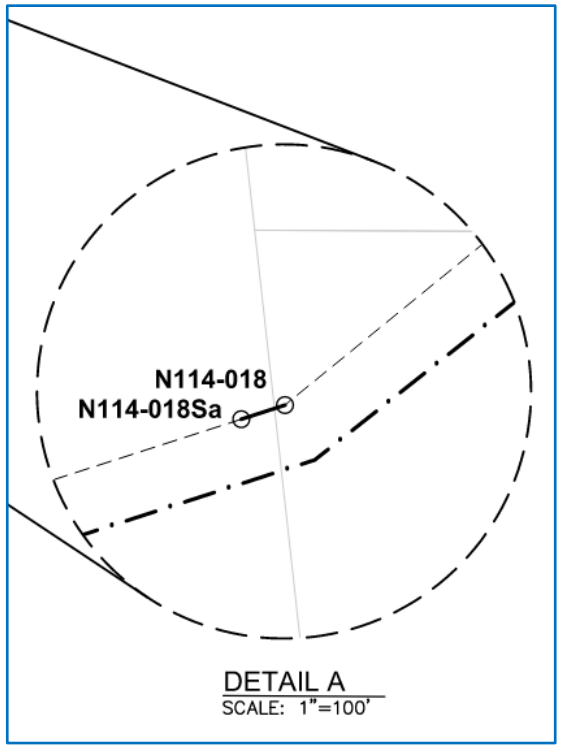

Sheet 21
Segment N114-018 to N114-018Sa – CIPP Main Lining in Highway 169 ROW

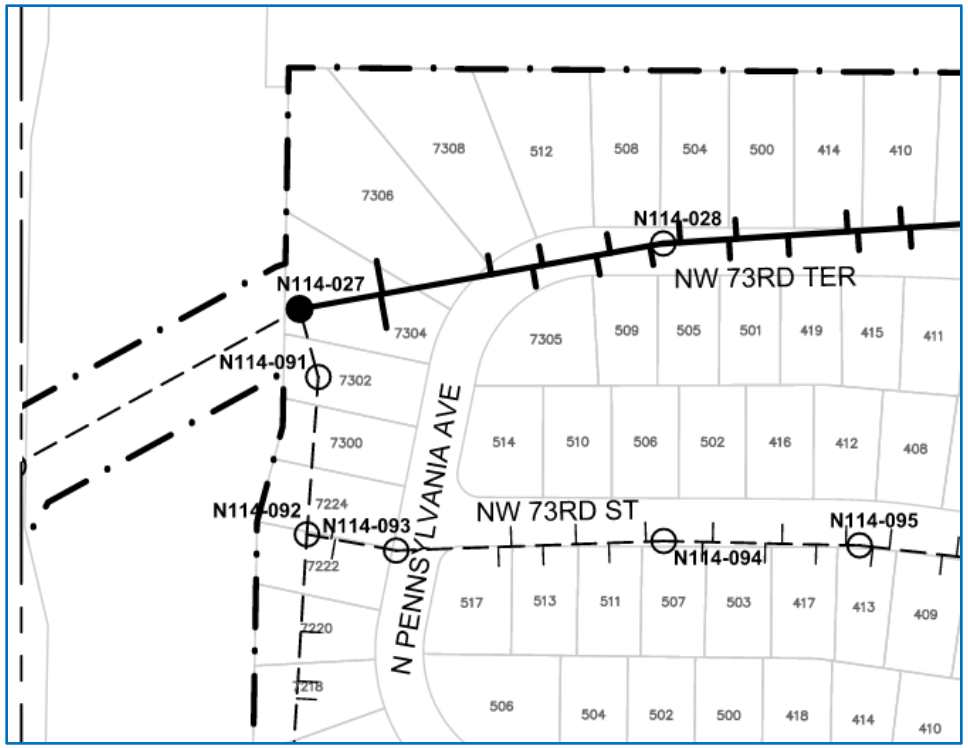

Sheet 21
Segment N114-028 to N114-027 – CIPP Main Lining near Highway 169 ROW

Sheet 21
MH N114-027 – Cementitious Lining near Highway 169 ROW

smart sewer

TECHNICAL DISCUSSION – AREA 3: WORK NEAR CREEKS

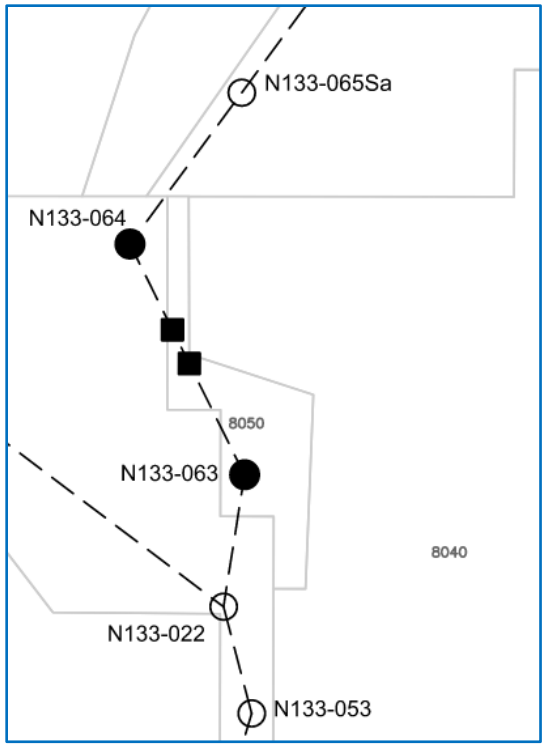

Sheet 12
Segment N133-064 to N133-063 – Open cut point repairs near creek

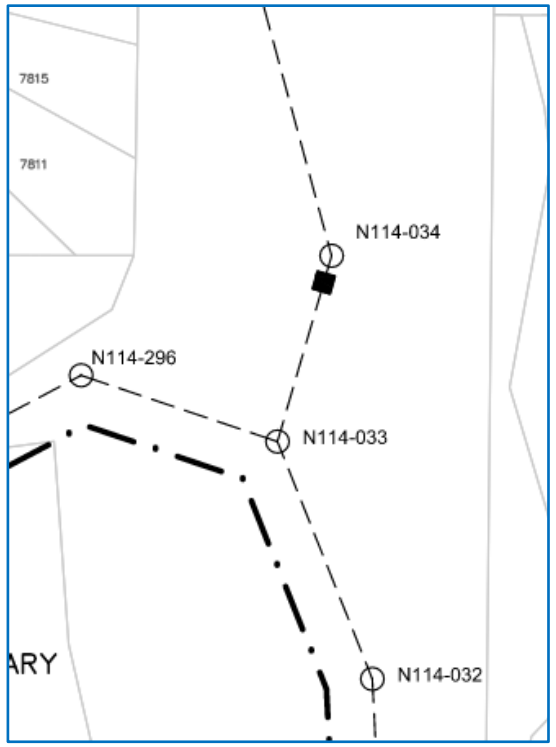

Sheet 12
Segment N114-034 to N114-033 – Open cut point repair near creek

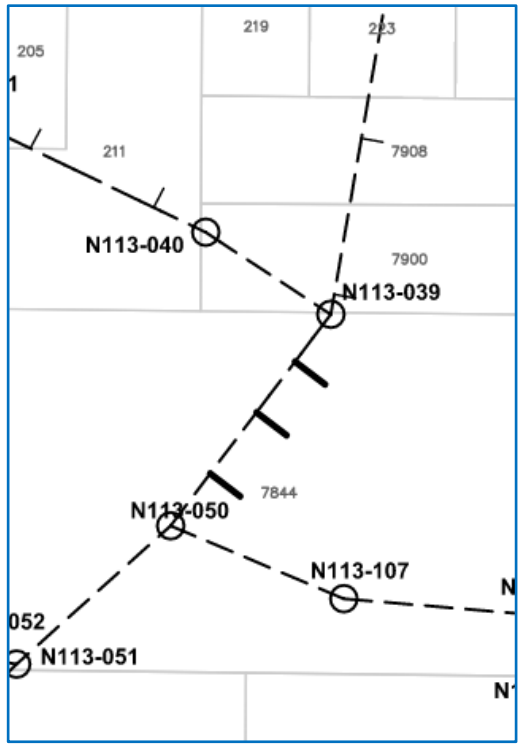

Sheet 16
Segment N113-039 to N113-050 – CIPP full wrap short liners with MHs near creek

smart sewer

TECHNICAL DISCUSSION – AREA 3: WORK NEAR CREEKS

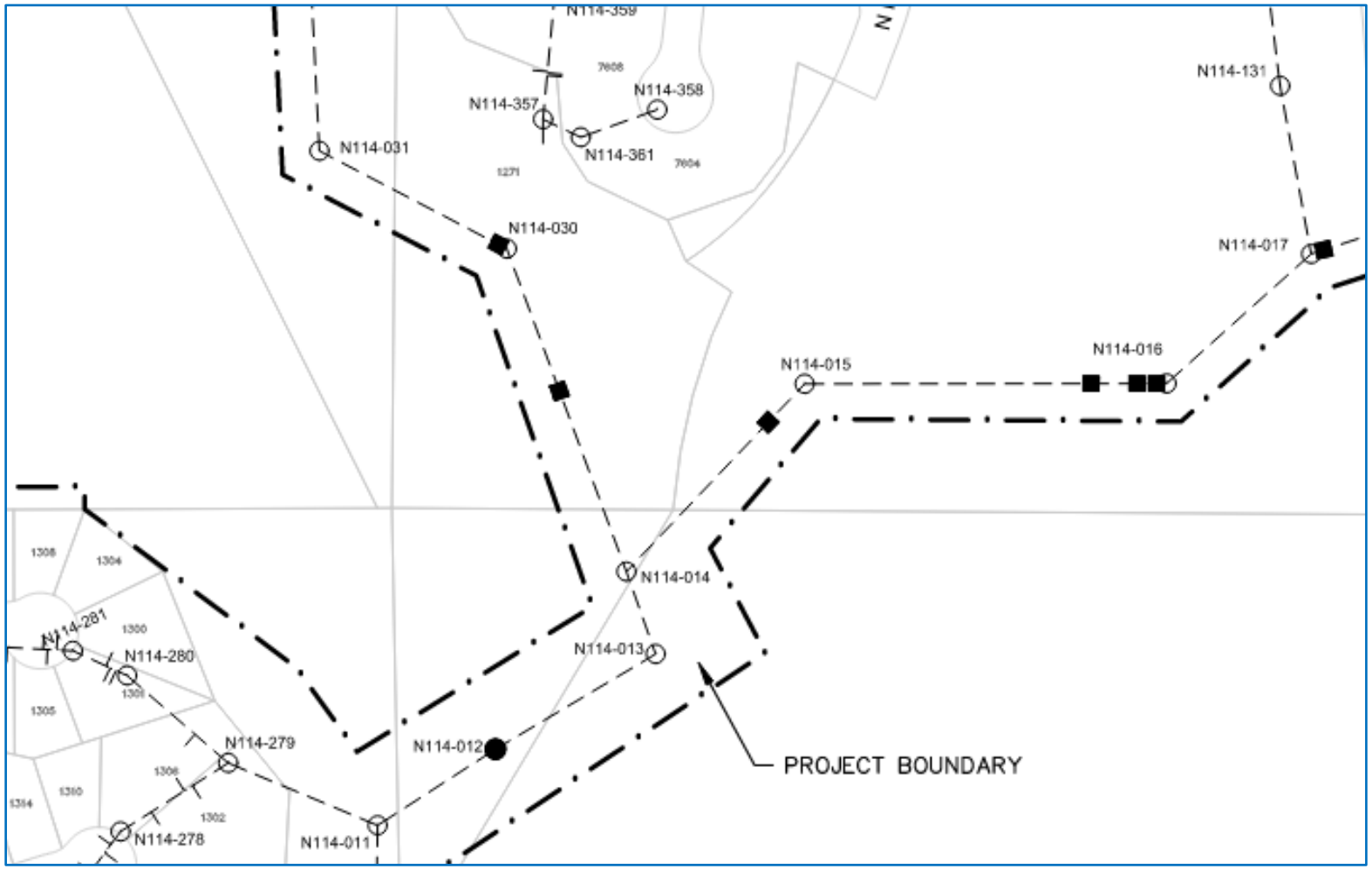

Sheet 19

Segment N114-031 to N114-030 – Open cut point repair near creek

Segment N114-030 to N114-014 – Open cut point repair near creek

Segment N114-016 to N114-015 – Open cut point repairs near creek

Segment N114-015 to N114-014 – Open cut point repair near creek

smart sewer

AREA 4

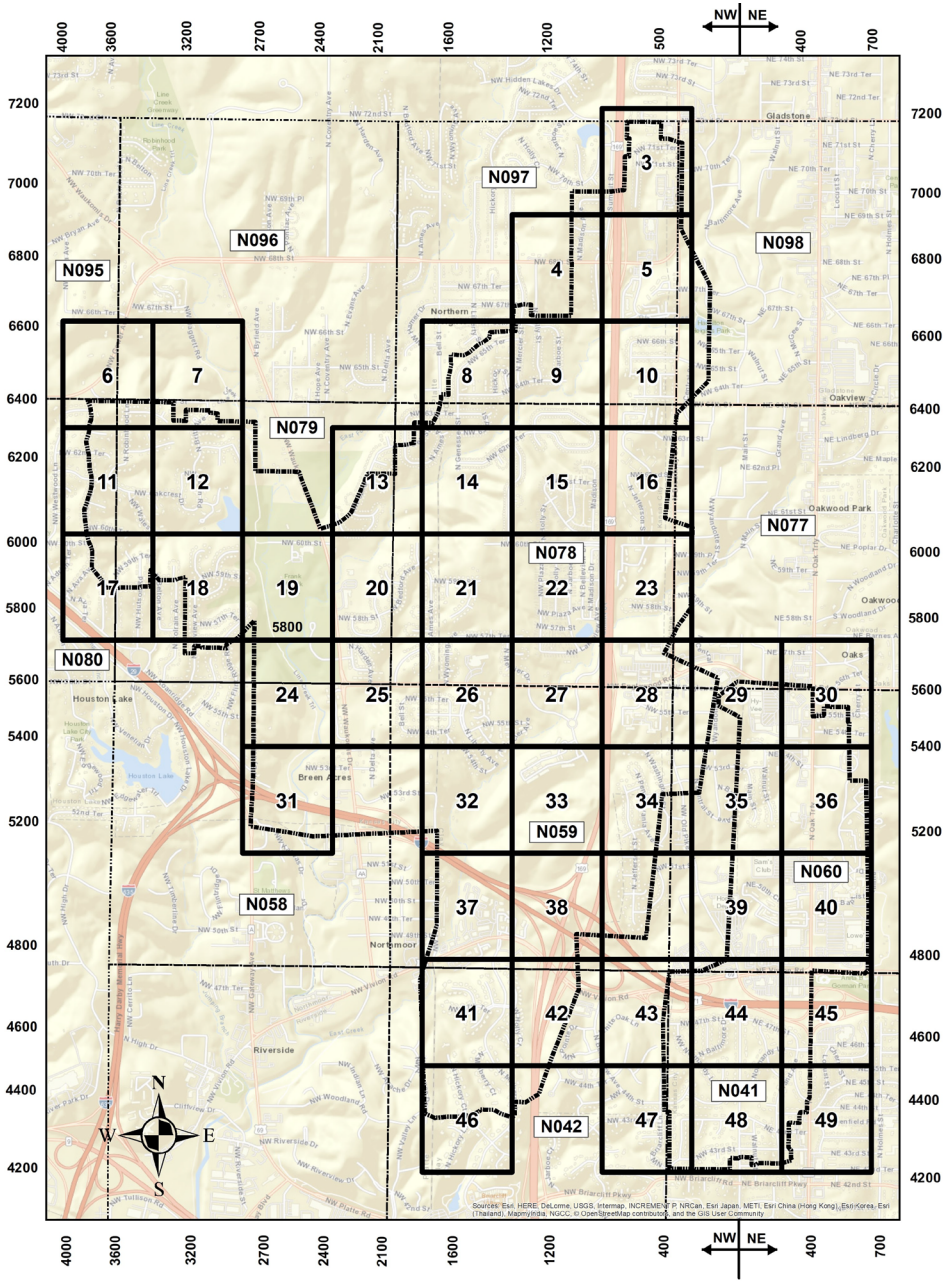

smart sewer

TECHNICAL DISCUSSION – AREA 4: WORK IN OR NEAR MODOT ROW

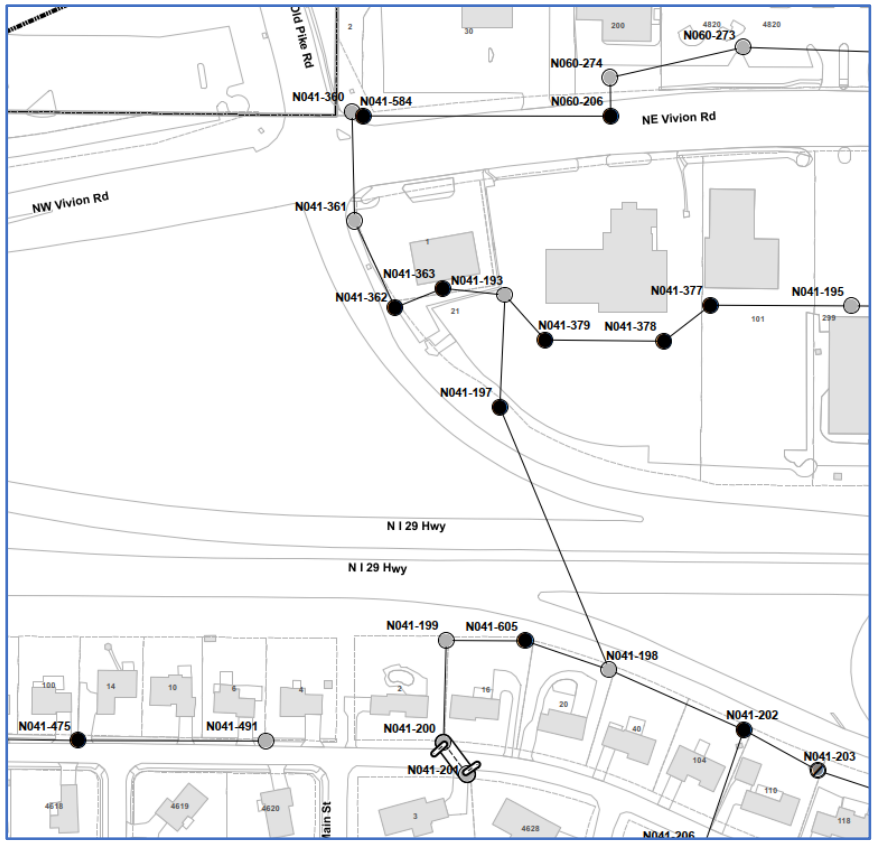

Sheet 45
Manhole Rehabilitations on I-29 ROW

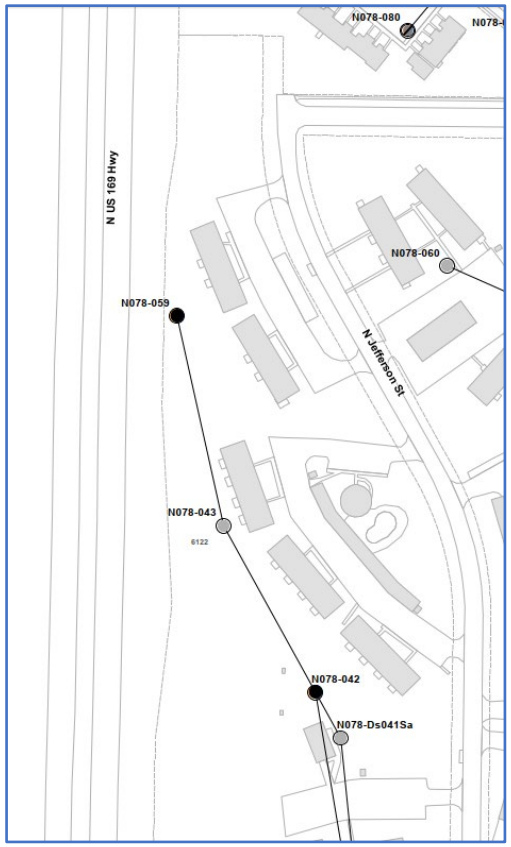

Sheet 16
Manhole Rehabilitation near Highway 169 ROW

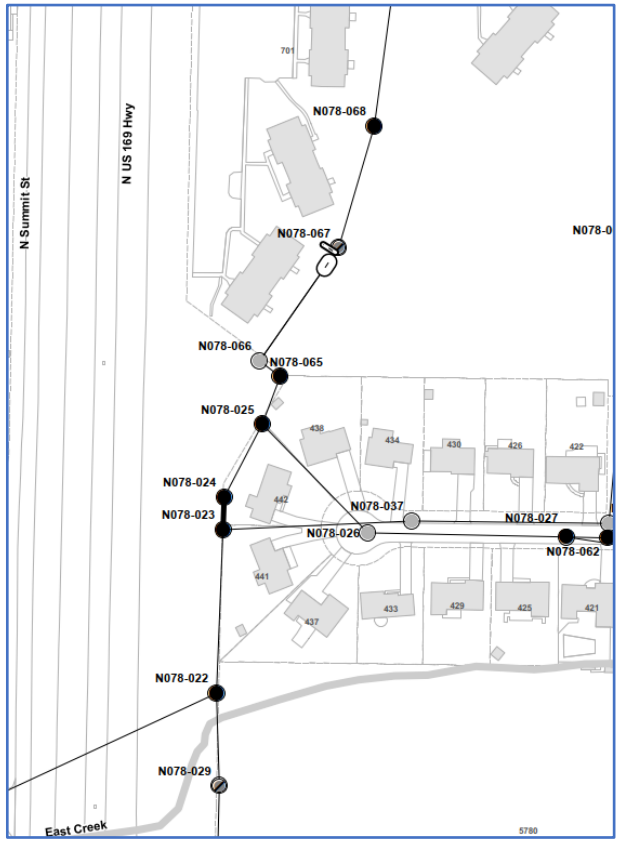

Sheet 23
Manhole Rehabilitation near Highway 169 ROW

smart sewer

TECHNICAL DISCUSSION – AREA 4: WORK NEAR CREEKS

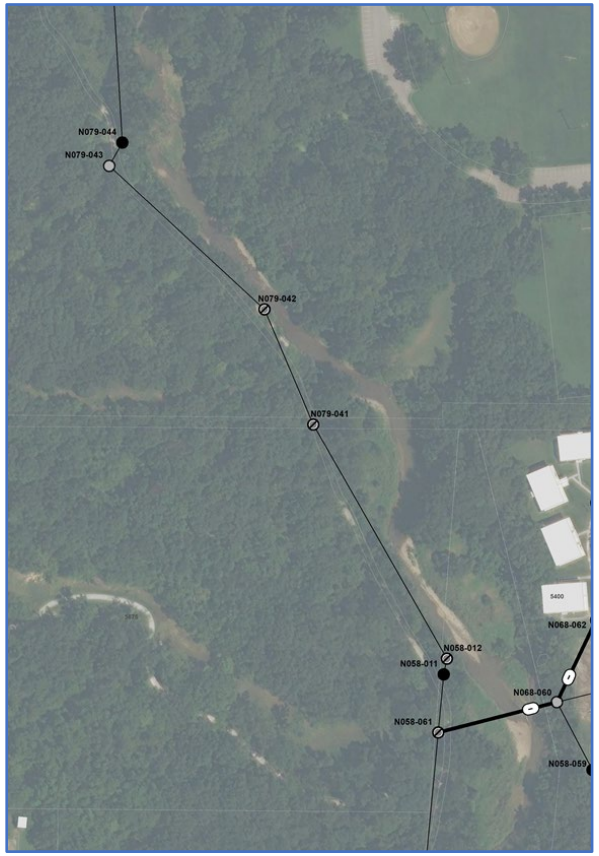

Sheet 24

Manhole Rehabilitation, Point Repair and CIPP near Creek. Limited access but near walking trail.

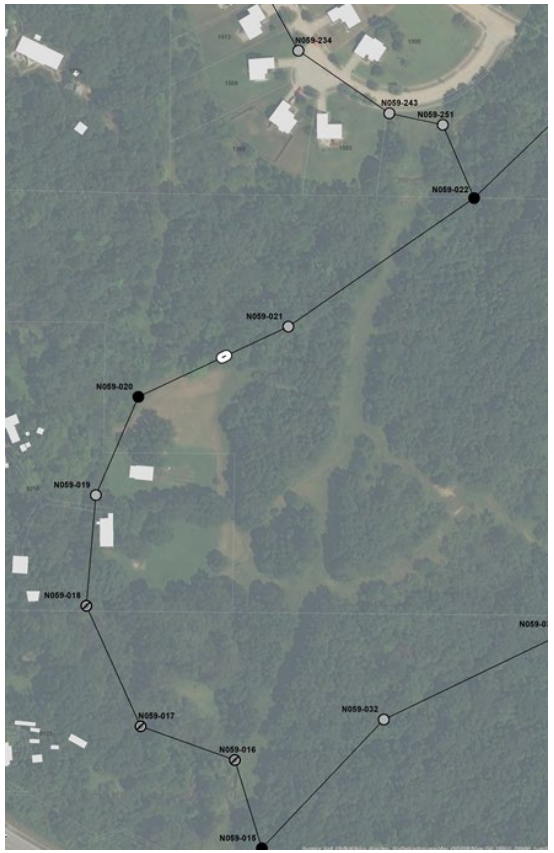

Sheet 32

Manhole Rehabilitation Creek. Limited access.

smart sewer

TECHNICAL DISCUSSION – AREA 4

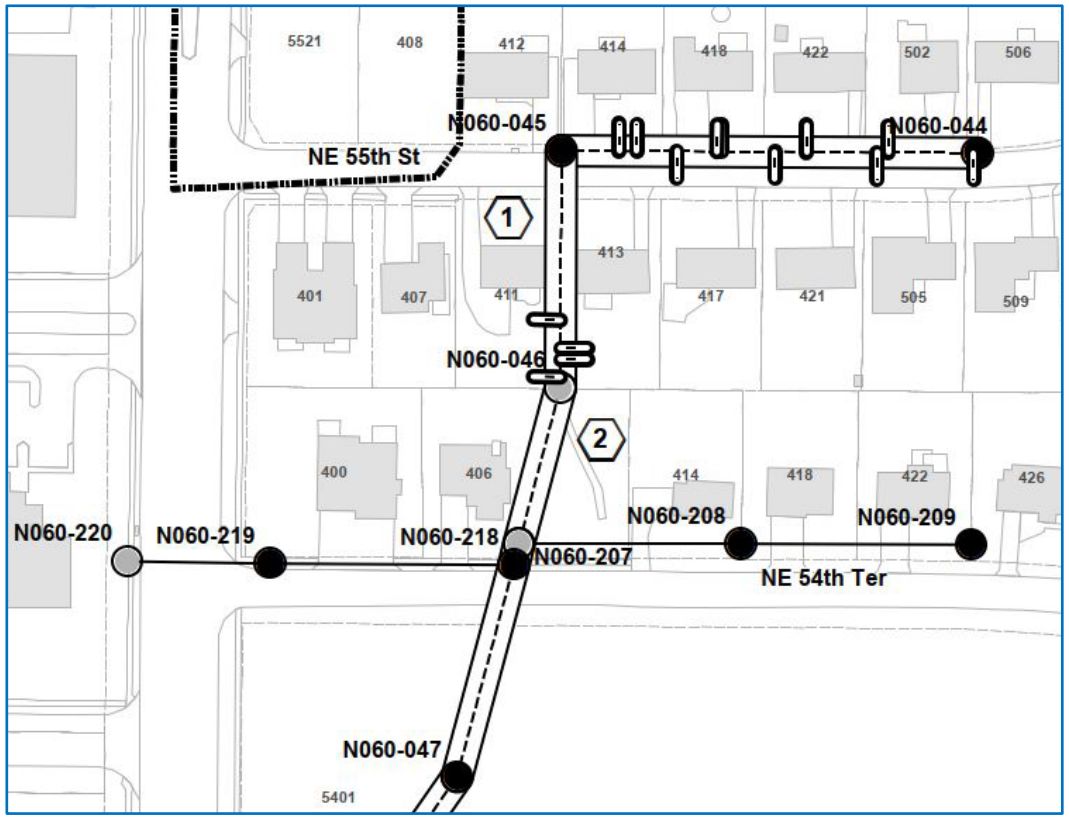

Sheet 30

Proximity to Storm Sewer

N060-045 to N060-046

Storm line runs parallel to Sanitary Sewer with less than 5 feet of horizontal separation

N060-046 to N060-207

Sanitary Sewer crosses concrete channel within 10 feet of Upstream Manhole

TECHNICAL DISCUSSION – AREA 4

Photo from N060-046 looking North

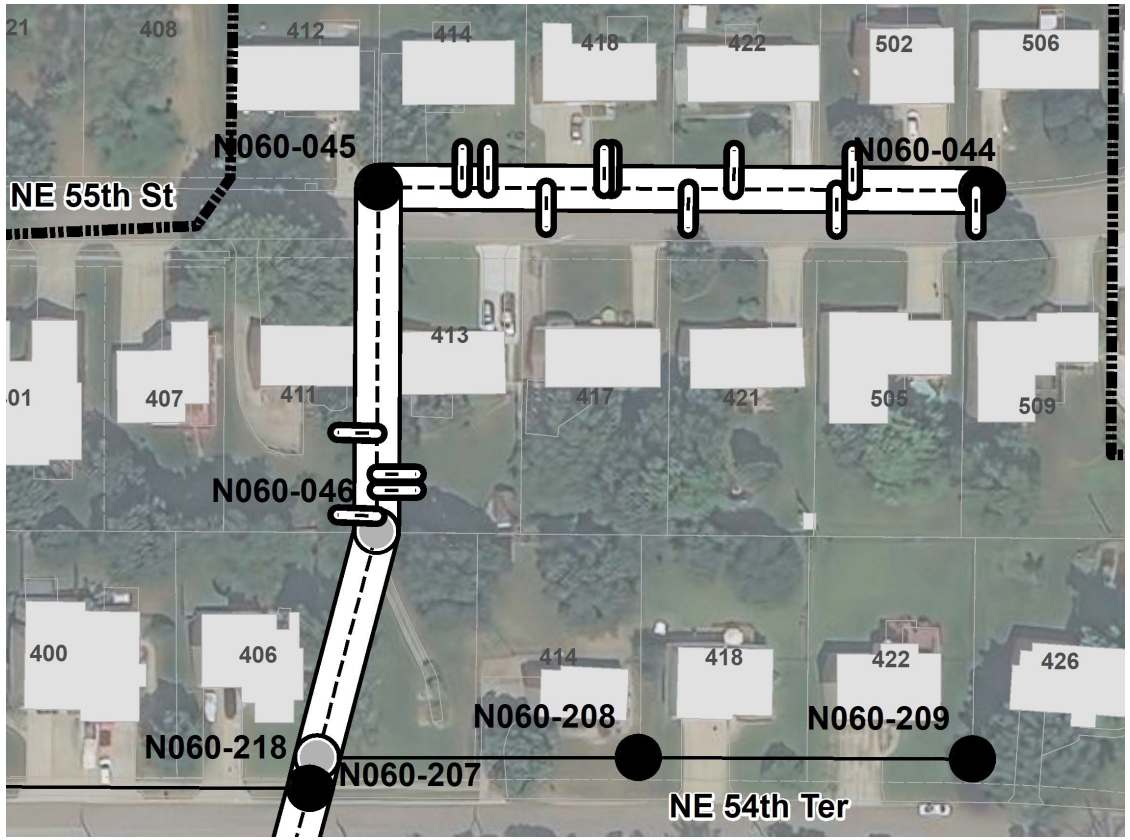

smart sewer

TECHNICAL DISCUSSION – AREA 4

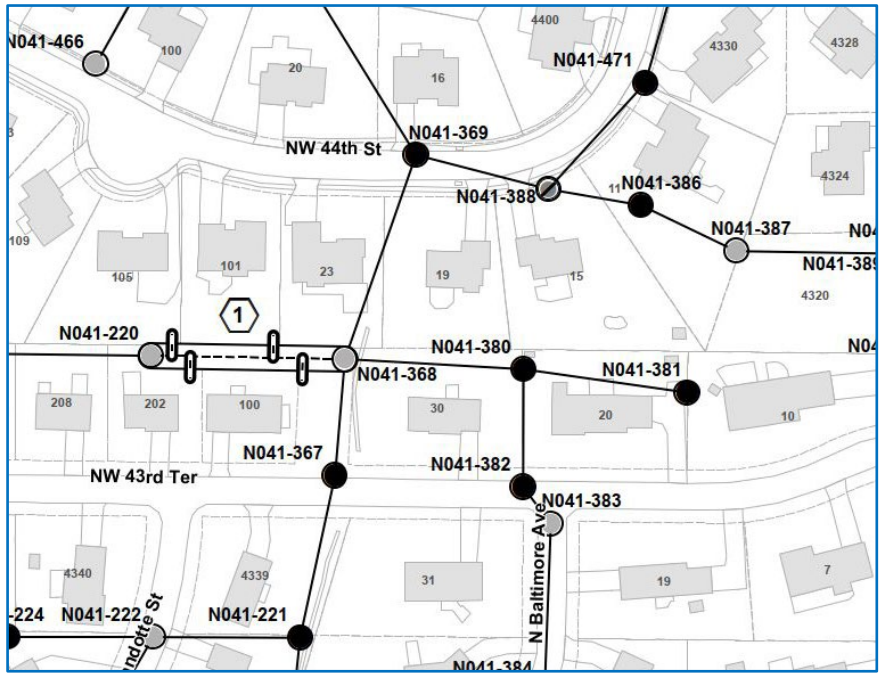

Sheet 48

Protect Property

Shed and fence near Downstream Manhole on TLR. Drainage channel outside property line near Downstream Manhole.

Upstream Manhole has a rock wall adjacent to it.

TECHNICAL DISCUSSION – AREA 4

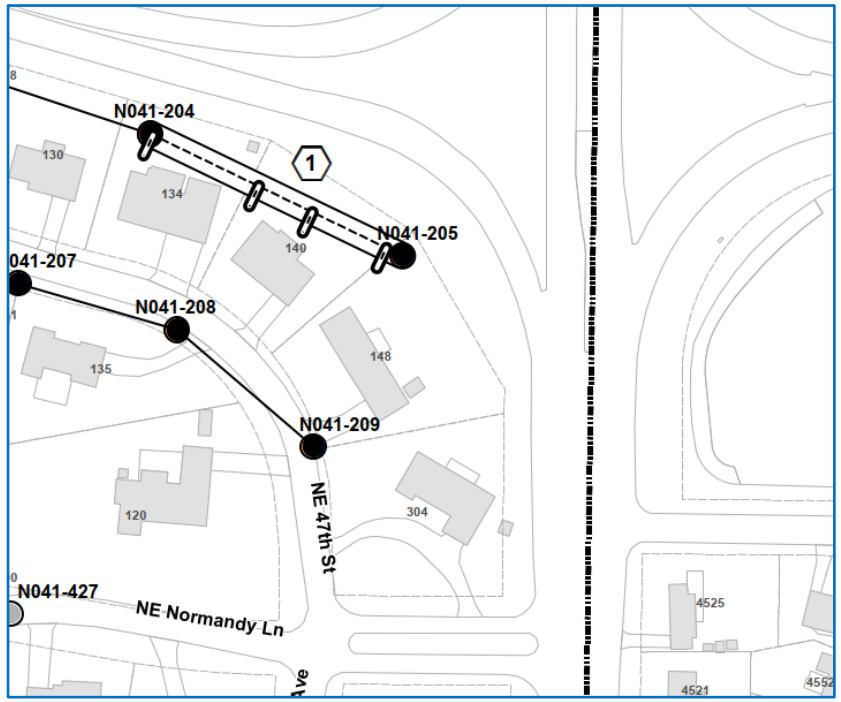

Sheet 45
Protect Property

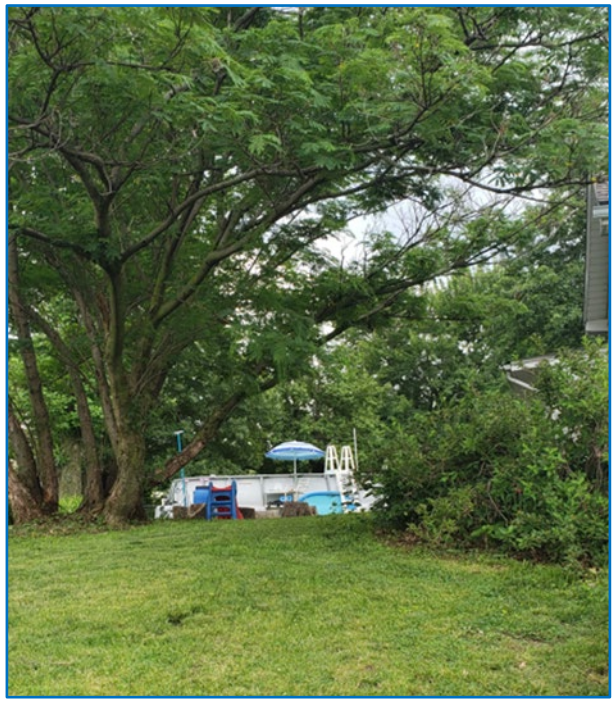

Above ground pool and fire pit over the TLR segment

QUESTIONS

smart sewer

Bidder: _____

ADJUSTMENT UNIT PRICES

Project / Contract Number: 81000691/1545

Project Title: I/I Reduction : Line Creek/Rock Creek Areas 3 & 4

BASE BID

NOTE: IN THE EVENT OF DISCREPANCY, UNIT PRICE SHALL GOVERN. THE LUMP SUM CONTRACT PRICE WILL BE SUBJECT TO ADJUSTMENT ACCORDING TO FINAL MEASURED, USED, OR DELIVERED QUANTITIES BASED ON THE ADJUSTMENT UNIT PRICES LISTED BELOW. THE CITY MAY ADD OR DELETE ANY QUANTITY OF WORK TO THE PROJECT AS SPECIFIED IN SUPPLMENTARY CONDITION SC-11.04 C. THE ADJUSTMENT OF THE CONTRACT PRICE WILL BE BASED UPON THE LUMP SUM BID PLUS OR MINUS THE WORK ADDED OR DELETED BASED UPON THE ADJUSTMENT UNIT PRICES.

Item No.	Unit	Qty.	Item Description:	Unit Price	Extension
SANITARY SEWER OPEN CUT POINT REPAIR					
1	EA	5	Point Repair 5-foot (or less); 8 and 10-inch Pipe (Paved)		
2	EA	9	Point Repair 5-foot (or less); 8 and 10-inch Pipe (Unpaved)		
3	EA	3	Point Repair 5-foot (or less); 12-inch Pipe (Paved)		
4	EA	4	Point Repair 5-foot (or less); 12-inch Pipe (Unpaved)		
5	EA	2	Point Repair 5-foot (or less); 18-inch Pipe (Paved)		
6	EA	11	Point Repair 5-foot (or less); 18-inch Pipe (Unpaved)		
7	EA	4	Point Repair 5-foot (or less); 21-inch Pipe (Unpaved)		
8	EA	2	Point Repair 5-foot (or less); 24-inch Pipe (Paved)		
9	EA	3	Point Repair 5-foot (or less); 24-inch Pipe (Unpaved)		
10	EA	60	Additonal linear foot point repair; 8 and 10-inch Pipe (Paved)		
11	EA	100	Additonal linear foot point repair; 8 and 10-inch Pipe (Unpaved)		
12	EA	30	Additonal linear foot point repair; 12-inch Pipe (Paved)		
13	EA	40	Additonal linear foot point repair; 12-inch Pipe (Unpaved)		
14	EA	20	Additonal linear foot point repair; 18-inch Pipe (Paved)		
15	EA	100	Additonal linear foot point repair; 18-inch Pipe (Unpaved)		
16	EA	20	Additonal linear foot point repair; 21-inch Pipe (Unpaved)		
17	EA	20	Additonal linear foot point repair; 24-inch Pipe (Paved)		
18	EA	30	Additonal linear foot point repair; 24-inch Pipe (Unpaved)		
SANITARY SEWER CURED IN PLACE PIPE (CIPP) LINING (MAIN LINE)					
19	LF	7,165	8-Inch Main Sewer CIPP		
20	LF	600	10-Inch Main Sewer CIPP		
21	LF	2,065	12-Inch Main Sewer CIPP		
22	LF	96	18-Inch Main Sewer CIPP		
23	LF	972	24-Inch Main Sewer CIPP		
24	LF	21,600	Preliminary Cleaning and CCTV Mainline		
TOTAL LINE REPLACEMENT (INCLUDES SERVICE MAIN LINE WYE CONNECTIONS)					
25	LF	510	Open Cut or Pipe Burst; 8 and 10-inch Pipe (Paved)		
26	LF	1,034	Open Cut or Pipe Burst; 8 and 10-inch Pipe (Unpaved)		
27	LF	53	Open Cut or Pipe Burst; 16-inch Pipe (Paved)		

Bidder: _____

BASE BID

NOTE: IN THE EVENT OF DISCREPANCY, UNIT PRICE SHALL GOVERN. THE LUMP SUM CONTRACT PRICE WILL BE SUBJECT TO ADJUSTMENT ACCORDING TO FINAL MEASURED, USED, OR DELIVERED QUANTITIES BASED ON THE ADJUSTMENT UNIT PRICES LISTED BELOW. THE CITY MAY ADD OR DELETE ANY QUANTITY OF WORK TO THE PROJECT AS SPECIFIED IN SUPPLMENTARY CONDITION SC-11.04 C. THE ADJUSTMENT OF THE CONTRACT PRICE WILL BE BASED UPON THE LUMP SUM BID PLUS OR MINUS THE WORK ADDED OR DELETED BASED UPON THE ADJUSTMENT UNIT PRICES.

Item No.	Unit	Qty.	Item Description:	Unit Price	Extension
SERVICE LATERAL REPLACEMENT/REHABILITATION					
28	EA	12	Open Cut Replace Service Lateral Connection (Paved)		
29	EA	26	Open Cut Replace Service Lateral Connection (Unpaved)		
30	LF	80	Additional Linear Feet of Lateral Replacement Beyond 5-feet (Paved)		
31	LF	120	Additional Linear Feet of Lateral Replacement Beyond 5-feet (Unpaved)		
32	EA	103	Lateral Connection Full Wrap CIPP Short Liner		
33	EA	31	Lateral Connection Full Wrap CIPP Long Liner		
34	LF	80	Lateral CIPP Long Liner to Easement (backyard) Beyond 5-feet		
MANHOLE REHABILITATION					
35	EA	2	Remove and Replace Manhole up to 8-feet in Depth (Paved)		
36	EA	3	Remove and Replace Manhole up to 8-feet in Depth (Unpaved)		
37	VF	10	Remove and Replace Manhole Beyond 8-Feet in Depth		
38	EA	163	Replace Frame & Cover - Paved (Adjustable Casting)		
39	EA	123	Replace Frame & Cover - Paved (Standard Casting)		
40	EA	366	Replace Frame & Cover - Unpaved (Standard Casting)		
41	EA	5	Replace Cone		
42	VF	1,060	Cementitious Liner (Vehicle Access < 150')		
43	VF	139	Cementitious Liner (Vehicle Access 150'-250')		
44	VF	115	Cementitious Liner (Vehicle Access 250'-350')		
45	VF	32	Cementitious Liner (Vehicle Access > 350')		
46	EA	32	Rebuild Bench & Trough		
ALLOWANCE					
47	LS	1	Allowance		$300,000.00
			Adjustment Unit Price Extension Subtotal Table A - Base Bid (Add Line Items 1-47)		

THE LUMP SUM ITEMS BELOW SHALL NOT BE ADJUSTED REGARDLESS OF THE FINAL QUANTITY OF THE ADJUSTMENT UNIT PRICE ITEMS LISTED ABOVE. THE CONTRACTOR REMAINS RESPONSIBLE FOR MAINTAINING THE BONDS AND INSURANCE AS NECESSARY TO COVER THE FINAL CONTRACT VALUE AS ADJUSTED USING THE ADJUSTMENT UNIT PRICE ITEMS ABOVE. BID PRICE FOR LUMP SUM ITEMS 31 AND 32 SHALL NOT EXCEED THE LIMITS INDICATED IN THE ITEM DESCRIPTION.

48	LS	1	Mobilization (Shall not exceed 3.5% of Table A Adjustment Unit Price Extension Subtotal)		
49	LS	1	Bonds and Insurance (Shall not exceed 1.5% of Table A Adjustment Unit Price Extension Subtotal)		
50	LS	1	Final Completion, Demobilization, Record Drawings, Close-Out (Shall not be less than $12,000 on the Schedule of Values)		
			Lump Sum Unit Price Subtotal Table A - Base Bid (Add Line Items 48-50)		
			Total Table A - Base Bid (Adjustment Unit Price Extension Subtotal plus Lump Sum Unit Price Subtotal)		

SECTION 01270 – ADJUSTMENT UNIT PRICE AND MEASUREMENT PROCEDURES

PART 1 – GENERAL

1.01 DESCRIPTION

A. This section describes the method by which construction of this project shall be measured and paid in accordance with the Adjustment Unit Prices. Should there be any conflicts between payment described in individual specification sections and this section, payment shall be made in accordance with this section. Any work shown on the Construction Contract Documents described in the specifications but not specifically covered by the bid items shall be included in other items of work.

B. The Base Bid shall be as calculated on Form 00412 Adjustment Unit Prices.

C. The Bid includes all profit, overhead, markups, labor, equipment, materials, incidental or ancillary work, permits, coordination, traffic control, submittals, bonds, insurance, and other costs required to provide a complete functioning project that satisfies the project specifications.

D. Form 00412 includes a listing of Adjustment Unit Prices items and Adjustment Unit Price costs. The final Contract Price shall be adjusted according to the final measured, used, or delivered quantities based on Form 00412 Adjustment Unit Prices. Measurement shall be as approved by the Owner.

E. Include as part of each Line Item Adjustment Unit Price in PART 2 – ADJUSTMENT UNIT PRICES ITEMS include all costs associated with miscellaneous devices, accessory objects, and all necessary appurtenances required to complete installation.

F. As part of each Adjustment Unit Price Line Items 1 through 47, the adjustment unit price includes all costs associated with permits, traffic control, bypass pumping, demolition, excavation, bedding, backfill, ancillary devices, locating manholes, verifying manhole depths, restoration, fence removal and replacement, landscaping, removing and replacing retaining walls 4-feet and less in height, tree removal and replacement, street restoration, curb replacement, sidewalk replacement, driveway restoration, ADA ramp construction, sign removal and replacement, utility pole bracing or relocating, irrigation system replacement, abandoned utility removal, and abandoned railroad rail removal required to complete installation.

    a. When the surface condition directly above the centerline of the pipe is located in the street or curb, the adjustment unit price item shall be paid as Paved. When the surface condition directly above the centerline of the pipe is located in the green space, gravel accessway, driveway, driveway apron or sidewalk the adjustment unit price item shall be paid as Unpaved. If the surface conditions are both Paved and Unpaved over the length of the pipe segment, the Contractor shall be paid proportionate to the actual surface conditions.

G. Contractor shall protect in place all utilities and adjacent infrastructure (including but not limited to subgrade, backfill, streets, driveways, sidewalks, ADA ramps, etc.) by whatever means necessary and at the Contractor's cost. No additional payment will be made for repair of public or private utilities or adjacent infrastructure that are damaged or collapse during construction activities, regardless of the means and methods for protecting in place. If a utility is in direct conflict with the Work and requires relocation, Contractor shall give the utility company reasonable advanced notice and provide such plans as the company may reasonably require to perform the relocation.

H. Contractor shall be responsible to complete field investigations to determine if service laterals within the area of Work are active and to only install new service connections and/or reinstate active laterals. If inactive laterals are installed or reinstated, Contractor shall install a Cured-in-Place Pipe Sectional Point Repair at no additional cost to the Owner.

I. References in this specification to Line Items and Unit Prices (costs) are to Form 00412 Adjustment Unit Prices.

J. The Owner may add or delete any quantity of Work to the project by Work Change Directive at the prices listed on Form 00412 Adjustment Unit Prices, per 00800 Supplementary Conditions SC-11.04 C.

PART 2 – ADJUSTMENT UNIT PRICE ITEMS

2.01 SANITARY SEWER PIPE OPEN CUT POINT REPAIR POINT REPAIR 5-FOOT (OR LESS) 8, 10, 12, 18, 21, AND 24-INCH PIPE (ADJUSTMENT UNIT PRICE LINES ITEMS 1-9)

A. This section refers to open cut replacement of 8-inch to 24-inch pipe. Replacement of sewer pipe by open cut excavation will be measured and paid by Each (EA) point repair completed. The point repair includes up to five (5) linear feet of pipe installed. The cost of the pipe replacement will be paid according to the appropriate diameter of pipe installed according with Form 00412 Adjustment Unit Prices.

B. Additional footage of pipe installed exceeding five (5) linear feet shall be paid in accordance with Form 00412 Adjustment Unit Price Line Items 10-18.

C. Any active service lateral exposed during point repair construction shall be re-established by installing a wye connection and the service lateral shall be replaced to the limits of the right-of-way/permanent easement line via open cut replacement. The cost of these items includes five (5) linear feet of service lateral replacement as measured horizontally.

D. The cost for the additional length of service lateral installed exceeding five (5) linear feet shall be paid by the Adjustable Unit Price Line Items 30-31.

E. Corresponding service lateral connection shall also be re-established prior to backfilling the excavation. The contractor shall contact Water Services Sewer Line Maintenance Division prior to backfilling and the service connection shall be inspected by Water Services Sewer Line Maintenance Division prior to backfilling the excavation.

F. Contractor shall be responsible for protecting driveways throughout the construction. Any driveway damaged by construction activities shall be replaced at the no additional cost to Owner.
G. All costs associated with this item including locating the pipe to be repaired, excavation, the installation of sewer pipe, connections to existing sewer system, pipe fittings, restoring service connections with a wye connection, five (5) linear feet of service lateral, backfill, surface restoration including fencing, landscaping, street restoration, curb replacement, sidewalk replacement, driveway restoration, ADA ramps, and traffic control are to be included in the appropriate Adjustment Unit Price for the appropriate pipe size.
H. Include as part of these Adjustment Unit Price items, miscellaneous devices, accessory objects, and all necessary appurtenances required to complete installation.

2.02 SANITARY SEWER PIPE POINT REPAIR
ADDITIONAL LINEAR FOOT POINT REPAIR 8, 10, 12, 18, 21, AND 24-INCH PIPE
(ADJUSTMENT UNIT PRICE LINE ITEMS 10-18)

A. This section refers to open cut replacement of 8-inch to 24-inch pipe exceeding the first five (5) linear feet of point repair pipe installed. Replacement of sewer pipe by open cut excavation will be measured and paid per linear foot (LF) installed.
B. All costs associated with this item including excavation, the installation of sewer pipe, connections to existing sewer system, pipe fittings, restoring service connections within the limits of the open cut point repair with a wye connection, five (5) linear feet of service lateral, backfill, surface restoration including fencing, landscaping, street restoration, curb replacement, sidewalk replacement, driveway restoration, ADA ramps, and traffic control are to be included in the appropriate Adjustment Unit Price for the appropriate pipe size.
C. Contractor shall be responsible for protecting driveways throughout the construction. Any driveway damaged by construction activities shall be replaced at the no additional cost to Owner.
D. Any active service lateral exposed during point repair construction shall be re-established by installing a wye connection and the service lateral shall be replaced to the limits of the right-of-way/permanent easement line via open cut replacement. The cost of these items includes five (5) linear feet of service lateral replacement as measured horizontally.
E. The cost for the additional length of service lateral installed exceeding five (5) linear feet shall be paid by the Adjustable Unit Price Line Items 30-31.
F. Include as part of these Adjustment Unit Price items, miscellaneous devices, accessory objects, and all necessary appurtenances required to complete installation.

2.03 SANITARY SEWER CURED-IN-PLACE-PIPE (CIPP) LINING
8-INCH TO 24-INCH MAIN SEWER CIPP
(ADJUSTMENT UNIT PRICE LINE ITEMS 19-23)

A. This section refers to the Cured-In-Place Pipe (CIPP) Lining of 8-inch to 24-inch pipe. CIPP sewer pipe will be measured per linear foot (LF) installed. All costs associated with the installation of the CIPP, post-rehabilitation CCTV inspection and reports, CCTV data submittals, material testing and shipping costs, and surface restoration are to be included in the adjustment unit price cost item for the size of CIPP required.
B. The preliminary cleaning and CCTV will be paid according to Adjustment Unit Price Line Item 24.
C. Contractor shall submit supporting documentation, CCTV, and written explanation to Owner if CIPP lining cannot be completed prior to transferring repair to open cut repair list.
D. Contractor shall install a CIPP end seal on each end of every segment listed to be CIPP lined. The cost of the CIPP end seal shall be included in the appropriate size of liner installed. No separate payment shall be made for this item.
E. CIPP lining contractor shall be responsible for reinstating active service connections. CIPP lining contractor shall dye test as necessary to verify active service connections at no additional cost to the Owner. The CIPP lining contractor shall install a CIPP Point Repair in accordance with SECTION 06014 – CURED-IN-PLACE PIPE SECTIONAL POINT REPAIRS FOR SANITARY SEWERS for all re-instated non-active service connections, at no cost to the Owner.
F. Include as part of these Adjustment Unit Price items, miscellaneous devices, accessory objects, and all necessary appurtenances required to complete installation.
G. Contractor shall submit post-rehabilitation CCTV prior to payment. CCTV data needs to be reviewed by Owner/Design Professional prior to payment being made.

2.04 <u>SANITARY SEWER CURED-IN-PLACE-PIPE (CIPP) LINING PRELIMINARY CLEANING AND CCTV MAINLINE (8 TO 24-INCH) (ADJUSTMENT UNIT PRICE LINE ITEM 24)</u>

A. Cleaning shall include light cleaning, as well as any heavy cleaning of 8-inch to 24-inch sewer pipe necessary to perform pipe rehabilitation. Heavy cleaning with root cutters and mechanical chains are included in the cost of this item. Contractor shall submit supporting documentation, CCTV, and written explanation to Owner if the rehabilitation method shown in the plans is recommended to be changed. The cleaning and CCTV will be paid by linear foot (LF) inclusive of all pipe diameters.
B. Cleaning shall include light cleaning, as well as any heavy cleaning of sewer pipe necessary to verify the pre-rehabilitation condition for each main sewer segment and prepare the line for rehabilitation. Rehabilitation is defined as CIPP lining, open cut point repairs and total line replacement. Heavy cleaning with root cutters, tap trimming are included in the costs of this items.
C. No additional payment will be made for mainline sewer segments requiring reverse set-up or for locating manholes to perform complete CCTV. The cost

for an open cut point repair to perform complete CCTV of the mainline sewer segment shall be paid per Line Items 1 through 18 (Section 2.01 and 2.02).

D. Contractor shall submit preliminary CCTV along with mainline and lateral rehabilitation recommendations prior to payment of Line Item 24. CCTV data shall be reviewed and approved by Owner/Engineer prior to payment being made.

2.05 TOTAL LINE REPLACEMENT (INCLUDING SERVICE LATERAL CONNECTIONS)

OPEN CUT OR PIPE BURSTING 8-INCH TO 21-INCH PIPE (PAVED OR UNPAVED)

(ADJUSTMENT UNIT PRICE LINE ITEMS 25-27)

A. This section refers to open cut replacement or pipe bursting of 8-inch to 21-inch diameter sanitary sewer pipe. Replacement of sewer pipe, by either open cut excavation or pipe bursting, will be measured and paid per linear foot (LF) of installed pipe in accordance with the appropriate pipe diameter and surface type.

B. Unit price for Total Line Replacement includes installing service lateral connections and up to five (5) horizontal feet of service lateral for all active laterals. The cost for additional length of service lateral installed beyond five (5) horizontal feet shall be paid per linear foot (LF) in accordance with Line Item 30-31.

C. If a manhole not scheduled to be removed and replaced on a Total Line Replacement pipe is dismantled or damaged during open cut or pipe bursting, the Contractor shall replace the manhole as needed at no additional cost to the Owner.

D. If a surface feature, adjacent storm sewers or other underground utilities prevent open cut excavation on a Total Line Replacement pipe, the pipe shall be replaced via pipe bursting at no additional cost to the Owner. If a sag is present that cannot be corrected via pipe bursting on a Total Line Replacement pipe, the pipe shall be replaced via open cut excavation at no additional cost to the Owner.

E. All costs associated with these Line Items including, but not limited to, the installation of sewer pipe, service lateral connections, five (5) horizontal feet of active service laterals, connection to the existing sewer system, replacing concrete encasements, field investigations to locate and survey existing pipes and utilities, rebuilding of outside drop at manhole, and acceptance testing shall be included in the appropriate Adjustment Unit Price for the appropriate pipe diameter and surface type.

2.06 SERVICE LATERAL REPLACEMENT/REHABILITATION
OPEN CUT REPLACE SERVICE LATERAL CONNECTION (PAVED AND UNPAVED)
(ADJUSTMENT UNIT PRICE LINE ITEM 28 & 29)

A. The Adjustment Unit Price for the Open Cut Service Lateral Replacement is to be based on the installation of the service lateral connection to the main line pipe and a lateral length of five (5) horizontal feet and shall be measured per unit (EA) installed.
B. All costs associated with the Open Cut Service Lateral Replacement including the installation of the pipe and connection, pre-rehabilitation CCTV inspection, post-rehabilitation CCTV inspection, any cleaning of the main or lateral required to install the lateral connection, locating and verifying the lateral to be rehabilitated or replaced to the right-of-way or easement line, excavation, installation of PVC SDR 26, connecting it to existing sewer system, fittings, backfill, surface restoration including fencing, landscaping, street restoration, curb replacement, sidewalk replacement, driveway restoration, ADA ramps, and traffic control are to be included in this Adjustment Unit Price. Approximate lateral repair length to right-of-way is included in the Sewer Main and Lateral Rehabilitation Schedules. Payment will be based on actual service lateral liner installed.
C. Include as part of this Adjustment Unit Price item, miscellaneous devices, accessory objects, and all necessary appurtenances required to complete installation.
D. If a service lateral scheduled for an open cut lateral replacement is located within the limits of an open cut mainline rehabilitation item (e.g. a mainline open cut point repair or additional linear feet of mainline open cut point repair), the open cut lateral replacement, up to five (5) horizontal feet, is subsidiary to and shall be included in the Adjustment Unit Price for the mainline rehabilitation item.

2.07 SERVICE LATERAL REPLACEMENT/REHABILITATION ADDITIONAL LINEAR FEET OPEN CUT LATERAL REPLACEMENT (ADJUSTMENT UNIT PRICE LINE ITEM 30 & 31)

A. The Adjustment Unit Price for the Additional Linear Feet Open Cut Service Lateral Replacement is to be based on the length of open cut service lateral installed beyond the first five (5) horizontal feet of open cut service lateral and shall be measured per linear foot (LF) installed, as measured horizontally.
B. All costs associated with this item including pre-rehabilitation CCTV inspection, post-rehabilitation CCTV inspection, any cleaning of the sewer/lateral required to install the additional length of lateral, installation of the additional length of lateral, all necessary connections and fittings, excavation, backfill, and surface restoration shall be included in this Adjusted Unit Price Line Item.
C. Include as part of this Adjustment Unit Price item, miscellaneous devices, accessory objects, and all necessary appurtenances required to complete installation.

2.08 SERVICE LATERAL REPLACEMENT/REHABILITATION LATERAL CONNECTION FULL WRAP CIPP SHORT LINER (ADJUSTMENT UNIT PRICE LINE ITEM 32)

A. The Adjustment Unit Cost for the Lateral Connection Full Wrap CIPP Short Liner is to be based on a lateral length of 18-inches and shall be measured per unit (EA) installed.
B. All costs associated with the installation of the 360-degree Lateral Connection Full Wrap CIPP Short Liner including pre-rehabilitation CCTV inspection, post-rehabilitation CCTV inspection, any cleaning of the sewer/lateral required to install the lateral connection liner, locating and verifying the lateral and lateral size to be rehabilitated, surface restoration and traffic control are to be included in this adjustment unit price cost.
C. Cleaning shall include light cleaning, as well as any heavy cleaning necessary to install the CIPP liner. Heavy cleaning with root cutters and mechanical chains are included in the cost of each item. Contractor shall submit supporting documentation, CCTV, and written explanation to Owner if lining cannot be completed.
D. Include as part of this Adjustment Unit Price item, miscellaneous devices, accessory objects, and all necessary appurtenances required to complete installation.

2.09 SERVICE LATERAL REPLACEMENT/REHABILITATION LATERAL CONNECTION FULL WRAP CIPP LONG LINER (ADJUSTMENT UNIT PRICE LINE ITEM 33)

A. The Adjustment Unit Cost for the Lateral Connection Full Wrap CIPP Long Liner is to be based on a lateral length of five (5) feet, measured horizontally, and shall be measured per unit (EA) installed.
B. All costs associated with the installation of the 360-degree Full Wrap CIPP Long Liner including pre-rehabilitation CCTV inspection, post-rehabilitation CCTV inspection, any cleaning of the sewer/lateral required to install the lateral connection liner, locating and verifying the lateral and lateral size to be rehabilitated, surface restoration and traffic control are to be included in this adjustment unit price cost
C. Cleaning shall include light cleaning, as well as any heavy cleaning necessary to install the CIPP liner. Heavy cleaning with root cutters and mechanical chains are included in the cost of each item. Contractor shall submit supporting documentation, CCTV, and written explanation to Owner if lining cannot be completed.
D. Include as part of this Adjustment Unit Price item, miscellaneous devices, accessory objects, and all necessary appurtenances required to complete installation.

2.10 SERVICE LATERAL REPLACEMENT/REHABILITATION ADDITIONAL LINEAR FEET FULL WRAP CIPP LONG LINER (ADJUSTMENT UNIT PRICE LINE ITEM 34)

A. The Adjustment Unit Price for the Additional Linear Feet Full Wrap CIPP Long Liner is to be based on the length of Full Wrap CIPP Long Liner installed beyond the first five (5) horizontal linear feet of Long Liner, and shall be measured per linear foot (LF) installed, as measured horizontally.

B. All costs associated with this item including pre-rehabilitation CCTV inspection, post-rehabilitation CCTV inspection, any cleaning of the sewer/lateral required to install the additional length of Long Liner, and installation of the additional length of Long Liner shall be included in this Adjusted Unit Price Line Item.
C. Include as part of this Adjustment Unit Price item, miscellaneous devices, accessory objects, and all necessary appurtenances required to complete installation.

2.11 MANHOLE REHABILITATION
REMOVE AND REPLACE MANHOLE (PAVED AND UNPAVED)
(ADJUSTMENT UNIT PRICE LINE ITEM 35 & 36)

A. This section refers to the construction or replacement of manholes and includes up to a depth of eight (8) vertical feet, as measured from rim to invert elevation. Installation of a new sewer manhole will be measured and paid per unit (EA) installed. All costs associated with excavation, demolition of the existing manhole, measurements and surveys to size the manhole and locate the openings, installation the new sewer manhole, connections to existing sewers, plugging lift holes, bedding, backfill, and surface restoration including fencing, landscaping, street restoration, curb replacement, sidewalk replacement, driveway restoration, ADA ramps, and traffic control are to be included in the Adjustment Unit Price.
B. The cost for the frame and cover will be paid according to the appropriate Adjustment Unit Price Line Items 38-40.
C. Contractor shall replace a minimum of 5 feet of existing sewer entering/exiting the manhole. The cost of this pipe is included in the cost of this Adjustment Unit Price Item. The diameter and approximate depth of all manholes to be replaced are shown on the Construction Contract Documents.
D. The Existing Conditions on the Manhole Rehabilitation Schedule including approximate manhole depth, surface type, wall material, and number and nominal diameter of pipe connections, are from manhole inspection data, CCTV, or sewer records and have not been field verified or surveyed.
E. All manholes shall be constructed in accordance with SECTION 03370 – MANHOLE CONSTRUCTION.
F. Include as part of this Adjustment Unit Price item, miscellaneous devices, accessory objects, and all necessary appurtenances required to complete installation.

2.12 MANHOLE CONSTRUCTION OR REHABILITATION
REMOVE AND REPLACE MANHOLE BEYOND 8-FEET IN DEPTH
(ADJUSTMENT UNIT PRICE LINE ITEM 37)

A. This section refers to additional manhole depth for the construction or replacement of manholes required beyond eight vertical feet and shall be measured and paid per vertical foot (VF) installed for the appropriate surface type.

B. All costs associated with these items, including, but not limited to, demolition of the existing manhole/lamphole/fitting, excavation, measurements and surveys, submittals, installation of the new manhole including exterior drop on outside drop manholes, frame and cover, adjustment rings, CCTV to confirm active connections, connections to existing sewers, plugging of lifting holes, and manhole testing shall be included in these Line Items.

C. Contractor shall replace up to (5) feet of existing active pipe connections entering/exiting the manhole. The cost of said pipe(s) shall be included in these Unit Price Items.

D. The Existing Conditions on the Manhole Rehabilitation Schedule are from manhole inspection data, CCTV, or sewer records and have not been field verified or surveyed by the design engineer. Existing conditions include approximate manhole depth, surface type, wall material, and number and nominal diameter of pipe connections.

E. Where manholes are added with no existing structure, Contractor shall include in these Unit Price Items site investigations to pothole or excavate as necessary to expose fitting/sewer pipes to determine depth, orientation, elevations, etc. for the new manhole.

2.13 MANHOLE REHABILITATION
REPLACE FRAME AND COVER (PAVED AND UNPAVED) (ADJUSTMENT UNIT PRICE LINE ITEMS 38-40)

A. Frame and cover replacements shall be measured per unit (EA) installed. All costs associated with this item including the installation of the frame and cover, external frame seal, adjustment rings and raising the frame and cover to grade, and surface restoration are to be included in the adjustment unit price.

B. All costs associated with frame and cover replacement including surface restoration consisting of fencing, landscaping, street restoration, curb replacement, sidewalk replacement, driveway restoration, ADA ramps, and traffic control are to be included in the Adjustment Unit Price.

C. Include as part of these Adjustment Unit Price items, miscellaneous devices, accessory objects, and all necessary appurtenances required to complete installation.

2.14 MANHOLE REHABILITATION
REPLACE CONE
(ADJUSTMENT UNIT PRICE LINE ITEM 41)

A. Replace cone shall be measured per unit (EA) installed. All costs associated with this item including excavation, removal of the existing cone, installation of the new cone, backfill, and surface restoration are to be included in the adjustment unit price.

B. All costs including surface restoration consisting of fencing, landscaping, street restoration, curb replacement, sidewalk replacement, driveway restoration, ADA ramps, and traffic control are to be included in the Adjustment Unit Price.

C. The cost for the frame and cover will be paid according to Adjustment Unit Price Line Items 38-40.
D. Include as part of this Adjustment Unit Price item, miscellaneous devices, accessory objects, and all necessary appurtenances required to complete installation.

2.15 MANHOLE REHABILITATION
CEMENTITIOUS LINER
(ADJUSTMENT UNIT PRICE LINE ITEM 42-45)

A. Cementitious liner for sewer manhole rehabilitation shall be measured to the nearest tenth of a vertical foot (VF) of manhole lined. All costs associated with the installation and testing of the cementitious liner shall be included in the Adjustment Unit Price Line Items for manholes at appropriate vehicular access distance to the manhole.
B. Manholes receiving cementitious liner are identified in the Work Schedules on the Construction Contract Documents by the manhole distance from the nearest vehicular access, that is, the nearest clear, paved or unpaved roadway. The manhole distance is reported as a range. All manholes receiving cementitious liner fall within one of three different ranges: $X \leq 150$ feet, 150 feet $< X \leq 250$ feet, 250 feet $< X \leq 350$ feet, or $X > 350$ feet, where X = Manhole distance from the nearest vehicular access.
C. Manhole testing costs and preparation of selected manholes to be tested in accordance with SECTION 02702 – SEWER PIPE AND MANHOLE TESTING and SECTION 03362 – MANHOLE REHABILITATION shall be included in the Adjustment Unit Price Line Item.
D. All costs associated with this item including, but not limited to, traffic control and miscellaneous permits for Work performed in non-major streets, locating manholes that are buried 6-inches or less in unpaved areas, preparation of manhole, plugging of flow, or flow through plugging of flow, plugging and patching, removal of steps, mixing and spraying, product testing, vacuum testing, and ancillary restoration shall be included in the Adjustment Unit Price Line Item.
E. Easement clearing, bypass pumping and traffic control in Major Streets, is Not included in this Adjustment Unit Price Line Item. Notify Engineer a minimum of 30 days prior to performing work if either of these items are required to complete this Adjustment Unit Price Line Item. Major Streets, as defined by KCMO Public Works Major Street Plan, can be viewed here: https://www.kcmo.gov/city-hall/departments/public-works/public-works-design-construction-standards
F. The Existing Conditions on the Manhole Rehabilitation Schedule including approximate manhole depth, surface type, wall material, and number of pipe connections, are from manhole inspection data, CCTV, or sewer records and have not been field verified or surveyed. Contractor is responsible to field inspect and confirm depth, presence of drop pipes, and number and size of pipes entering/exiting the manhole, prior to installation.

2.16 MANHOLE REHABILITATION
REBUILD BENCH AND TROUGH
(ADJUSTMENT UNIT PRICE LINE ITEM 46)

A. Rebuilding the bench and trough will be measured per unit (EA) completed. All costs associated with this item are to be included in the Adjustment Unit Price.
B. Include as part of this Adjustment Unit Price item, miscellaneous devices, accessory objects, and all necessary appurtenances required to complete installation.

2.17 ALLOWANCE (BASE BID ADJUSTMENT UNIT PRICE LINE ITEM 47)

A. Any additional work requested by the Owner that is not specifically stated in the construction contract documents shall be paid by this item. Contractor's maximum upper limit for compensation includes a total allowance amount of $300,000.00 not yet authorized by Owner that may be required throughout the course of the work. This allowance amount shall not be utilized unless specifically authorized in writing by the Owner to perform additional work. Additional work shall not be performed, nor is the Contractor approved to utilize any of the allowance amount, unless the Owner provides written authorization to Contractor that includes the scope of work for work to be performed and a maximum billing limit for compensation that has been mutually agreed upon.

PART 3 – LUMP SUM ITEMS

3.01 MOBILIZATION (BASE BID LUMP SUM LINE ITEM 48)

A. Mobilization is a lump sum item and shall not exceed 3.5% of the calculated Base Bid Adjustment Unit Price Extension Subtotal on Form 00412.
B. This item shall be paid with the first Application for Payment.

3.02 BONDS AND INSURANCE (BASE BID LUMP SUM LINE ITEM 49)

A. Bonds and insurance is a lump sum item and shall not exceed 1.5% of the Base Bid Adjustment Unit Price Extension Subtotal on Form 00412.
B. This item shall be paid with the first Application for Payment.

3.03 FINAL COMPLETION, DEMOBILIZATION, RECORD DRAWINGS, CLOSE-OUT (BASE BID LUMP SUM LINE ITEM 50)

A. Shall be a lump sum item. There is no limit on the maximum value of this lump sum item.
B. Regardless of the lump sum price, this item shall be included in the Schedule of Values (SOV) at a minimum price amount shown on Form 00412.

C. This item shall be paid after submittal of Record Drawings and City approval of Contractor's Record Drawing submittal.

End of Section.

CITY OF FOUNTAINS
HEART OF THE NATION

KANSAS CITY
MISSOURI

CERTIFICATION PAGE

Project/Contract Number: 81000691/1545

Project Title: I/I Reduction: Line Creek/Rock Creek Areas 3 & 4

I am responsible for the following specifications and drawings:

Drawings: NA

Specifications: Division 0
Division 0 – not including Section 00412
Division 1 – not including Section 01015 and Section 01270
Division 2
Division 3
Division 5
Division 6

STATE OF MISSOURI
BRIAN
DAVID
HESS
NUMBER
E-20010046
REGISTERED PROFESSIONAL ENGINEER

4/27/22

_____ (SEAL)

I certify under penalty of law that the document and all attachments were prepared under my direction or supervision in accordance with a system designed to assure that qualified personnel properly gathered and evaluated the information submitted, and that the information submitted is, to the best of my knowledge and belief, true, accurate, and complete. I am aware that there are significant penalties for submitting false information, including the possibility of fine and imprisonment for knowing violations.

CITY OF FOUNTAINS
HEART OF THE NATION

KANSAS CITY
MISSOURI

CERTIFICATION PAGE

Project/Contract Number: 81000691/1545

Project Title: I/I Reduction: Line Creek/Rock Creek Areas 3 & 4

I am responsible for the following specifications:

Specifications:
Section 00412
Section 01015
Section 01270

STATE OF MISSOURI
JONATHAN P. HOFLANDER
NUMBER
PE-2011015751
4-14-22
PROFESSIONAL ENGINEER

STATE OF MISSOURI
SEAN SIELER
NUMBER
PE-2020009082
4-14-22
PROFESSIONAL ENGINEER

(SEAL)

I am responsible for the following drawings:

Line Creek/Rock Creek Area 3 Drawings:

Sheet 1:	Cover Sheet
Sheet 2:	General Notes
Sheet 3:	General Layout
Sheet 4-26:	Plan Sheets and Rehabilitation Schedules

STATE OF MISSOURI
JONATHAN P. HOFLANDER
NUMBER
PE-2011015751
4-14-22
PROFESSIONAL ENGINEER

(SEAL)

I am responsible for the following drawings:

Line Creek/Rock Creek Area 4 Drawings:

Sheet 1:	Cover Sheet
Sheet 2:	General Notes & Overall Layout
Sheet 3-49:	Plan Sheets and Rehabilitation Schedules

STATE OF MISSOURI
SEAN SIELER
NUMBER
PE-2020009082
4-14-22
PROFESSIONAL ENGINEER

(SEAL)

I certify under penalty of law that the document and all attachments were prepared under my direction or supervision in accordance with a system designed to assure that qualified personnel properly gathered and evaluated the information submitted, and that the information submitted is, to the best of my knowledge and belief, true, accurate, and complete. I am aware that there are significant penalties for submitting false information, including the possibility of fine and imprisonment for knowing violations.

CITY OF FOUNTAINS
HEART OF THE NATION
KANSAS CITY
MISSOURI

OVERFLOW CONTROL PLAN CONSENT DECREE TABLE OF CONTENTS

Project/Contract Number: 81000691/1545
Project Title: I/I Reduction: Line Creek Rock Creek Areas 3 & 4

INTRODUCTORY INFORMATION

00005	Certification Page
00010	OCP Consent Decree Table of Contents
00015	List of Drawings

BIDDING REQUIREMENTS

00130	Invitation to Bid
00210	OCP Consent Decree Instructions to Bidders
00410	Bid Form
00410.01	Experience and Reference Summary
00410.02	Experience and Reference Summary - Current Projects
00410.03	List of Equipment and Staffing
00412	Unit Prices
00413	Allowance Form
00430	Bid Bond
00440	HRD 5: Construction Contract HRD Instructions
00450	HRD 8: Contractor Utilization Plan/Request for Waiver
00450.01	Letter of Intent to Subcontract
00460	HRD 10: Timetable for MBE/WBE Utilization
00470	HRD 11: Request for Modification or Substitution
	HRD Employee Identification Report Form
	HRD Affidavit of Training Program
00485	HRD Monthly Reporting Instructions
00485.01	MWBE Monthly Utilization Report
00485.01.1	MWBE Monthly Utilization Report Instructions
00485.02	Project Workforce Monthly Report
00485.02.1	Workforce Monthly Report Instructions
00485.03	Company-Wide Workforce Monthly Report
00490	Pre-Contract Bidder's Certification Form

CONTRACTING REQUIREMENTS

00515	Construction Contract Required Submissions
00515.01	Employee Eligibility Verification Affidavit
	Affidavit of Compliance with the Federal Consent Decree Regarding KCMO OCP
00560	Missouri Project Exemption Certificate
00560.01	Kansas City Missouri Tax Exempt Certificate
00610	Performance and Maintenance Bond Form
00615	Payment Bond Form
00620	Sample Insurance Certificate
00630	Revenue Clearance Release Authorization
	Revenue Clearance Letter (Sample)
00700	OCP Consent Decree General Conditions
00800	OCP Consent Decree Supplementary Conditions

	Non-Conformance Notice/Defective Work Form
00830	Prevailing Wage Order - Clay and Platte County, Missouri
00910	Construction Addenda
00930	Request for Interpretation Form
00930.01	Request for Interpretation Form Log
00931	Supplemental Design Instructions
00932	Request for Proposal
00933	Request for Proposal Log
00940	Change Order Form
00945	Work Change Directive

DIVISION 1 - GENERAL REQUIREMENTS

01000	General Project Requirements
01015	Specific Project Requirements
01020	Record Documents
01210	Allowances
01210.01	Allowance Authorization
01270	Adjustment Unit Prices and Measurement Procedures
01290.01	Application for Payment
01290.02	Schedule of Values
01290.03	Certified Payroll Report Instructions
01290.05	Certified Payroll Report Form
01290.07	Payroll Certification
01290.09	Subcontractors and Major Material Suppliers List
01290.11	Daily Labor Force Report
01290.12	Certificate of Achievement of Full Operation
01290.13	Punch List
01290.14	Contractor Affidavit for Final Payment
01290.15	Subcontractor Affidavit for Final Payment
01300	Submittals
01320	Construction Progress Documentation
01320.01	Daily Field Observation Report
01320.02	Periodic Field Observation Report
01320.03	Working Day Report
01322	Photographic and Video Documentation
01330.01	Transmittal Letter
01335	Document Management
01500	Temporary Facilities
01566	Cleanup Operations
01570	Temporary Erosion and Sediment Control
01581	Public Communications
01630	Substitution Request
01700	Traffic Control
01900	Contract Closeout

DIVISION 2 - SITEWORK

02200	Earthwork
02233	Tree/Shrub Removal and Replacement
02503	Sewer Mainline Open-Cut Point Repair
02505	Sanitary Sewer Service Lines and Connections
02575	Surface Restoration

02580 Pipe Bursting Gravity Sewers
02620 Ductile Iron Pipe for Wastewater Use
02624 Polyvinyl Chloride (PVC) Gravity Sewer Pipe
02630 Storm Sewers
02631 Polyvinyl Chloride (PVC) Pressure Pipe for Stormwater and Wastewater
02686 Cleaning and Assessment of Gravity Lines
02702 Testing Requirements for Sanitary Sewer: Mains and Manholes
02831 Chain Link Fences and Gates
02930 Seeding
02931 Sodding

DIVISION 3 - CONCRETE
03000 Miscellaneous Concrete
03362 Sanitary Sewer Manhole Rehabilitation
03370 Sanitary Sewer Manhole Construction

DIVISION 5 - METALS
05010 Sanitary Sewer Manhole Castings

DIVISION 6 - WOOD AND PLASTICS
06010 Cured-In-Place Pipe (CIPP), CIPP Point Repairs and End Seals
06012 Rehabilitation of Sewer Lateral and Main Line to Sewer Lateral Connections

CITY OF FOUNTAINS
HEART OF THE NATION

KANSAS CITY
MISSOURI

LIST OF DRAWINGS

Project Number 81000691

Project Title I/I Reduction: Line Creek/Rock Creek Areas 3 & 4

Line Creek/Rock Creek Areas 3 & 4

Item	Set /Title /Description /Designation	Drawing No(s).	Dated
1	Cover Sheet	D-1063.27 D-1063.28	4/13/2022

Line Creek/Rock Creek Area 3

Item	Set /Title /Description /Designation	Drawing No(s).	Dated
1	Cover Sheet	D-1063.28	5/13/2020
2	General Notes	D-1063.28	5/13/2020
3-4	General Layout	D-1063.28	5/13/2020
5-26	Plan Sheet and Rehabilitation Schedule	D-1063.28	5/13/2020

Line Creek/Rock Creek Area 4

Item	Set /Title /Description /Designation	Drawing No(s).	Dated
1	Cover Sheet	D-1063.27	7/21/2020
2	General Notes and Overall Layout	D-1063.27	7/21/2020
3-49	Plan Sheet and Rehabilitation Schedule	D-1063.27	7/21/2020

CITY OF FOUNTAINS
HEART OF THE NATION

KANSAS CITY
MISSOURI

INVITATION TO BID

Project Number 81000691

Project Title I/I Reduction: Line Creek Rock Creek Areas 3 & 4

The Water Department of Kansas City, Missouri will receive sealed Bids until 2:00 PM, on June 7, 2022 at 4800 East 63rd, Kansas City, MO 64130 for Project No. 81000691 I/I Reduction: Line Creek Rock Creek Area 3 & 4. Bids will be opened after that time via Microsoft TEAMS:

Click here to join the meeting
https://teams.microsoft.com/l/meetup-join/19%3ameeting_ZDNkMDVhNDktZmU1Yy00ZWFmLWI4NjMtNDcxMjU1ZDhjN2Ez%40thread.v2/0?context=%7b%22Tid%22%3a%22bfbb9a2b-6d99-4e78-b3c7-95005d555c8b%22%2c%22Oid%22%3a%22c3519b1e-d72e-46fd-9570-c6202d458f1d%22%7d

Or call in (audio only)
+1 816-298-0271, 848711238# United States, Kansas City
Phone Conference ID: 848 711 238#

City desires that Minority Business Enterprises (MBE) and Women's Business Enterprises (WBE) have a maximum opportunity to participate in the performance of City contracts. The goals for this specific Project are (12%) MBE participation and (12%) WBE participation.

Bidding Documents will be available online to all interested parties at the Kansas City, Missouri Plan Room, http://www.kcmoplanroom.org. All addenda will be posted at this location. Any document or plan may be viewed or downloaded from this location.

Bidders are requested to attend the **Mandatory** Pre-Bid Conference at May 12, 2022 at 11 AM via Microsoft TEAMS:

Click here to join the meeting
https://teams.microsoft.com/l/meetup-join/19%3ameeting_YWMxMGYwNjItNjQ3ZC00Zjc2LTkzYTYtZWM2NzQ5ZTYwZGU5%40thread.v2/0?context=%7b%22Tid%22%3a%22bfbb9a2b-6d99-4e78-b3c7-95005d555c8b%22%2c%22Oid%22%3a%22c3519b1e-d72e-46fd-9570-c6202d458f1d%22%7d

Or call in (audio only)
+1 816-298-0271,,372921061# United States, Kansas City
Phone Conference ID: 372 921 061#

Project Manager: Nicki Chestnut
Phone Number: 816-283-3456
E-mail: nchestnut@tb-engr.com

Contract Administrator: Jamie Driskell
Phone Number: 816-652-2927
E-mail: jdriskell@burnsmcd.com

View all procurement and contracting opportunities at http://www.kcmo.org

CITY OF FOUNTAINS
HEART OF THE NATION

KANSAS CITY
MISSOURI

OVERFLOW CONTROL PLAN CONSENT DECREE INSTRUCTIONS TO BIDDERS

Project/Contract Number: 81000691/1545
Project Title: I/I Reduction: Line Creek Rock Creek Areas 3 & 4

1. Sealed Bids for **I/I Reduction: Line Creek/Rock Creek 3 & 4, Project/Contract No. 81000691/1545** will be received by the Water Services Department at 4800 E. 63rd Street, Kansas City, MO 64130 until 2:00 P.M. on **June 7, 2022**, at which time bidding will be closed.

   a. All Bids will be opened and read aloud. The Bid Envelope must contain all required submissions to be included with the Bid. No Bid may be withdrawn for a period of one hundred twenty (120) days after the Bid is opened. Bid security shall likewise continue for the same one hundred twenty (120) days unless earlier released by the City. The successful Bidder shall comply with all Bidding and contract requirements. Bids, once opened and read, may not be withdrawn without forfeiture of the Bid security.

   b. All Bids shall be addressed to the Director of Water Services, shall state on the outside of the sealed Bid envelope "Bid Enclosed", Project title and Project number, and shall be deposited in the locked Bid box. All Bids must comply with the Bidding Requirements of Kansas City, Missouri (CITY).

2. Consideration of Bids

   a. The City will determine the lowest and best Bid. The City may reject any or all bids. If the City rejects all Bids, the City may: (1) resolicit Bids following the City's normal solicitation procedure; or (2) solicit Bids only from those Bidders that submitted a Bid pursuant to the original solicitation; or (3) use an expedited Bid submission schedule with or without readvertising or issuing any other public notice when the City determines that the delay from the normal City solicitation procedure would not be in the City's best interests.

   b. Alternates. If this solicitation includes Bid Alternates, the City, in its sole discretion, may include any, all or none of the Alternates in determining the lowest and best Bid. In determining lowest and best Bid, the City may include the Alternates in any combination and in any order or priority or choose none of the Alternates. The City may make this determination at any time after Bid Closing and prior to Contract award. The City will act in the best interest of the City in determining whether to include any, all or none of the Alternates and the combination and priority of any Alternates selected. If additional funding becomes available after Contract award, City may add any or all of the Alternates to the Contract by change order.

3. Evidence of Competency to Perform. Each bidder shall furnish with the bid satisfactory evidence of Bidder's competency to perform the proposed work. Such evidence of competency shall consist of the following:

   a. Completed Form 00410.01 Experience Reference Summary for three projects of similar scope performed within the past 5 years including the name, address and telephone number of the contact person having knowledge of the project and the dollar value of the project.

   b. Statement that, during the three (3) years immediately preceding the date of the Bid, Bidder has received no written notices of violations of any federal or state prevailing wage statute in which prevailing wage penalties were assessed against the Bidder or Bidder has been found in such but has made restitution to affected workmen and complied with any statutory penalty; and a statement that Bidder is current on payment of Federal and State income tax withholdings and unemployment insurance payments

c. Statement that Bidder participates in a training program that facilitates entry into the construction industry and which may include an on-the-job or in-house training program. By submitting its Bid, Bidder is agreeing to timely submit during the 48 hours after Bid opening an affidavit of describing such program and Bidder's participation.

d. Identify the following Key Personnel proposed for the Project. (**NOTE:** Key Personnel must be committed to the Project for its duration and may not be removed or substituted without the City's prior written consent.)

   (1) GC Project Manager

   (2) On-Site Field Superintendent

   (3) QC/QA Manager

   (4) Safety Officer

e. For each of the Key Personnel, provide the following background information.

   (1) Years of employment with current employer

   (2) City of residence

   (3) Identify any other projects this person will be involved with concurrently with the Project, and state the time commitment for the Project and each other project

   (4) Discuss professional registrations, education, certifications, and credentials held by this person that are applicable to the Project

f. Discuss generally the tasks involved in the Project.

g. Illustrate clearly and concisely Bidder's understanding of the technical elements that must be addressed for successful completion of the Project.

h. Submit a bid schedule with anticipated milestones for the Project using Microsoft Project 2007 or later format.

i. Describe key issues that might affect the Project schedule and how Bidder proposes to address them.

j. Summary of the Project Safety Plan for the Project.

   (1) Describe how Bidder proposes to address any unique safety issues for the Project

   (2) Describe your safety record and environmental compliance record along with your Firm's OSHA reportable accident rates on recent comparable size projects

   (3) Statement of Bidder's Experience Modification Ratio (EMR)

k. Discuss Bidder's understanding of the traffic control required for the Project, if applicable, and how traffic control will impact the Project schedule. Discuss any major traffic control issues that need to be addressed and Bidder's proposed solutions.

l. Identify any other special issues or problems that are likely to be encountered. Outline the manner in which Bidder suggests resolving them.

m. Outline key community relations issues and how they might be resolved.

n. Describe any difficulties Bidder anticipates encountering in serving the City, in light of the City's status as a municipality and public entity. Explain how Bidder plans to manage them.

o. Summary of Bidder's Quality Assurance/Quality Control Plan for this project

p. Statement regarding all work performed two (2) years immediately preceding the date of the Bid, that contains either (a) a contract by contract listing of any written notices of violations of any federal, state or local DBE/MBE/WBE Program and any damages assessed; or (b) a statement that there have been no such written notices of violations or such penalties assessed; and a statement that Program requirements have been met.

q. Statement that the Bidder has not been rescinded or debarred from any bidding, contractual, procurement, or other such programs by federal, state or local entities.

r. Statement that Bidder is current on payment of Federal and State income tax withholdings and unemployment insurance payments

s. Statement of Bidder's litigation and/or arbitration history over the past five (5) years including final ruling.

t. Statement of Bidder's bond history over the past five (5) years including any incidences of failure to perform.

u. MBE / WBE past project performance and compliance with participation goals in comparable size commercial projects.

v. Fully executed Affidavit of Compliance with the Federal Consent Decree regarding the City of Kansas City, Missouri Overflow Control Plan ("OCP") Civil Action No. 4:10-cv-0487-GAF.

w. Other.

4. Waiver of Bid Requirements. The Director of Water Services or his delegate at any time may waive any requirements imposed by this solicitation or by any City regulation when failure to grant the waiver will result in an increased cost to the City and the requirement waived would be waived for all Bidders for this solicitation and it is in the best interest of the City to grant the waiver. The City Council at any time may waive any requirements imposed in this solicitation by the City's Code of Ordinances when it finds failure to grant the waiver will result in an increased cost to the City and the waived requirement would be waived for all Bidders for this solicitation and it is in the best interest of the City to grant the waiver. The City reserves the right to waive any irregularities and/or formalities as deemed appropriate.

5. Late Bids. Bids and modifications of Bids received after the exact hour and date specified for receipt will not be considered unless: (1) the Bid is sent via the U.S. Postal Service, common carrier or contract carrier, by a delivery method that guarantees the Bid will be delivered to the City prior to the submission deadline; or (2) if the Bid is submitted by mail, common carrier or contract carrier it is determined by the City that the late receipt was due solely to an error by the U.S Postal Service, common carrier or contract carrier; or (3) the Bid is timely delivered to the City but is at a different City location than that specified in this IFB; or (4) the City extends the time after the deadline for a force majeure event that could potentially affect any or all Bidders meeting the deadline.

6. Interpretations and Addenda. All questions about the meaning or intent of the Bidding Documents may be directed to the Project Manager listed at the end of these Instructions to Bidders. Interpretations or clarifications considered necessary by the Project Manager in response to such questions will be issued by Addenda to all parties recorded as having received the Bidding Documents. Questions received less than ten (10) days prior to the date for opening of Bids may not be answered. Only answers issued by formal written Addenda will be binding. Oral and other interpretations or clarifications will be without legal effect. Addenda may also be issued to modify the Bidding Documents as deemed advisable by the City.

7. Bid Security Requirements. All Bids submitted must be accompanied by a Bid deposit in the amount of five percent (5%) of the base Bid which shall be in the form of a Bid Bond (on the form provided in these Bidding Documents), Cashier's Check, Letter of Credit, Certificate of Deposit or other instrument approved in advance by the City. Prior to submittal of the Bid the City Treasurer must approve both the financial institution and text of a Letter of Credit. A Cashier's Check or a Certificate of Deposit shall be payable to the City Treasurer.

8. Forfeiture of Security. If a Bidder fails or refuses to execute the Contract when requested by the City, any Bid security given to the City shall immediately become due and payable and forfeited to the City as liquidated damages.

9. Mistake in Bid Security. By submitting a Bid, Bidder is agreeing to correct any mistakes on a Bid security submission when requested by the City. When such a mistake occurs and a Bidder fails or refuses to correct the mistake or execute the Contract when requested by the City, any Bid security shall be forfeited to the City and the Bidder shall also be subject to debarment and damages.

10. Bids that Exceed the Engineer's Estimate. The City may offer the apparent lowest and best Bidders the option of performing the Work for the Engineer's estimate for the Project with no changes to the Bid requirements or scope of the Project if the Bid is not more than five percent higher than the Engineer's estimate.

11. Escalation. If during the bid review and approval of the contract, the price of material increases, through no fault of the Contractor, the contract price may be equitably adjusted and subject to escalation. Escalation will be based on cost increases without additional profit, overhead or margin, and shall include material costs only that occur between the bid date and within the 90 day period immediately following the Notice to Proceed date. Such price increases shall be documented through third party sources. See Section 00700, Article 11 and Section 00800 Article 11, Paragraph 11.01.F. for additional information.

12. Post Bid Required Submissions. The successful Bidder will be required to submit the following documents with the signed copies of the Bid Form/Contract or within the timeframes specified in the Notice of Intent to Contract letter. Copies of the City's forms that the successful Bidder will be required to sign are bound into this Project Manual for information:

a. Properly signed, dated, and sealed Performance and Maintenance Bond and Payment Bond;

b. Properly completed certificates of insurance;

c. Copies of licenses required by the City to do the Work;

d. A copy of CONTRACTOR's current Certificate of Good Standing or Fictitious Name Registration from the Missouri Secretary of State, or other acceptable proof; and

e. A fully executed Affidavit of Compliance with the Federal Consent Decree regarding the City of Kansas City, Missouri Overflow Control Plan ("OCP") Civil Action No. 4:10-cv-0487-GAF.

13. Indemnification – State of Missouri. The contract documents contains a requirement that Contractor shall indemnify, defend and hold harmless the Missouri Highways and Transportation Commission (MHTC) and the Missouri Department of Transportation (MoDOT) and their respective employees from and against all claims, damages, liability, losses, costs, and expenses, including reasonable attorneys' fees, arising out of or resulting from any acts or omissions in connection with the contract, caused in whole or in part by Contractor, its employees, agents, or Subcontractors, or caused by others for whom Contractor is liable. The contract requires Contractor to obtain specified limits of insurance to insure the indemnity obligation. Contractor has the opportunity to recover the cost of the required insurance in the Contract Price by including the cost of that insurance in the Bid amount.

14. City's Buy American and Missouri Preference Policies. It is the policy of the City that any manufactured goods or commodities used or supplied in the performance of any City contract or any subcontract thereto shall be manufactured or produced in the United States whenever possible. When Bids offer quality, price, conformity with specifications, term of delivery and other conditions imposed in the specifications that are equal, the City shall select the Bid that uses manufactured goods or commodities that are manufactured or produced in the United States. The City shall give preference to all commodities manufactured, produced, or grown within the State of Missouri and to all firms, corporations, or individuals doing business as Missouri firms, corporations or individuals, when quality is equal or better and delivered price is the same or less. It is the bidder's responsibility to claim these preferences.

15. Affirmative Action. It is the policy of the City that any person or entity entering into a contract with the City, will employ applicants and treat employees equally without regard to their race, color, sex, religion, national origin or ancestry, disability, sexual orientation, gender identity or age. Bidder will be required to comply with the City's Affirmative Action ordinance if Bidder is awarded a contract from the City totaling more than $300,000.00. If you have any questions regarding the City's Affirmative Action requirements, please contact HRD at (816) 513-1836 or visit the City's website at www.kcmo.gov.

16. Tax Clearance. Bidder will be required to furnish to CITY sufficient proof from City's Commissioner of Revenue, verifying that Bidder is in compliance with the license and tax ordinances administered by City's Revenue Division as a precondition to CITY making its first payment under any CONTRACT over $160,000.00. Bidder will also be required to obtain proof of City tax compliance from all of its Subcontractors prior to the Subcontractors performing any Work.

17. Substitutions or "Or-Equal" Items The procedure for submission of substitutions or "or-equal" items is set forth in the General Conditions and Supplementary Conditions.

18. Prevailing Wage Requirements. The successful Bidder shall pay the prevailing hourly rate of wages as determined by the Missouri Annual Wage Order and/or Federal Wage Determination set forth in the Project Manual. In case of a conflict between Missouri and Federal wage rates, the higher rate shall apply.

Successful Bidder shall be required to use City's Internet web based Prevailing Wage Reporting System provided by City and protocols included in that software during the term of this Contract. When requested by the City, Bidder shall submit user applications to City's provided Prevailing Wage Reporting System for all applicable personnel and shall require subcontractors to submit same.

19. Contract Information Management System. Successful Bidder shall be required to use City's Internet web based Contract Information Management System/Project Management Communications Tool provided by City and protocols included in that software during the term of this Contract. Bidder/Proposer shall submit user applications to City's provided Contract Information Management System for all personnel, subcontractors or suppliers as applicable.

20. MBE/WBE Program Requirements. City desires that Minority Business Enterprises (MBE) and Women's Business Enterprises (WBE) have a maximum opportunity to participate in the performance of City contracts. The goals for this specific Project are 12% MBE participation and 12% WBE participation. The City's HRD Forms and HRD Instructions for Construction Projects are incorporated into these Bidding Documents and the Contract Documents. The MBE/WBE Directory is available on the City's website at www.kcmo.gov. Please call the Human Relations Department at (816) 513-1836 for assistance.

Successful Bidder shall be required to use City's Internet web based MBE/WBE Program Reporting System provided by City and protocols included in that software during the term of this Contract. When requested by the City, Bidder shall submit user applications to City's provided MBE/WBE Program Reporting System for all applicable personnel and shall require subcontractors/subconsultants to submit same.

21. Waiver of MBE/WBE Requirements. The City Council may waive any and all MBE/WBE requirements imposed by any Bidding Document or the MBE/WBE Ordinance and Contract with the lowest and best Bidder if the City Council determines a waiver is in the best interests of the City.

22. Forfeiture of Bid Bond for Failure to Make MBE/WBE Submissions. By submitting its Bid, Bidder is agreeing to the following: (1) Bidder has made by Bid opening a good faith effort to meet the MBE/WBE goals established for the Project; or Bidder will continue to make during the 48 hours after Bid opening a good faith effort to meet the MBE/WBE goals established for the Project; and (2) Bidder will timely submit its 00450 HRD Construction Contractor Utilization Plan/Request for Waiver (HRD Form 8), 00450.01 Letter of Intent to Subcontract for each MBE/WBE listed on the 00450 HRD Construction Contractor Utilization Plan/Request for Waiver, and 00460 HRD Timetable for MBE WBE Utilization (HRD Form 10); and (3) Bidder will submit documentation of its good faith efforts to meet the MBE/WBE goals when requested by the City. Failure to meet these requirements in good faith will result in Bidder being debarred and forfeiting its Bid Bond.

23. Workforce Program Requirements. City desires that minorities and women have a maximum opportunity to practice their trades on city construction projects. The minimum company-wide goals are a ten percent (10%) minority workforce and two percent (2%) women workforce. The City's HRD Forms and HRD Instructions for Construction Projects are incorporated into these Bidding Documents and the Contract Documents.

Successful Bidder shall be required to use City's Internet web based Workforce Program Reporting System provided by City and protocols included in that software during the term of this Contract. When requested by the City, Bidder shall submit user applications to City's provided Workforce Program Reporting System for all applicable personnel and shall require subcontractors to submit same.

24. Subcontractors, Suppliers and Others.

a. If the Contract Documents require the identity of certain Subcontractors, Suppliers and other persons and organizations (including those who are to furnish the principal items of material and equipment) to be submitted to City, the apparent lowest and best Bidder, and any other Bidder so

requested, shall submit to City a list of all such Subcontractors, Suppliers and other persons and organizations proposed for those portions of the Work for which such identification is required. An experience statement shall accompany such list with pertinent information regarding similar projects and other evidence of qualification for each such Subcontractor, Supplier or organization if requested by City. If City has reasonable objection to any proposed Subcontractor, Supplier or other person or organization, City may request the apparent lowest and best Bidder to submit an acceptable substitute without an increase in Bid price.

b. By submitting its Bid, Bidder agrees that it has read and understands all the provisions of General Condition No. 6.07, Concerning Subcontractors, Suppliers and Others, and that it will comply with all those provisions including but not limited to mandatory mediation of disputes and the prohibition against paid-if-paid and paid-when-paid contract clauses. It is the City's expectation that all Subcontractors and Suppliers will be treated fairly and in good faith by the successful Bidders and that the successful Bidder will make all reasonable efforts to resolve contract disputes with a Subcontractor or Supplier in a prompt and fair manner. If the City is notified by a Subcontractor or Supplier of a contract claim with the successful Bidder, City will notify the successful Bidder and will request prompt resolution of the claim. City will provide any such Subcontractor or Supplier information regarding mandatory mediation as well as a copy of the Payment Bond. City may notify the Surety that City has taken cognizance of such claim.

c. In accordance with the Missouri Prompt Payment Act, City reserves the right to withhold payment(s) in good faith from the successful Bidder due to: i)the successful Bidder's failure to comply with any material provision of the contract; ii)third party claims filed or reasonable evidence that a claim will be filed; iii)the successful Bidder's failure to make timely payments for labor, equipment or materials; or iv)for damage to a Subcontractor or Supplier.

d. By submitting its Bid, Bidder agrees it will not deny any Subcontractor subcontracting opportunities solely because the Subcontractor is not a signatory to collective bargaining agreements with organized labor.

e. The provisions of GC 6.07 are a material term of the Contract with the City and failure by the successful Bidder to comply with the provisions of this section will be taken into consideration by City in making the determination of lowest and best bidder in any subsequent City contracts.

25. Pre-Bid Conference. On Thursday, May 12, 2022, at 11:00 AM, the Water Services Department will hold a mandatory pre-Bid conference virtually via Microsoft Teams. Attendance at the pre-Bid conference is mandatory for all Bidders on this Project. For this Project, the City *shall not contract with a Bidder who has not attended the entire pre-Bid conference* for this Project.

26. On-Site Inspection. The Project Site will be available for inspection by Bidders. Bidders visiting the Project Site shall be responsible for their own safety.

27. Signatures. Each copy of the Bid Form/Contract must be signed and properly dated by the following, as applicable:

Limited Liability Company:

□ a member of the limited liability Company authorized to sign on behalf of the company.

Partnership:

□ a partner authorized to sign on behalf of the partnership.

Sole Proprietor:

□ the proprietor.

Joint Venture:

□ the parties to the Joint Venture authorized to sign on behalf of each party to the Joint Venture, or a person authorized by each party to the Joint Venture to sign on behalf of all parties to the Joint Venture.

Corporation:

□ a corporate office authorized to sign on behalf of the corporation. Corporation's seal must be attached to the signature.

28. Forward all questions in writing to the following Project Manager and Contract Administrator. Questions received less than ten (10) days prior to the Bid Date may not be answered. Interpretations or clarifications considered necessary by the Project Manager in response to such questions will be issued by Addenda to all Bidders. Oral or other interpretations or clarifications shall be without legal effect, even if made at a Pre-Bid Meeting.

Nicki Chestnut, Project Manager
Taliaferro & Browne, c/o Water Services Department
1020 E 8th Street
Kansas City, MO 64106
Phone: (816) 283-3456
E-mail: nchestnut@tb-engr.com

Jamie Driskell, Contract Administrator
Burns & McDonnell
9450 Ward Parkway
Kansas City, MO 64114
Phone: (816) 652-2927
E-mail: jdriskell@burnsmcd.com

For persons with disabilities needing reasonable accommodations please contact Jean Lawson at 816-513-6566. If you need to use the Relay Service, please dial 711.

Bidder: _____

CITY OF FOUNTAINS
HEART OF THE NATION
KANSAS CITY
MISSOURI

BID FORM/CONTRACT

Project/Contract Number: 81000691/1545

Project Title: I/I Reduction: Line Creek/Rock Creek Areas 3 & 4

1. Bidder, having examined the Bidding Documents, related documents and the Site of the Work, and being familiar with all the conditions affecting the construction of the proposed Work, including Laws and Regulations and the availability of materials and supplies, agrees, if this Bid is selected by CITY, this Bid Form/Contract will become the Contract between Bidder and CITY for Bidder to furnish all labor and materials, equipment and services necessary for the proper completion of the Work in accordance with the Contract Documents, including general construction work at the price(s) stated below, which stated sums include fees and all other charges applicable to materials, appliances, labor and all things subject to and upon which other charges may be levied.
2. Bidder agrees the Contract Documents will comprise the entire agreement between CITY and Bidder. The Contract Documents are identified in the General Conditions and are incorporated into and made part hereof this Bid Form/Contract by reference.
3. Bidder agrees that if this Bid Form/Contract is executed by CITY, Bidder's offer is accepted and this Bid Form/Contract that incorporates all other Contract Documents shall constitute the Contract between the parties. Bidder authorizes the CITY to fill in the Contract Price on this Bid Form/Contract in accordance with Bidder's Bid. Bidder agrees that this Bid Form/Contract may be executed in one or more counterparts, each of which will be deemed an original copy of this Bid Form/Contract and all of which, when taken together, will be deemed to constitute one and the same Bid Form/Contract. This Bid Form/Contract shall be effective upon the execution of counterparts by both parties, notwithstanding that both parties may not sign the same counterpart. The parties' signatures transmitted by facsimile or by other electronic means shall be proof of the execution of this Bid Form/Contract and shall be acceptable in a court of law. A copy of this Bid Form/Contract shall constitute an original and shall be acceptable in a court of law.
4. **The Bid Price(s) shall be shown in numeric figures only.**

   TOTAL SUM TABLE A - BASE BID IN NUMERIC FIGURES

   $_____
5. The undersigned Bidder has given CITY'S Project Manager written notice of all conflicts, errors or discrepancies that it has discovered in the Contract Documents and the written resolution thereof by the Project Manager or by the DESIGN PROFESSIONAL is acceptable to Bidder.
6. The undersigned Bidder agrees that this Bid shall remain subject to selection by CITY, and may not be withdrawn for one hundred twenty (120) days after the day Bids are opened.
7. The undersigned Bidder certifies that this Bid contains no modifications, deviations, riders or qualifications.
8. Form(s) 00412 Adjustment Unit Prices and 00413 Allowances contain prices included in the Base Bid, and are incorporated into this Bid. Form(s) must be completed and returned with this Bid.
9. The undersigned Bidder acknowledges receipt of the following addenda listed by number and date appearing on each addendum:

Bidder: _____

Addendum Number	Dated	Addendum Number	Dated
(_____)	(_____)	(_____)	(_____)
(_____)	(_____)	(_____)	(_____)
(_____)	(_____)	(_____)	(_____)
(_____)	(_____)	(_____)	(_____)
(_____)	(_____)	(_____)	(_____)
(_____)	(_____)	(_____)	(_____)
(_____)	(_____)	(_____)	(_____)

10. By submitting its bid, Bidder is agreeing to meet or exceed the minimum employment goals of 12% minority and 12% women during the term of its contract with the City, or request a waiver of the goals. If a waiver is requested, Bidder must establish good faith efforts towards meeting the goals as set forth in the HRD Instructions for Construction Contracts and the City's Construction Employment Program Ordinance (commonly known as the "Workforce Ordinance") (City Code Section 3-515). Within forty-eight (48) hours after bid opening, the construction contractor shall submit HRD Employee Identification Report Form-Rev. 102715 which shall include: the name, home address, job title, sex and race/ethnicity of each person the contractor anticipates will be performing construction labor hours creditable towards the minimum workforce goals applicable to the construction contractor individually.

11. Should Bidder fail to meet or exceed the minimum employment goals or otherwise establish that Bidder is entitled to a waiver under circumstances in which Bidder has previously failed to meet or exceed the goals on one or more occasions with the twenty-four month period immediately preceding the completion of the Work under this Bid Form/Contract, Bidder may be suspended from participating, either as a contractor or subcontractor, on any future contract with the City for a period ranging from thirty days to six months as further specified in the Contract Documents. This program is distinguished from the M/WBE Program in that it is not based on company ownership but rather is based on workforce hours instead of a budgetary allocation of work.

    By submitting its bid, Bidder warrants that if its bid should exceed $300,000.00 and Bidder employs fifty (50) or more people, Bidder has an affirmative action program in place and will maintain the affirmative action program in place for the duration of its contract with the City. Bidder further warrants that it will comply with the affirmative action requirements contained in the General Conditions as incorporated by reference into this Bid Form/Contract.

12. Section 13 through Section 16 constitutes the Affidavit of Intended Utilization required to be submitted by Bidders.

13. By submitting its bid, Bidder is agreeing to the following: (1) Bidder has made by bid opening a good faith effort to meet the MBE/WBE/DBE goals established for the project; or Bidder will continue to make during the 48 hours after bid opening a good faith effort to meet the MBE/WBE/DBE goals established for the project; and (2) Bidder will timely submit its **00450 HRD 08 Contractor Utilization Plan/Request for Waiver** and **00450.01 Letter of Intent to Subcontract** for each MBE/WBE listed on the 00450 HRD 08 Construction Contractor Utilization Plan/Request for Waiver, and **00460 HRD Timetable for MBE WBE Utilization (HRD Form 10)**; and (3) Bidder will submit documentation of its good faith efforts to meet the MBE/WBE/DBE goals when requested by the City. Failure to meet these requirements in good faith will result in Bidder forfeiting its bid bond.

Bidder: _____

PROJECT GOALS: ___12___% MBE __12__ % WBE ___0____ % DBE

BIDDER PARTICIPATION: _____% MBE _____% WBE _____ % DBE

14. To the best of Bidder's knowledge, the following are names of certified MBEs and/or WBEs with whom Bidder, or Bidder's subcontractors, presently intend to contract with if awarded the Contract on the above project: ***(*All firms must <u>currently</u> be certified by Kansas City, Missouri Human Relations Department*)***

A. Name of M/WBE Firm _____
Address _____
Telephone No. _____
I.R.S. No. _____
Area/Scope of work _____
Subcontract amount _____

B. Name of M/WBE Firm _____
Address _____
Telephone No. _____
I.R.S. No. _____
Area/Scope of work _____
Subcontract amount _____

C. Name of M/WBE Firm _____
Address _____
Telephone No. _____
I.R.S. No. _____
Area/Scope of work _____
Subcontract amount _____

D. Name of M/WBE Firm _____
Address _____
Telephone No. _____
I.R.S. No. _____
Area/Scope of work _____
Subcontract amount _____

E. Name of M/WBE Firm _____
Address _____
Telephone No. _____
I.R.S. No. _____
Area/Scope of work _____
Subcontract amount _____

F. Name of M/WBE Firm _____
Address _____
Telephone No. _____
I.R.S. No. _____
Area/Scope of work _____
Subcontract amount _____

(List additional MBE/WBEs, if any, on additional pages and attach to this form)

15. By submitting its bid, Bidder is agreeing it will identify and timely submit within 48 Hours after Bid opening those MBE/WBE subcontractors with dollar amounts and scopes of work, which apply to or exceed the MBE/WBE goals for the Project on the **00450 HRD 08 Contractor Utilization Plan/Request for Waiver.**
16. Bidder agrees that failure to meet or exceed the MBE/WBE Goals for the above project will require the Director of Human Relations to recommend disapproval of the bid unless the Director of Human Relations finds the Bidder established good faith efforts towards meeting the goals as set forth in the HRD Forms and Instructions for Construction Projects and the City's MBE/WBE Ordinance.
17. The manufacturers and subcontractors listed below will be the manufacturers and subcontractors utilized by the Bidder in performance of the project. Changes from the listed manufacturers and subcontractors require prior approval from the City. Failure to list equipment, materials, or subcontractors that meet the specifications shall not relieve the Bidder from providing equipment, materials and subcontractors that meet the specifications. **Failure to complete the lists below may be cause for the City to deem the bid non-responsive.**

	Materials	**Specification Section**	**Manufacturer to be Provided**
a.	**Manhole Rehabilitation Cementitious Liner**	**03362**	_____
b.	**Cured-In-Place Pipe (CIPP) Liner Mainline**	**06010**	_____
c.	**Trenchless Rehab of Sewer Lateral And Main Line To Sewer Lateral Connection (Lateral CIPP)**	**06012**	_____
d.	**Pipe End Seal Liner**	**06010**	_____
e.	**Sectional Point Repairs By Cured-In-Place Method**	**06010**	_____

For subcontractor's, indicate either the subcontractor to be provided, indicate "self-performed," or indicate "not-applicable" if there is not work (for example – Pipe Bursting is optional).

	Work to be Performed	**Specification Section**	**Subcontractor to be Provided**
a.	**Pipe Bursting**	**02580**	_____
b.	**Manhole Rehabilitation Cementitious Liner**	**03362**	_____
c.	**Cured-In-Place Pipe (CIPP) Liner Mainline**	**06010**	_____
d.	**Trenchless Rehab of Sewer Lateral And Main Line To Sewer Lateral Connection (Lateral CIPP)**	**06012**	_____
e.	**Pipe End Seal Liner**	**06010**	_____
f.	**Sectional Point Repairs By Cured-In-Place Method**	**06010**	_____

g. Open Cut Mainline Sewer Replacement _____

h. Open Cut Mainline Sewer Point Repair _____

i. Open Cut Lateral Connection and Lateral Replacement _____

Business Entity Type:

(__) Missouri Corporation
(__) Foreign Corporation
(__) Fictitious Name Registration
(__) Sole Proprietor
(__) Limited Liability Company
(__) Partnership
(__) Joint Venture
(__) Other: (Specify)_____

BIDDER
Legal name & address of Bidder, person firm, partnership, corporation, or association submitting Bid:

_____
Phone No: _____
Cell No: _____
Facsimile No: _____
Bidder's E-Mail: _____
_____
Federal ID. No. _____

I hereby certify that I have authority to execute this document on behalf of Bidder, person, firm, partnership, corporation or association submitting Bid.

By: _____
(Signature)

_____
(Print Name)

Title:_____

Date:_____

(Attach corporate seal if applicable)

NOTARY

Subscribed and sworn to before me this _____ day of _____, 20__.

My Commission Expires: _____ _____

Bidder: _____

ACCEPTANCE OF BID

CITY, by executing this Bid Form/Contract, hereby accepts Bidder's Bid and this Bid Form/Contract that incorporates all other Contract Documents shall constitute the Contract between the Parties.

CITY shall pay CONTRACTOR for completion of the Work in accordance with the Contract Documents a maximum amount of _____ Dollars, ($ _____). The Contract Price includes:

00412 Unit Prices, included in the Bid, a copy of which is attached

00413 Allowances, included in the Bid, a copy of which is attached

By executing this Bid Form/Contract, CITY accepts Bidder's offer for the Contract Price stated above and this Bid Form/Contract that incorporates all other Contract Documents shall constitute the Contract between the parties

_____

City of Kansas City, Missouri (OWNER or City)

Approved as to form:

_____

Assistant City Attorney

I hereby certify that there is a balance, otherwise unencumbered, to the credit of the appropriation to which the foregoing expenditure is to be charged, and a cash balance, otherwise unencumbered, in the treasury, to the credit of the fund from which payment is to be made, each sufficient to meet the obligation hereby incurred.

_____

Director of Finance (Date)

EXPERIENCE AND REFERENCE SUMMARY

Project/Contract Number: 81000691/1545

Project Title: I/I Reduction: Line Creek/Rock Creek Areas 3 & 4

Firm's Legal Name	
Mailing Address	
Contact – Name & Email	
Contact – Phone & Fax	

NO.	PROJECT & LOCATION	OWNER NAME & ADDRESS CONTACT & PHONE NUMBER	PROJECT DURATION & DATE COMPLETED	$ VALUE
1.				
2.				
3.				
4				
5				
6				
7				
9				
10				

CITY OF FOUNTAINS
HEART OF THE NATION
KANSAS CITY
MISSOURI

EXPERIENCE AND REFERENCE SUMMARY – CURRENT PROJECTS

Project/Contract Number: 81000691/1545

Project Title: I/I Reduction: Line Creek/Rock Creek Areas 3 & 4

Firm's Legal Name	
Mailing Address	
Contact – Name & E-Mail	
Contact – Phone & Fax	

NO.	PROJECT & LOCATION	CONTRACT AMOUNT/ % COMPLETE	OWNER NAME & ADDRESS CONTACT & PHONE NUMBER	LENGTH, DIAMETER & MATERIAL OF CONSTRUCTION OR DESCRIPTION OF REPAIRS	START DATE
1.					
2.					
3.					
4.					
5.					
6.					
7.					
8.					

LIST OF EQUIPMENT AND STAFFING AVAILABLE FOR PROJECT

Project/Contract Number: 81000691/1545

Project Title: I/I Reduction: Line Creek/Rock Creek Areas 3 & 4

Page _____ of _____

	EQUIPMENT AVAILABLE FOR CONSTRUCTION (OR ATTACH LIST)		STAFFING BREAKDOWN	NUMBER OF EACH CATEGORY
1.		1.	OFFICE STAFF	
2.		2.	SUPERVISORS	
3.		3.	FIELD STAFF – CREW FOREMEN	
4.		4.	FIELD STAFF – OPERATORS (NOT FOREMEN)	
5.		5.	FIELD STAFF – LABORERS (NOT FOREMEN)	
6.		6.		

Bidder: _____

ADJUSTMENT UNIT PRICES

Project / Contract Number: 81000691/1545

Project Title: I/I Reduction : Line Creek/Rock Creek Areas 3 & 4

BASE BID

NOTE: IN THE EVENT OF DISCREPANCY, UNIT PRICE SHALL GOVERN. THE LUMP SUM CONTRACT PRICE WILL BE SUBJECT TO ADJUSTMENT ACCORDING TO FINAL MEASURED, USED, OR DELIVERED QUANTITIES BASED ON THE ADJUSTMENT UNIT PRICES LISTED BELOW. THE CITY MAY ADD OR DELETE ANY QUANTITY OF WORK TO THE PROJECT AS SPECIFIED IN SUPPLMENTARY CONDITION SC-11.04 C. THE ADJUSTMENT OF THE CONTRACT PRICE WILL BE BASED UPON THE LUMP SUM BID PLUS OR MINUS THE WORK ADDED OR DELETED BASED UPON THE ADJUSTMENT UNIT PRICES.

Item No.	Unit	Qty.	Item Description:	Unit Price	Extension
SANITARY SEWER OPEN CUT POINT REPAIR					
1	EA	5	Point Repair 5-foot (or less); 8 and 10-inch Pipe (Paved)		
2	EA	9	Point Repair 5-foot (or less); 8 and 10-inch Pipe (Unpaved)		
3	EA	3	Point Repair 5-foot (or less); 12-inch Pipe (Paved)		
4	EA	4	Point Repair 5-foot (or less); 12-inch Pipe (Unpaved)		
5	EA	2	Point Repair 5-foot (or less); 18-inch Pipe (Paved)		
6	EA	11	Point Repair 5-foot (or less); 18-inch Pipe (Unpaved)		
7	EA	4	Point Repair 5-foot (or less); 21-inch Pipe (Unpaved)		
8	EA	2	Point Repair 5-foot (or less); 24-inch Pipe (Paved)		
9	EA	3	Point Repair 5-foot (or less); 24-inch Pipe (Unpaved)		
10	EA	60	Additonal linear foot point repair; 8 and 10-inch Pipe (Paved)		
11	EA	100	Additonal linear foot point repair; 8 and 10-inch Pipe (Unpaved)		
12	EA	30	Additonal linear foot point repair; 12-inch Pipe (Paved)		
13	EA	40	Additonal linear foot point repair; 12-inch Pipe (Unpaved)		
14	EA	20	Additonal linear foot point repair; 18-inch Pipe (Paved)		
15	EA	100	Additonal linear foot point repair; 18-inch Pipe (Unpaved)		
16	EA	20	Additonal linear foot point repair; 21-inch Pipe (Unpaved)		
17	EA	20	Additonal linear foot point repair; 24-inch Pipe (Paved)		
18	EA	30	Additonal linear foot point repair; 24-inch Pipe (Unpaved)		
SANITARY SEWER CURED IN PLACE PIPE (CIPP) LINING (MAIN LINE)					
19	LF	7,165	8-Inch Main Sewer CIPP		
20	LF	600	10-Inch Main Sewer CIPP		
21	LF	2,065	12-Inch Main Sewer CIPP		
22	LF	96	18-Inch Main Sewer CIPP		
23	LF	972	24-Inch Main Sewer CIPP		
24	LF	21,600	Preliminary Cleaning and CCTV Mainline		
TOTAL LINE REPLACEMENT (INCLUDES SERVICE MAIN LINE WYE CONNECTIONS)					
25	LF	510	Open Cut or Pipe Burst; 8 and 10-inch Pipe (Paved)		
26	LF	1,034	Open Cut or Pipe Burst; 8 and 10-inch Pipe (Unpaved)		
27	LF	53	Open Cut or Pipe Burst; 16-inch Pipe (Paved)		
SERVICE LATERAL REPAIR/REHABILITATION					

Bidder: _____

BASE BID

NOTE: IN THE EVENT OF DISCREPANCY, UNIT PRICE SHALL GOVERN. THE LUMP SUM CONTRACT PRICE WILL BE SUBJECT TO ADJUSTMENT ACCORDING TO FINAL MEASURED, USED, OR DELIVERED QUANTITIES BASED ON THE ADJUSTMENT UNIT PRICES LISTED BELOW. THE CITY MAY ADD OR DELETE ANY QUANTITY OF WORK TO THE PROJECT AS SPECIFIED IN SUPPLMENTARY CONDITION SC-11.04 C. THE ADJUSTMENT OF THE CONTRACT PRICE WILL BE BASED UPON THE LUMP SUM BID PLUS OR MINUS THE WORK ADDED OR DELETED BASED UPON THE ADJUSTMENT UNIT PRICES.

Item No.	Unit	Qty.	Item Description:	Unit Price	Extension
28	EA	38	Open Cut Replacement of Service Lateral Connection		
29	LF	200	Open Cut Lateral Replacement to Beyond 5-feet		
30	EA	103	Lateral Connection Full Wrap CIPP Short Liner		
31	EA	31	Lateral Connection Full Wrap CIPP Long Liner		
32	LF	80	Lateral CIPP Long Liner to Easement (backyard) Beyond 5-feet		

Bidder: _____

BASE BID

NOTE: IN THE EVENT OF DISCREPANCY, UNIT PRICE SHALL GOVERN. THE LUMP SUM CONTRACT PRICE WILL BE SUBJECT TO ADJUSTMENT ACCORDING TO FINAL MEASURED, USED, OR DELIVERED QUANTITIES BASED ON THE ADJUSTMENT UNIT PRICES LISTED BELOW. THE CITY MAY ADD OR DELETE ANY QUANTITY OF WORK TO THE PROJECT AS SPECIFIED IN SUPPLMENTARY CONDITION SC-11.04 C. THE ADJUSTMENT OF THE CONTRACT PRICE WILL BE BASED UPON THE LUMP SUM BID PLUS OR MINUS THE WORK ADDED OR DELETED BASED UPON THE ADJUSTMENT UNIT PRICES.

Item No.	Unit	Qty.	Item Description:	Unit Price	Extension
MANHOLE REHABILITATION					
33	EA	5	Remove and Replace Manhole		
34	EA	163	Replace Frame & Cover - Paved (Adjustable Casting)		
35	EA	123	Replace Frame & Cover - Paved (Standard Casting)		
36	EA	366	Replace Frame & Cover - Unpaved (Standard Casting)		
37	EA	5	Replace Cone		
38	VF	1,060	Cementitious Liner (Vehicle Access < 150)		
39	VF	139	Cementitious Liner (Vehicle Access 150-250)		
40	VF	115	Cementitious Liner (Vehicle Access 250-350)		
41	VF	32	Cementitious Liner (Vehicle Access > 350)		
42	EA	32	Rebuild Bench & Trough		
ALLOWANCE					
43	LS	1	Allowance		$300,000.00
			Adjustment Unit Price Extension Subtotal Table A - Base Bid (Add Line Items 1-43)		

THE LUMP SUM ITEMS BELOW SHALL NOT BE ADJUSTED REGARDLESS OF THE FINAL QUANTITY OF THE ADJUSTMENT UNIT PRICE ITEMS LISTED ABOVE. THE CONTRACTOR REMAINS RESPONSIBLE FOR MAINTAINING THE BONDS AND INSURANCE AS NECESSARY TO COVER THE FINAL CONTRACT VALUE AS ADJUSTED USING THE ADJUSTMENT UNIT PRICE ITEMS ABOVE. BID PRICE FOR LUMP SUM ITEMS 31 AND 32 SHALL NOT EXCEED THE LIMITS INDICATED IN THE ITEM DESCRIPTION.

44	LS	1	Mobilization (Shall not exceed 3.5% of Table A Adjustment Unit Price Extension Subtotal)		
45	LS	1	Bonds and Insurance (Shall not exceed 1.5% of Table A Adjustment Unit Price Extension Subtotal)		
46	LS	1	Final Completion, Demobilization, Record Drawings, Close-Out (Shall not be less than $10,000 on the Schedule of Values)		
			Lump Sum Unit Price Subtotal Table A - Base Bid (Add Line Items 44-46)		
			Total Table A - Base Bid (Adjustment Unit Price Extension Subtotal plus Lump Sum Unit Price Subtotal)		

NOTE: IN DETERMINING THE LOWEST AND BEST BID, THE LOWEST BID WILL BE ANY COMBINATION OF THE BASE BID AND BID ALTERNATE 1 SELECTED BY THE CITY DURING THE BID EVALUATION. THE CITY MAY PERFORM THE DETERMINATION SOLELY ON THE BASE BID OR ON THE BASE BID PLUS BID ALTERNATE 1.

Bidder: _____

CITY OF FOUNTAINS
HEART OF THE NATION
KANSAS CITY
MISSOURI

ALLOWANCE FORM

Project \ Contract Number: 81000691\1545

Project Title: I/I Reduction Line Creek/Rock Creek Areas 3 & 4

Allowance No.:	Allowance Description:	Allowance in Figures:
1	Additional work requested by the Owner that is not specifically stated in the contract documents.	$300,000.00

CITY OF FOUNTAINS
HEART OF THE NATION

KANSAS CITY
MISSOURI

BID BOND

Project/Contract Number: 81000691/1545

Project Title: I/I Reduction: Line Creek/Rock Creek Areas 3 & 4

Bond Number _____

KNOW ALL MEN BY THESE PRESENTS: That _____ of _____, as Principal, and _____ as Surety, hereby bind themselves, their heirs, executors, administrators, successors and assigns, jointly and severally, firmly by these presents unto KANSAS CITY, MISSOURI, a constitutionally chartered municipal corporation, as Obligee, in the sum of

_____Dollars ($_____), lawful money of the United States.

WHEREAS, Principal is herewith submitting its Bid to enter into a contract with Kansas City for the above referenced project,

NOW, THEREFORE the condition of this obligation is such that if the Principal is awarded the contract the Principal will, within the time required, enter into a contract and give a good and sufficient surety bonds to secure the performance of the terms and conditions of the contract and for the prompt payment of all labor and material furnished in the prosecution thereof as required by the contract documents, then this obligation shall be void; otherwise the Principal and Surety will immediately pay unto the Obligee the full amount of this bond as liquidated damages for failure to fulfill the conditions of this obligation, but in no event shall the Surety's liability exceed the penal sum hereof.

Signed, sealed and delivered this _____ day of _____. 2022.

BIDDER AND PRINCIPAL

Name, address and facsimile number of Bidder and Principal

_____

_____

_____

_____

I hereby certify that I have authority to execute this document on behalf of Bidder and Principal.

By: _____

Title:_____

(Attach corporate seal if applicable)

SURETY

Name, address and facsimile number of Surety:

_____

_____

_____

_____

I hereby certify that (1) I have authority to execute this document on behalf of Surety; (2) Surety has an A.M. Best rating of A- or better; (3) Surety is named in the current list of "Companies Holding Certificates of Authority as Acceptable Sureties on Federal Bonds and as Acceptable Reinsuring Companies" as published in Circular 570 (most current revision) by the Financial Management Service, Surety Bond Branch, U.S. Department of the Treasury; and (4) Surety is duly licensed to issue bonds in the State of Missouri and in the jurisdiction in which the Project is located.

By:_____

Title:_____

Date:_____

(Attach seal and Power of Attorney)

HRD INSTRUCTIONS

FOR CONSTRUCTION CONTRACTS

PART A. MINORITY/WOMEN BUSINESS ENTERPRISE REQUIREMENTS

I. City's MBE/WBE Program.

A. The City has adopted a Minority/Women Business Enterprise ("MBE/WBE") Program (Sections 3-421 through 3-469, Code of Ordinances) (the "Program") to implement the City's policy of supporting the fullest possible participation in City contracts and change orders of firms owned and controlled by minorities and women. Each construction contract may have an MBE and/or WBE goal for participation. An MBE or WBE goal is a numerical objective the City has set for the contract that may be awarded pursuant to these bid specifications. Goals are stated as a percentage of contract dollars. For example, if an MBE goal for a contract is 10% and a Bidder submits a bid of $100,000, the goal for MBE participation would equal $10,000. The specific MBE/WBE goals on this contract are set forth elsewhere in the bid specifications.

B. These Human Relations Department ("HRD") Forms & Instructions are part of the BIDDING DOCUMENTS and CONTRACT DOCUMENTS as defined in the General Conditions. By submitting a Bid, the Bidder agrees, as a material term of the contract, to carry out the City's MBE/WBE Program by making good faith efforts to include certified MBE/WBEs in the contract work to the extent of the goals listed for the contract and to the fullest extent consistent with submitting the lowest and best bid to the City. Bidder agrees that the Program is incorporated into this document and agrees to follow the Program. Although it is not a requirement that a Bidder in fact meet or exceed both the MBE and WBE Goals, it is a requirement for approval of the Bid that a Bidder objectively demonstrate to the City that good faith efforts have been made to meet the Goals. Bidders must attempt to meet both the MBE and WBE goals and request a waiver if either is not met.

C. The following HRD Forms are attached and must be used for MBE/WBE submittals:

1. Contractor Utilization Plan/Request for Waiver (HRD Form 8); and
2. Letter of Intent to Subcontract (HRD Form 00450.01); and
3. Timetable for MBE/WBE Utilization (HRD Form 10); and
4. Request for Modification or Substitution (HRD Form 11); and
5. Contractor Affidavit for Final Payment (Form 01290.14); and
6. Subcontractor Affidavit for Final Payment (Form 01290.15).

Warning: The City only gives MBE/WBE credit for a Bidder's use of City certified MBE/WBEs. A certified MBE/WBE firm is a firm that has been certified by the City's Human Relations Department as such. An MBE/WBE firm must be certified before the date on which the contractor utilization plan is due. Certified MBEs and WBEs are listed in the M/W/DBE Kansas City Mo. Online Directory, which is available on the City's website at www.kcmo.org. Before a Bidder submits a bid, Bidder should contact HRD and consult the directory to make sure any firm proposed for use for MBE/WBE participation has been certified.

II. Required Submissions Following Bid Opening.

A. Bidder must submit the following documents within forty-eight (48) hours of bid opening:

1. **Contractor Utilization Plan/Request for Waiver (HRD Form 8).** This form states a Bidder's plan to use specific certified MBE/WBEs in the performance of the contract and includes the following:

   a. The work to be performed by each MBE/WBE and the amounts each is to be paid for the work; and

   b. The name, address, race or ethnic origin, gender and employer identification number or social security number of each MBE/WBE that will perform the work.

   c. An automatic request for waiver in the event Bidder has not met or exceeded the MBE and/or WBE goals for the contract but believes that it has made good faith efforts to meet or exceed the goals and desires a waiver of the goals. If a waiver is requested, HRD will examine the Bidder's documentation of good faith efforts and make a recommendation to grant or deny the waiver. HRD will recommend a waiver be granted only if the Bidder has made good faith efforts to obtain MBE/WBE participation.

2. **Letter(s) of Intent to Subcontract (HRD Form 00450.01)**. A letter must be provided from each MBE/WBE listed on the Contractor Utilization Plan. These letters verify that the MBE/WBE has agreed to execute a formal agreement for the work and indicate the scope of work to be performed and the price agreed upon for the work.

III. Required Submission when Requested by City.

A. Bidder must submit the following documents when requested by City:

1. **Timetable for MBE/WBE Utilization (HRD Form 10).**

2. **Documentation of good faith efforts.**

IV. Required Monthly Submissions during term of Contract.

A. Bidder must submit the following document on a monthly basis if awarded the contract:

1. **M/WBE Monthly Utilization Report.** This report must be submitted to the Director by the 15th of each month. Failure to submit timely reports may result in delays in processing of current and future contract approvals and payment applications. The preferred method of submission of this report is through the B2GNow Diversity Management System (B2GNow) HRD Form 00485.01 may be submitted in lieu of the B2GNow system under certain conditions, with the consent of HRD.

V. Required Submittals for Final Contract Payment.

A. Contractor must submit the following documents with its request for final payment under the contract:

1. **Contractor Affidavit for Final Payment (Form 01290.14)**

2. **Subcontractor Affidavit(s) for Final Payment (Form 01290.15)**
3. **Final B2GNow Monthly Contract Audit Report with all payment audits confirmed.**

VI. Additional Submittals.

A. Contractor may be required to make additional submittals during the term of the Contract, including **Request for Modification or Substitution (HRD Form 11)**. Refer to Section IX, Modification of the Contractor Utilization Plan or Substitution of an MBE/WBE, for additional instructions on when this form must be submitted.

VII. MBE/WBE Participation Credit.

A. The following shall be credited towards achieving the goals:

1. The total contract dollar amount that a prime contractor has paid or is obligated to pay to a subcontractor that is a certified MBE or WBE, except as otherwise expressly provided for herein.
2. The total contract dollar amount that a prime contractor that is a certified MBE or WBE performed itself.
3. Sixty percent (60%) of the total dollar amount paid or to be paid by a prime contractor to obtain supplies or goods from a supplier who is a certified MBE or WBE.
4. Ten percent (10%) of the total dollar amount paid or to be paid by a prime contractor to obtain supplies or goods from a supply broker who is a certified MBE or WBE.
5. One hundred percent (100%) of the total dollar amount paid or to be paid by a prime contractor to a manufacturer of construction supplies who is a certified MBE or WBE.
6. Subcontractor participation with a lower tier MBE/WBE subcontractor using one of the above methods of participation.

B. **NO CREDIT**, however, will be given for the following:

1. Participation in a contract by a MBE or WBE that does not perform a commercially useful function as defined by the Program; and
2. Any portion of the value of the contract that an MBE or WBE subcontractor subcontracts back to the prime contractor or any other contractor who is not a qualified MBE/WBE; and
3. Materials and supplies used on the contract unless the MBE/WBE is responsible for negotiating the price, determining quality and quantity, ordering the materials and installing (where applicable) and paying for material itself; and
4. Work performed by an MBE or WBE in a scope of work other than that in which the MBE or WBE is currently certified.

VIII. Methods for Securing Participation of MBE/WBEs and Good Faith Efforts.

A. A bidder is required to make good faith efforts to achieve the MBE/WBE goals. Good faith efforts are efforts that, given all relevant circumstances, a Bidder actively and

aggressively seeking to meet the goals can reasonably be expected to make. Good faith efforts must be made before the Bidder submits a Contractor Utilization Plan, in other words, within 48 hours of bid opening. However, efforts made to increase participation of MBEs and WBEs following submission of the CUP can be considered as evidence of good faith efforts to meet the goals.

B. In evaluating good faith efforts, the Director of HRD will consider whether the Bidder has performed the following, along with any other relevant factors:

1. Advertised for at least 15 calendar days prior to the bid or proposal due date opportunities to participate in the contract in general circulation media, trade and professional association publications, small and minority business media, and publications of minority and women's business organizations which are included in a list along with their current contact information identified on the directory as the list of publications available to publish such advertisements, which list shall be updated by HRD no less than every three (3) month.

2. Sent written notices at least fifteen (15) calendar days prior to the bid or proposal due date containing the information required in section (9) below, by certified mail, e-mail, or facsimile, to at least 80% of MBEs and WBEs which are included in a list along with their contact information identified on the directory as the list of organizations available to receive such notices, which list shall be updated by HRD no less than every three (3) months.

3. Sent written notices, containing the information required by section (9) below, by certified mail, e-mail or facsimile, to at least 80% of MBEs and WBEs listed on the directory certified in the applicable scopes of work for the particular bid soliciting their participation in the contract at least 15 calendar days prior to the bid or proposal due date.

4. Attempted to identify portions of the work for qualified MBE and/or WBE participation in order to increase the likelihood of meeting the goals, including breaking down contracts into economically feasible units that take into consideration the capacity of available MBE/WBEs appearing on the HRD directory.

5. At any time prior to submission of the CUP or submittal of a request for modification of a CUP, requested assistance in achieving the goals from the director and acted on the director's recommendations.

6. Conferred with certified MBEs and WBEs which inquired about or responded to the bid solicitation and explained to such MBEs and WBEs the scope and requirements of the work for which their bids or proposals were solicited, and if not all certified MBEs and WBEs in the particular scopes listed on the directory have inquired about or responded to the bid solicitation for each scope of work, then contact by certified mail, e-mail or telephone the greater of ten (10) or 80% of additional certified MBEs and WBEs in the particular scopes of work listed on the directory and offer to confer with such MBEs and WBEs for such particular scope of work and request such MBEs and WBEs to submit a proposal.

7. Attempted to negotiate in good faith with certified MBEs and WBEs which responded to the bid solicitation or those certified MBEs and WBEs that were conferred with as contemplated in section (6) above, and other qualified MBEs and

WBEs, at the option of the bidder, proposer, or contractor, as applicable, to perform specific subcontracts, not rejecting them as unqualified without sound reasons based on a thorough investigation of their capabilities by the bidder, proposer, or contractor; in the event an MBE or WBE is the low bid, but rejected as unqualified, the bidder, proposer, or contractor and the director or board, as applicable, shall provide sound reasons for rejecting such MBE or WBE.

8. Attended pre-bid meeting when such meetings were indicated in the solicitation of bids or otherwise by the bidder, proposer, or contractor, as applicable or by the director provided the director provides written direction to the bidder, proposer, or contractor at the time the goals are recommended.
9. Written notices and advertisements to be provided pursuant to sections (1), (2) and (3) above shall include the following information:
    a. The bid due date;
    b. The name of the project;
    c. The address or general location of the project;
    d. The location of plans and specifications for viewing;
    e. Contact information of the prime contractor;
    f. A general description of the scopes of work that are the subject of the solicitation;
    g. The goals established for the applicable contract, and if the goals are still subject to board approval, then a statement that the goals as stated are preliminary and are subject to board approval;
    h. If the project or any portion of the project is subject to prevailing wage then a statement that all or a portion of the project will be subject to prevailing wage, as applicable; and if only a portion of the scopes are subject to prevailing wage, then identification of such scopes provided that such scopes are known as of the time of bid solicitation;
    i. The date and time of any pre-bid meeting(s), if any, which have been scheduled by the bidder, proposer, contractor or developer as of the bid solicitation; and

Any other information deemed relevant by the bidder, proposer, contractor or developer, as applicable, or the director to the extent the director provides written direction to the bidder, proposer, contractor or developer of such additional information at the time the goals are recommended by the director. 8. Within five (5) working days after drawing the bid specifications, sent certified letters, verifiable e-mails or proof of facsimiles to certified MBEs and WBEs listed in the M/W/DBE Kansas City Mo. Online Directory.

C. A Bidder may be required to give the City documentation to prove that it made good faith efforts. The Bidder will be contacted by the City with further instructions about when this documentation must be submitted.

IX. Modification of the Contractor Utilization Plan or Substitution of an MBE/WBE.

A. After bid opening, a Bidder or Contractor may need to substitute an MBE and/or WBE or request that the amount of MBE/WBE participation listed in its Contractor Utilization Plan be modified. Bidder or Contractor must file a **Request for Modification or Substitution (HRD Form 11) prior to actual substitution and within a reasonable time after learning that a modification or substitution is necessary.** The Director may approve substitutions or modifications and upon approval, the modifications and substitutions will become an amendment to the Contractor Utilization Plan. Modifications or substitutions may be approved when:

1. The Director finds that the Bidder or Contractor made and provided evidence of good faith efforts to substitute the MBE/WBE listed on the Contractor Utilization Plan with other certified MBE/WBEs for the scope of work or any other scope of work in the contract; and
2. The Bidder or Contractor has not attempted intentionally to evade the requirements of the program and it is in the best interests of the City to allow a modification or substitution; and
3. The Director also finds one of the following:
   a. The listed MBE/WBE is non-responsive or cannot perform; or
   b. The listed MBE/WBE has increased its previously quoted price to the bidder, proposer or contractor without a corresponding change in the scope of the work; or
   c. The listed MBE/WBE has committed a material default or breach of its contract with the contractor; or
   d. Requirements of the scope of work of the contract have changed and render subcontracting not feasible or not feasible at the levels required by the goals established for the contract; or
   e. The listed MBE/WBE is unacceptable to the contracting department; or
   f. The listed MBE/WBE thereafter had its certification revoked; or

B. A modification shall not be made unless the modification or substitution has first been requested and approved by the Director. Once a modification has been made, a Construction Contractor Employee Identification Report (HRD Form 0485.04) for the newly approved subcontractor must be submitted at least ten (10) days prior to the approved subcontractor commencing work on a City contract.

X. Appeals.

A. In conformance with the Act, appeals may be made to the City Fairness in Construction Board or Fairness in Professional Services and Goods Board on the following:

1. The grant or denial of a Request for Waiver;
2. Substitution for an MBE/WBE listed on a Contractor Utilization Plan;
3. Modification of the percentage of MBE/WBE participation on a Contractor Utilization Plan;

4. Liquidated Damages;
5. The amount of MBE/WBE credit the Contractor may receive for MBE/WBE participation identified in the contractor utilization plan.

B. Any appeal must be filed in writing with the Director within fifteen (15) calendar days of notice of the determination. Mailing, faxing, personal delivery or posting at HRD of determinations shall constitute notice. The appeal shall state with specificity why the Bidder or Contractor believes the determination is incorrect

C. Failure to file a timely appeal shall constitute a waiver of a Bidder's or Contractor's right to appeal such determination and such person shall be estopped to deny the validity of any determination which could have been timely appealed.

XI. Access to Documents and Records.

A. By submitting a Bid, each Bidder agrees to permit the City, its duly authorized agents or employees, access at all reasonable times to all books and business records of Bidder as may be necessary to ascertain compliance with the requirements of this document and the Act, within ten (10) calendar days of the date of the written request.

B. All Bidders agree to cooperate with the contracting department and HRD in studies and surveys regarding the MBE/WBE program.

XII. Miscellaneous.

A. A Bidder or Contractor shall bear the burden of proof with regard to all issues on appeal.

B. In the event of any conflict between this document and the Program, the provisions of the Program shall control. The terms used in this document are defined in the Program.

C. Oral representations are not binding on the City.

D. The City Council may waive the requirements of this document and the Program and award the contract to the lowest and best bidder if the City Council determines a waiver is in the best interests of the City.

E. The Director may grant extensions of time to Bidders to submit Letters of Intent to Subcontract (HRD Form 00450.01).

XIII. Liquidated Damages – MBE/WBE Program.

A. If Contractor fails to achieve the MBE/WBE goals stated in its Contractor Utilization Plan, as amended, the City will sustain damages, the exact extent of which would be difficult or impossible to ascertain. Therefore, in order to liquidate those damages, the monetary difference between either (1) the amount of the MBE/WBE goals set forth in the Contractor Utilization Plan, as amended, or (2) the goals established (whichever is lower) and the amount actually paid to qualified MBEs and WBEs for performing a commercially useful function will be deducted from the Contractor's payments as liquidated damages. In determining the amount actually paid to qualified MBEs and WBEs, no credit will be given for the portion of participation that was not approved by the Director, unless the Director determines that the Contractor acted in good faith. No deduction for liquidated damages will be made when, for reasons beyond the control of the Contractor, the MBE/WBE participation stated in the Contractor Utilization Plan, as amended and approved by the Director is not met.

PART B. CONSTRUCTION EMPLOYMENT PROGRAM REQUIREMENTS

IMPORTANT: This Part B is applicable to City construction contracts estimated by the City prior to solicitation as: (1) requiring more than 800 construction labor hours and (2) valued in excess of $300,000.00. This program is distinguished from the M/WBE Program in that it is based on workforce hours of the Bidder and *all* its participating subcontractors rather than the actual contract value of work. The instructions herein detail the specifics related to this program. This program is in *addition* to the M/WBE program.

I. City's Construction Employment Program.

A. The City has adopted a Construction Employment Program (Sections 3-501 through 3-525, Code of Ordinances) (the "Workforce Program" or "Program") to implement the City's policy of supporting the fullest possible utilization of minority and women workers in the construction industry.

B. The minimum workforce goals are currently set by ordinance at 10% for minorities and 2% for women. These goals are separate from M/WBE goals. Public recognition may be provided if the bidder achieves at least twice the minimum participation.

C. Construction contracts subject to the Workforce Program and the company-wide and project-specific workforce goals ("workforce goals") are those contracts to construct, reconstruct, improve, enlarge or alter any fixed work that is estimated by the City prior to solicitation to: (1) require <u>more than</u> 800 construction labor hours, (2) has estimated costs that <u>exceed $300,000.00</u>, and (3) involve the expenditure of public funds.

D. The successful bidder may meet company-wide goals by counting the bidder's utilization of minorities and women throughout the Kansas City metropolitan statistical area. . In addition, the successful Bidder is responsible to ensure that it and its subcontractors cumulatively make good faith efforts to meet project-specific goals for utilization of minorities and women.

E. These Human Relations Department ("HRD") Forms & Instructions are part of the BIDDING DOCUMENTS and CONTRACT DOCUMENTS as defined in the General Conditions. By submitting a Bid, the Bidder agrees, as a material term of the contract, to carry out the City's Construction Employment Program by making good faith efforts to utilize minority and women workers to the fullest extent consistent with submitting the lowest and best bid to the City. Bidder agrees that the Program is incorporated into this document and agrees to follow the Program. Although it is not a requirement that a Bidder in fact meet or exceed the construction employment goals to receive approval from HRD, a Bidder not doing so is required to objectively demonstrate to HRD that good faith efforts have been made.

F. The following HRD Forms are to be used for Construction Employment Program submittals:

1. Project Workforce Monthly Report (HRD Form 00485.02)
2. Company-Wide Workforce Monthly Report (HRD Form 00485.03)

II. Required Submissions.

A. Within forty-eight (48) hours after bid opening, the construction contractor shall submit the **Construction Employee Identification Report** (HRD Form 00485.03) and shall

include: the name, home address, job title, sex and race/ethnicity of each person working for the Prime. The individuals to be listed on the form are those which the construction contractor *anticipates* will be performing construction labor hours creditable towards the minimum workforce goals applicable to the construction contractor individually.

The following circumstances also require the submission of a Construction Employee Identification Report:

a. Prior to contract execution for those City construction contracts awarded pursuant to a request for proposals (RFP), the construction contractor shall submit a **Construction Employee Identification Report** (HRD Form 00485.03).

b. At least ten (10) days prior to the date upon which any subcontractor is to commence work under a City construction contract, the Prime shall submit a **Construction Employee Identification Report** (HRD Form 00485.03) for the subcontractor.

B. The HRD Director has established the B2GNow Diversity Management System ("B2GNOW") (an online reporting tool) as the preferred method for fulfilling reporting requirements of the Workforce Program. The HRD Director will allow paper submission of the following HRD Forms in lieu of on-line submission if the on-line submission process presents a hardship to the contractor:

1. **Project-Specific Workforce Monthly Report (HRD Form 00485.02)**
2. **Company-Wide Workforce Monthly Report (HRD Form 00485.03)**

C. Bidder must submit the following documents through B2GNow or in paper format on a monthly basis if awarded the contract:

1. **Project Workforce Monthly Report (HRD Form 00485.02).** This report is contract specific. This report must be submitted to the Director by the 15th of each month for the Contractor and each subcontractor. It will be utilized to report the Contractor's own workforce compliance data with regard to the City's construction contract. Failure to submit timely reports may result in delays in processing of current and future contract approvals and payment applications.

2. **Company-Wide Workforce Monthly Report (HRD Form 00485.03).** This report is not contract specific; it is used to report on the utilization of women and minorities, by trade, company-wide. This report must be submitted to the Director by the 15th of each month. It will be utilized to report the Contractor's own workforce compliance data with regard to every contract (both privately and publicly funded) that the Contractor has in progress throughout the Kansas City Metropolitan Statistical Area. Failure to submit timely reports may result in delays in processing of current and future contract approvals and payment applications.

III. Submittal Required for Final Contract Payment.

A. The final Project Workforce Monthly Report(s) and Company-Wide Workforce Monthly Report must be submitted before final payment will be made and/or retainage released. Contractor shall note the submittal of the final reports by notation in the box entitled "Final Report"

IV. Methods for Securing Workforce Participation and Good Faith Efforts.

A. A bidder is required to make good faith efforts to achieve the construction employment goals and ensure its subcontractors are making good faith efforts to achieve the construction employment goals. If a Bidder or its subcontractors will be unable to secure enough minority and female participation to meet or exceed the construction employment goals, a bidder must, within a reasonable time after so learning, request a waiver or modification of the goals by the Director of HRD. The Director will request evidence of the Bidder's and its' subcontractors' good faith efforts to meet the goals. The Director will examine the Bidder's request and the Bidder's documentation of good faith efforts for itself and its subcontractors. The Director will examine the Bidder's request and the Bidder's documentation of good faith efforts and grant or deny a waiver or modification. The Director will grant a waiver or modification only if the Bidder has made good faith efforts to secure minority and female participation.

IMPORTANT: The Bidder's subcontractors on a city construction contract must meet the workforce goals collectively. The bidder is responsible to ensure the subcontractors make good faith efforts to meet the workforce goals. Bidders are required to include language in its subcontracts that ensure the subcontractors make good faith efforts to meet or exceed the workforce goals.

B. In evaluating good faith efforts, the Director will consider whether the Bidder and its subcontractors have performed the following:

1. For those bidders that are not signatories to a collective bargaining agreement with organized labor:

    a. Requested in writing the assistance of the Director with respect to efforts to promote the utilization of minorities and women in the workforce and acted upon the Director's recommendations; and

    b. Advertised in minority or women trade association newsletters and/or minority or women owned media at least 15 calendar days prior to the utilization of any construction services on the city construction contract and used terminology that sufficiently describes the work available, the pay scale, the application process, and anything else that one might reasonably be expected to be informed of relevant to the position being advertised; and

    c. Maintained copies of each advertisement and a log identifying the publication and date of publication; and

    d. Conducted real and substantial recruitment efforts, both oral and written, targeting resident, minority and women community-based organization, schools with a significant minority student population, and training organizations serving the recruitment area; and

    e. Established and maintained a current list of resident, minority and women recruitment sources, providing written notification to the recruitment sources of available employment opportunities, and maintained records of the notices submitted to the organizations and any responses thereto; and

    f. Maintained a current file for the time period of the city construction contract with the name, address, and telephone number of each resident, minority and

woman job applicant, the source of the referral, whether or not the person was hired, and in the event that the applicant was not hired, the reason therefore; and

g. Promoted the retention of minorities and women in its workforce with the goals of achieving sufficient annual hours for minorities and women to qualify for applicable benefits; and

h. Required by written contract that all subcontractors comply with the above efforts.

2. For those bidders that are signatories to collective bargaining agreements with organized labor:

a. Requested in writing from each labor union representing crafts to be employed that:

i. the labor union make efforts to promote the utilization of residents of the City, minorities and women in the workforce; and

ii. the labor union identify any residents of the City, minorities and women in its membership eligible for employment; and

b. Collaborated with labor unions in promoting mentoring programs for journeypersons intended to assist minorities and women in increasing retention with the goals of achieving sufficient annual hours to qualify for applicable benefits; and

c. Maintained a current file with the name, address, and telephone number of each resident, minority and women worker identified by the labor union, whether or not the person was hired, and in the event the person was not hired, the reason therefore.

d. To the extent the good-faith efforts applicable to bidders that are signatories to collective bargaining agreements with organized labor conflict with the procedures implemented by the bidder in order to comply with the relevant bargaining agreement, the bidder shall substitute other procedures as may be approved by the Director in writing, in order to accomplish the purpose and intent of this section.

C. In the event workforce goals are not met or there is anticipation that goals will not be met, a Bidder will be required to give the City documentation to prove that it and/or it s subcontractors made good faith efforts. The Bidder will be contacted by the City with further instructions about when this documentation must be submitted.

V. Access to Documents and Records.

A. By submitting a Bid, each Bidder agrees to permit the City, its duly authorized agents or employees, access at all reasonable times to all books and business records of Bidder as may be necessary to ascertain compliance with the requirements of this document and the Program, within ten (10) days of the date of the written request. Each bidder further agrees to require, if awarded the contract, that every subcontractor permit the City the same access to documents and records.

B. All Bidders agree to cooperate with the contracting department and HRD in studies and surveys regarding the construction employment program.

VI. Appeals.

A. In conformance with the Program, appeals may be made to the Construction Workforce Board on the following:

1. Determinations by the Director that a contractor did not meet the construction employment goals and did not make a good faith effort to meet the goals;
2. Recommendations by the Director to assess liquidated damages;
3. Recommendation by the Director that a contractor be declared ineligible to receive any city construction contract for a period of time up to one year.

B. Any appeal must be filed in writing with the Director within ten (10) working days of notice of the recommendation or determination. The appeal shall state with specificity why the Bidder or Contractor believes the recommendation or determination is incorrect.

C. Failure to file a timely appeal shall constitute a waiver of a Bidder's or Contractor's right to appeal such determination or recommendation and such person shall be estopped to deny the validity of any order, determination, recommendation or action of HRD which could have been timely appealed.

VII. Miscellaneous.

A. A Bidder or Contractor shall bear the burden of proof with regard to all issues on appeal.

B. The successful bidder may be required to meet with the Director of HRD or the Director's designee for the purpose of discussing the construction employment program, the bidder's efforts to realize the goals, and any other problems and/or issues affecting the realization of the goals or the program in general.

C. In the event of any conflict between this document and the Program, the provisions of the Program shall control. The terms used in this document are defined in the Program.

D. Oral representations are not binding on the City.

VIII. Failure to Meet Workforce Goals

A. If Contractor or its subcontractors fail to achieve the construction employment goals or make good faith efforts to achieve those goals without having previously obtained a waiver or modification of those goals, the City will sustain damages, the exact extent of which would be difficult or impossible to ascertain. These damages are magnified if the failure to abide by the requirements of the Workforce Program is recurring. Therefore, if the directory finds that the contractor or subcontractor have not met, or made good faith efforts to meet, the construction employment goals for any quarter , the director may:

1. Assess liquidated damages against the construction contractor, as specified in the city construction contract;
2. Require the contractor to attend mandatory training, as specified in the construction contract;
3. Declare the contractor ineligible to receive any city construction contract or participate as a subcontractor under any city construction contract for a period of time

up to six months, as specified in the construction contract.

IX. First Source Program

A. The City has established a labor force recruiting program intended to assist contractors in identifying, interviewing and hiring qualified job applicants residing in Kansas City, Missouri. While the contractor awarded a City construction contract is not prohibited from hiring persons residing outside Kansas City, Missouri, the recruiting resource provided for herein (the "First Source Program") must be utilized by the contractor subject to the construction employment goals as set forth in this **PART B, CONSTRUCTION EMPLOYMENT PROGRAM REQUIREMENTS**.

B. The City utilizes the services of the Full Employment Council, Inc., to administer the First Source Program. The contractor shall contact the Full Employment Council within 48 hours of contract award, regardless of whether the contractor has any hiring needs at that time, and within 48 hours following any job vacancy which the contractor reasonably anticipates filling during the term of the City construction contract. The contractor shall comply with the First Source Program requirements as implemented by the Full Employment Council unless otherwise excused in writing by the Director of HRD for good cause shown. To ensure compliance with the First Source Program, the contractor shall contact those persons at the Full Employment Council responsible for administering the program, which may be identified by visiting their website at www.feckc.org and clicking on the link for KCMO First Source Hiring Program. The contractor shall not hire any individual to provide construction services on a City construction contract unless the contractor has met the requirements of the First Source Program.

C. The contractor shall require that its subcontractors utilize the First Source Program to the same extent that the contractor is required to do so, and shall incorporate the requirements of this Section IX into every subcontract. Every subcontractor shall be required to contact the Full Employment Council within 48 hours of subcontract award, regardless of whether the subcontractor has any hiring needs at that time, and within 48 hours following any job vacancy which the subcontractor reasonably anticipates filling during the term of their subcontract on a City construction project.

CONTRACTOR UTILIZATION PLAN/REQUEST FOR WAIVER

Project Number _____

Project Title _____

_____ _____
(Department Project) Department

_____
(Bidder/Proposer)

STATE OF _____)
) ss
COUNTY OF _____)

I, _____, of lawful age and upon my oath state as follows:

1. This Affidavit is made for the purpose of complying with the provisions of the MBE/WBE submittal requirements on the above project and the MBE/WBE Program and is given on behalf of the Bidder/Proposer listed below. It sets out the Bidder/Proposer's plan to utilize MBE and/or WBE contractors on the project.

2. The project goals are _____ **% MBE** and _____ **% WBE.** Bidder/Proposer assures that it will utilize a minimum of the following percentages of MBE/WBE participation in the above project:

BIDDER/PROPOSER PARTICIPATION:_____% MBE _____% WBE

3. The following are the M/WBE subcontractors whose utilization Bidder/Proposer warrants will meet or exceed the above-listed Bidder/Proposer Participation. Bidder/Proposer warrants that it will utilize the M/WBE subcontractors to provide the goods/services described in the applicable Letter(s) of Intent to Subcontract, copies of which shall collectively be deemed incorporated herein). ***(All firms <u>must</u> <u>currently</u> be certified by Kansas City, Missouri)***

   a. Name of M/WBE Firm _____
      Address _____
      Telephone No. _____
      I.R.S. No. _____

   b. Name of M/WBE Firm _____
      Address _____

Telephone No. _____
I.R.S. No. _____

c. Name of M/WBE Firm _____
Address _____
Telephone No. _____
I.R.S. No. _____

d. Name of M/WBE Firm _____
Address _____
Telephone No. _____
I.R.S. No. _____

e. Name of M/WBE Firm _____
Address _____
Telephone No. _____
I.R.S. No. _____

f. Name of M/WBE Firm _____
Address _____
Telephone No. _____
I.R.S. No. _____

(List additional M/WBEs, if any, on additional page and attach to this form)

4. The following is a breakdown of the percentage of the total contract amount that Bidder/Proposer agrees to pay to each listed M/WBE:

MBE/WBE BREAKDOWN SHEET

MBE FIRMS:

Name of MBE Firm	Supplier/Broker/Contractor	Subcontract Amount*	Weighted Value**	% of Total Contract

TOTAL MBE $ / TOTAL MBE %: $_____ _____%

WBE FIRMS:

Name of WBE Firm	Supplier/Broker/Contractor	Subcontract Amount*	Weighted Value**	% of Total Contract
_____	_____	_____	_____	_____
_____	_____	_____	_____	_____
_____	_____	_____	_____	_____
_____	_____	_____	_____	_____
_____	_____	_____	_____	_____
_____	_____	_____	_____	_____
_____	_____	_____	_____	_____
TOTAL WBE $ / TOTAL WBE %:		$_____		_____%

*"Subcontract Amount" refers to the dollar amount that Bidder/Proposer has agreed to pay each M/WBE subcontractor as of the date of contracting and is indicated here solely for the purpose of calculating the percentage that this sum represents in proportion to the total contract amount. Any contract amendments and/or change orders changing the total contract amount may alter the amount due an M/WBE under their subcontract for purposes of meeting or exceeding the Bidder/Proposer participation.

**"Weighted Value" means the portion of the subcontract amount that will be credited towards meeting the Bidder/Proposer participation. See HRD Forms and Instructions for allowable credit and special instructions for suppliers.

5. Bidder/Proposer acknowledges that the monetary amount to be paid each listed M/WBE for their work, and which is approved herein, is an amount corresponding to the percentage of the total contract amount allocable to each listed M/WBE as calculated in the MBE/WBE Breakdown Sheet. Bidder/Proposer further acknowledges that this amount may be higher than the subcontract amount listed therein as change orders and/or amendments changing the total contract amount may correspondingly increase the amount of compensation due an M/WBE for purposes of meeting or exceeding the Bidder/Proposer participation

6. Bidder/Proposer acknowledges that it is responsible for considering the effect that any change orders and/or amendments changing the total contract amount may have on its ability to meet or exceed the Bidder/Proposer participation. Bidder/Proposer further acknowledges that it is responsible for submitting a Request for Modification or Substitution if it will be unable to meet or exceed the Bidder/Proposer participation set forth herein.

7. If Bidder/Proposer has not achieved both the M/WBE goal(s) set for this Project, Bidder/Proposer hereby requests a waiver of the MBE and/or WBE goal(s) that Bidder/Proposer has failed to achieve

8. Bidder/Proposer will present documentation of its good faith efforts, a narrative summary detailing its efforts and the reasons its efforts were unsuccessful when requested by the City.

9. I hereby certify that I am authorized to make this Affidavit on behalf of the Bidder/Proposer named below and who shall abide by the terms set forth herein:

Bidder/Proposer primary contact: _____
Address: _____
_____
Phone Number: _____
Facsimile number: _____
E-mail Address: _____

By: _____
Title: _____
Date: _____
(Attach corporate seal if applicable)

Subscribed and sworn to before me this _____ day of _____, 2022.

My Commission Expires: _____ _____
Notary Public

CITY OF FOUNTAINS
HEART OF THE NATION
KANSAS CITY
MISSOURI

LETTER OF INTENT TO SUBCONTRACT

Check one:
Original LOI: ☐
Updated LOI: ☐

Project Name/Title _____

Project Location/Number _____

PART I: Prime Contractor_____ agrees to enter into a contractual agreement with M/W/DBE/Section 3 Subcontractor _____ who will provide the following goods/services in connection with the above-reference contract: [Insert a brief narrative describing goods/services to be provided. Broad Categorizations (e.g., "electrical," "plumbing," etc.) or the listing of NAICS Codes in which M/W/DBE Subcontractor is certified are insufficient and may result in denial of this Letter of Intent to Subcontract.]

_____

_____

_____

for an estimated amount of $_____ (or _____% of the total estimated contract value.)

M/WBE Vendor type:

☐ Subcontractor/manufacturer (counts as 100% of contract value towards goals)

☐ Supplier (counts as 60% of the total dollar amount paid or to be paid by a prime contractor for supplies or goods towards goals)

☐ Broker (counts as 10% of the total dollar amount paid or to be paid by a prime contractor for supplies or goods towards goals)

M/W/DBE/Section 3 Subcontractor is, to the best of Prime Contractor's knowledge, currently certified with the City of Kansas City's Human Relations Department to perform in the capacities indicated herein. Prime Contractor agrees to utilize M/W/DBE Subcontractor in the capacities indicated herein, and M/W/DBE Subcontractor agrees to work on the above-referenced contract in the capacities indicated herein, contingent upon award of the contract to Prime Contractor.

PART 2: This section is to be completed by the M/W/DBE subcontractor listed above. Please attach additional sheets as needed for more than one intended sub-tier contract. **IMPORTANT: Falsification of this document will result in denial and other remedies available under City Code.**

Select one:

☐ The M/W/DBE Subcontractor listed above **IS NOT** subcontracting any portions of the above-stated scope of work(s). (Continue to Part 3.)

☐ The M/W/DBE Subcontractor listed above **IS** subcontracting certain portions of the above stated scope of work(s) to:

(1) Company name: _____

Full address: _____
Street number and name City, State and Zip Code

Primary contact: _____
Name Phone

a) This subcontractor is (circle one): MBE WBE DBE N/A

i: If this subcontractor is an M/W/DBE certified with the City of Kansas City, Missouri, a separate Letter of Intent must be attached to this document.

ii. If this subcontractor is NOT a certified M/W/DBE certified with the City of Kansas City, Missouri, the firm must still be listed for reporting purposes but a Letter of Intent is not required.

b) Scope of work to be performed: _____

c) The dollar value of this agreement is: _____

PART 3:

NOTE: SIGNATURES AND NOTARIZATIONS REQUIRED FOR NEW LETTERS OF INTENT (LOI); <u>SIGNATURES ONLY</u> FOR UPDATED LOI (ADDING VALUE TO EXISTING CONTRACT).

PRIME CONTRACTOR BUSINESS NAME: _____

_____ _____
Signature: Prime Contractor Print Name

_____ _____
Title Date

State of)

County of)

I, _____, state that the above and foregoing is based on my best knowledge and belief.

Subscribed and sworn to before me, a notary public, on this
day of _____ , 20____

My Commission Expires: _____ _____
Notary Public

STAMP:

MWDBE SUBCONTRACTOR BUSINESS NAME: _____

_____ _____
Signature: Prime Contractor Print Name

_____ _____
Title Date

State of)

County of)

I, _____, state that the above and foregoing is based on my best knowledge and belief.

Subscribed and sworn to before me, a notary public, on this
day of _____ , 20____

My Commission Expires: _____ _____
Notary Public

STAMP:

TIMETABLE FOR MBE/WBE UTILIZATION

I, _____, acting in my capacity as _____
(Name) *(Position with Firm)*
of _____, with the submittal of this Timetable, certify that
(Name of Firm)
the following timetable for MBE/WBE utilization in the fulfillment of this contract is correct and true to the best of my knowledge.

ALLOTTED TIME FOR THE COMPLETION OF THIS CONTRACT
(Check one only)

15 days	___	75 days	___	135 days	___
30 days	___	90 days	___	150 days	___
45 days	___	105 days	___	165 days	___
60 days	___	120 days	___	180 days	___

Other _____ (Specify)

Throughout _____ Beginning 1/3 _____
Middle 1/3 _____ Final 1/3 _____
Beginning 1/3 _____% Middle 1/3 _____% Final 1/3 _____%

PLEASE NOTE: Any changes in this timetable require approval of the Human Relations Department in advance of the change.

If you have any questions regarding the completion of this form, please contact the Department of Human Relations at: (816) 513-1818**.**

_____
(Signature)

_____
(Position with Firm)

_____
(Date)

REQUEST FOR MODIFICATION OR SUBSTITUTION

*(This Form **must** be submitted to HRD to request substitutions for an MBE/WBE listed in the Contractor Utilization Plan or for modification of the amount of MBE/WBE participation listed in the Contractor Utilization Plan. This Form shall be an amendment to the Contractor Utilization Plan.)*

BIDDER/PROPOSER/CONTRACTOR: _____
ADDRESS: _____
PROJECT NUMBER OR TITLE: _____
AMENDMENT/CHANGE ORDER NO: (if applicable) _____

Project Goals:	_____% MBE	_____% WBE
Contractor Utilization Plan:	_____% MBE	_____% WBE

1. I am the duly authorized representative of the above Bidder/Contractor/Proposer and am authorized to request this substitution or modification on behalf of the Bidder/Contractor/Proposer.

2. I hereby request that the Director of HRD recommend or approve: (check appropriate space(s))

   a. ____ A substitution of the certified MBE/WBE firm _____,
   (Name of new firm)
   to perform _____,
   (Scope of work to be performed by new firm)

   for the MBE/WBE firm _____ which is currently
   (Name of old firm)
   listed on the Bidder's/Contractor's/Proposer's Contractor Utilization Plan to

   perform the following scope of work: _____.
   (Scope of work of old firm)

   b. ____A modification of the amount of MBE/WBE participation currently listed on the Bidder's/Contractor's/Proposer's Contractor Utilization Plan from

   _____ % MBE_____% WBE *(Fill in % of MBE/WBE Participation currently listed on Contractor Utilization Plan)*

   TO

   _____% MBE _____% WBE *(Fill in New % of MBE/WBE Participation requested for Contractor Utilization Plan)*

   c. Attach 00450.01 Letter of Intent to Subcontract letter for each new MBE/WBE to be added.
   d. Attach a copy of the most recent 00485.01 or on-line M/WBE Monthly Utilization Report

3. Bidder/Contractor/Proposer states that a substitution or modification is necessary because: (check applicable reason(s))

___The MBE/WBE listed on the Contractor Utilization Plan is non-responsive or cannot perform.

___The MBE/WBE listed on the Contractor Utilization Plan has increased its previously quoted price without a corresponding change in the scope of work.

___The MBE/WBE listed on the Contractor Utilization Plan has committed a material default or breach of its contract.

___Requirements of the scope of work of the contract have changed and make subcontracting not feasible or not feasible at the levels required by the goals established for the contract.

___The MBE/WBE listed on the Contractor Utilization Plan is unacceptable to the City contracting department.

___Bidder/Contractor/Proposer has not attempted intentionally to evade the requirements of the Act and it is in the best interests of the City to allow a modification or substitution.

4. The following is a narrative summary of the Bidder's/Contractor's/Proposer's good faith efforts exhausted in attempts to substitute the MBE/WBE firm named above which is currently listed on the Contractor Utilization Plan with other qualified, certified MBE/WBE firms for the listed scope of work or any other scope of work in the project:

_____
_____
_____
_____
_____
_____
_____
_____
_____

5. Bidder/Proposer/Contractor will present documentation when requested by the City to evidence its good faith efforts.

Dated:_____ _____
(Bidder/Proposer/Contractor) **"Company Name"**

By: _____
(Authorized Representative) "**signature"**

City of Kansas City, Missouri
Human Relations Department
Construction Contractor Employee Identification Report

Company Name: _____ **Prime's Name:** _____

Company Address: _____ **KCMO Project Name:** _____

Company City, State, Zip: _____ **KCMO Project Number:** _____

Name of Person Completing Report: _____ **Today's Date:** _____

Phone Number: _____

Email: _____ **City Department:** _____

Instructions:

1) Each applicable Prime Contractors **must complete this form for its company within 48 hours of bid opening**
2) The Human Relations Department strongly recommends usage of the electronic version of this form. This form may be obtained by visiting www.kcmo.gov website. The website is enabled with a "search" function on the Home page in the center titled "What are you looking for?". Type in the "What are you looking for?" field *Contract Central*. Click on the link to Standard City Contract Forms. Scroll down to *Construction Contractor Employee Identification Report* and click the link to open this document. Complete the fields in the Employee section; the *Official Use Only* section will automatically populate. **NOTE: This form can be printed and attached to other required Bid documents.**
3) All subcontractors shall be required to complete this form and submit to the Prime Contractor. For each subcontractor, the Prime must submit this form to City at least at least (10) days prior to the date the subcontractor shall commence work under a city construction contract.
4) Complete this form if you are the Prime contractor on a City construction project estimated over **$300,000 & over 800 man hours.**
5) Complete this form with data from your **current construction workforce** (no office personnel).
6) Prime contractor is responsible to ensure subcontractor completes this form as required in #3 above.

Official Use Only

Females		*KCMO Resident*
African American	0	0
Asian/Pacific Islander American	0	0
Caucasian American	0	0
Hispanic/Latino American	0	0
Native American	0	0
Other	0	0
	0	0

Males		*KCMO Resident*
African American	0	0
Asian/Pacific Islander American	0	0
Caucasian American	0	0
Hispanic/Latino American	0	0
Native American	0	0
Other	0	0
	0	0

Number of KCMO Residents	0
Number of Journeyman	0
Number of Apprentice	0

	Journeyman	*Apprentice*
Foreman/Supervisor	0	--
Asbestos Worker	0	0
Boilermaker	0	0
Bricklayer	0	0
Carpenter	0	0
Cement Mason	0	0
Electrician	0	0
Elevator Constructor	0	0
Glazier	0	0
Iron Worker	0	0
Laborer	0	0
	0	0

	Journeyman	*Apprentice*
Operating Engineer	0	0
Painter	0	0
Pipe Fitter/Plumber	0	0
Plasterer	0	0
Roofer	0	0
Sheet Metal	0	0
Sprinkler Fitter	0	0
Truck Driver	0	0
Welder	0	0
Other	0	--
	0	0

Company Name: 0 KCMO Project Name: 0 KCMO Project Number: 0

	Name		Job Title (*use drop down menu*)	Address	City	State	Zip Code	KCMO Resident	Gender	Ethnicity
	Last	First								
1										
2										
3										
4										
5										
6										
7										
8										
9										
10										
11										
12										
13										
14										
15										

Company Name: 0 KCMO Project Name: 0 KCMO Project Number: 0

	Name		Job Title (*use drop down menu*)	Address	City	State	Zip Code	KCMO Resident	Gender	Ethnicity
	Last	First								
16										
17										
18										
19										
20										
21										
22										
23										
24										
25										
26										
27										
28										
29										
30										
31										
32										
33										
34										
35										
36										
37										
38										
39										
40										
41										
42										
43										
44										
45										
46										
47										
48										
49										

Company Name: 0 KCMO Project Name: 0 KCMO Project Number: 0

	Name		Job Title (*use drop down menu*)	Address	City	State	Zip Code	KCMO Resident	Gender	Ethnicity
	Last	First								
50										
51										
52										
53										
54										
55										
56										
57										
58										
59										
60										
61										
62										
63										
64										
65										
66										
67										
68										
69										
70										
71										
72										
73										
74										
75										
76										
77										
78										
79										
80										
81										
82										
83										

CITY OF FOUNTAINS
HEART OF THE NATION
KANSAS CITY
MISSOURI

AFFIDAVIT OF TRAINING PROGRAM

This form must be submitted within 48 hours of Bid Opening

Bidder _____

Project Title: I/I Reduction: Line Creek Rock Creek Areas 3 & 4
Project/Contract Number: 81000691/81000802

STATE OF MISSOURI)
) ss:
COUNTY OF _____)

After being duly sworn the person whose name and signature appears below hereby states under penalty of perjury that:

1. I am the duly authorized officer of the business indicated above ("Bidder") and I make this affidavit on behalf of Bidder.
2. Bidder certifies that it presently participates in a training program that facilitates entry into the construction industry and which may include an on-the-job or in-house training program, further described as follows:

_____

_____

_____

_____

_____

_____(attach additional pages, if necessary)

3. If requested by the City, Bidder agrees to provide City further documentation of, or other information about, this training program within 48 hours of the request.
4. Bidder acknowledges that failure to submit this form to the City within 48 hours of the Bid Opening will automatically render its bid non-responsive.

I am authorized to make this Affidavit on behalf of the Bidder named below as:

_____ of _____
(Title) (Name of Bidder)

Dated: _____ By: _____
(Affiant)

Subscribed and sworn to before me this _____ day of _____, 20____.

My Commission Expires: _____ _____
Notary Public

HRD MONTHLY REPORTING INSTRUCTIONS

M/WBE Monthly Utilization Report Instructions

1. MBE/WBE Reporting applies to Contracts that have approved MBE/WBE goals assigned.
2. The City will utilize a web based MBE/WBE Reporting System in the administration of this Contract. This web based application database is a collaboration tool selected and provided by City, which will allow Contractors and Consultants/Subcontractors and Subconsultants to enter data and report on compliance.

Prevailing Wage Certified Payroll Report Instructions

1. Prevailing Wage Certified Payroll Report applies to Contracts that include Prevailing Wage or Davis Bacon Provisions.
2. This web based application database is provided by City for reporting certified payrolls and other related prevailing wage data.
3. Computer Requirements: Minimum Intel Pentium® 4 Processor 2.4 GHz or equivalent processor with 512MB of RAM; recommended Centrino Duo® Processors 1.6 GHz or equivalent with 2GB of RAM, or higher.
    a. Computer Operation System: Windows XP, Windows Vista, or Windows 7
    b. Web Browser: Google Chrome
    c. Connection Speed/Minimum Bandwidth: DSL, ADSL or T1 Line for transferring a minimum of 3 Mbps Downstream and 512 Kbps Upstream
4. City will assist Contractor in providing training of personnel and Subcontractor's personnel.
5. Contractor and Subcontractors shall have the responsibility for visiting the web site and entering data in on timely basis, and as necessary to be in compliance with Prevailing Wage Requirements included in their contracts.

Workforce Monthly Report Instructions

1. Workforce Monthly Reporting only applies to Construction Contracts greater than $300,000 and greater than 800 projected labor hours.
2. The City will utilize a web based Reporting System in the administration of this Contract. This web based application database is a collaboration tool selected and provided by City, which will allow Contractors and Subcontractors to enter data and report on Workforce compliance.

CITY OF KANSAS CITY, MISSOURI
Human Relations Department
M/WBE MONTHLY UTILIZATION REPORT

Report Date:	**Project Name:**	**City Project Number:**	
Project Address:		**Contract Award Date:**	**City Vendor ID:**
General Contractor (GC):		**City Contract Number:**	**City Department Name**
Contact Person/Phone:		**General Contract Amount:** $	**Total Amount Paid By City To Date:** $
General Contractor Address:		**Contract Goals:**	_____% DBE _____% MBE _____% WBE
Email Address:		**Total Contract Days:**	**Completion Date:**

MBE/DBE Subcontractor	Date of Certification	Date of Subcontract	Subcontract Amount	% of Total Contract	Estimated Start date	Amount Paid This Period	Amount Paid To Date	% of Contract Paid to Date
WBE/DBE Subcontractor								
Totals								

Contractor should submit report by the 15th of each month.

Phillip Yelder, Director
Human Relations Department
414 E. 12th Street, 4th Floor
Kansas City, MO 64106
Phone: 816-513-1836
FAX: 816-513-1805

Narrative: _____

Report Submitted By: _____ **Date** _____

REMINDER: CONTRACTOR is responsible for meeting or exceeding the the D/M/WBE participation amounts in its Contractor Utilization Plan (CUP) as amended by any previously approved Request for Modification/Substitution. Any Change Orders or amendements modifying the amount CONTRACTOR is to be compensated will have correspondingly impacted the amount of compensation due D/M/WBEs for purposes of meeting or exceeding the Bidder/Proposer participation. CONTRACTOR is again advised to consider the effect of any Change Order or amendment, and to submit a Request for Modification/Substitution if appropriate.

M/WBE Monthly Utilization Report Instructions

1. Report Date: Insert the date the report was completed.
2. Project Name: Insert the name of the project for which the report is submitted.
3. City Project Number: Insert the Project Number assigned by the City.
4. Project Address: Insert the Project street address or location.
5. Contract Award Date: Insert the date the Contract was awarded.
6. City Vender ID: Insert the General Contractor's City Vender ID Number.
7. General Contractor: Insert the name of the General Contractor.
8. City Contract Number: Insert the City Contract Number.
9. Contact Person/Phone: Insert the name and phone number of the General Contractor's Contact person for the project.
10. General Contract Amount: Insert the Contract amount for the project, including all change orders or amendments.
11. Total Amount Paid by City to Date: Insert the total amount paid by the City to the General Contractor as of the end of the reporting period.
12. General Contractor Address: Insert the General Contractor's address.
13. Contract Goals: Insert the DBE, MBE, and WBE goals specified in the Contract.
14. Total Contract Days: Insert the total Contract days for this project.
15. Completion Date: Insert the scheduled maturity/completion date, including all change orders or amendments.
16. M/W/DBE Subcontractor: Insert the name of the M/W/DBE subcontractor.
17. M/W/DBE Date of Certification: Insert the date of certification of the M/W/DBE subcontractor.
18. M/W/DBE Date of Subcontract: Insert the date of the M/W/DBE subcontract.
19. M/W/DBE % of Total Contract: Insert the percentage of M/W/DBE Contract divided by General Contract amount.
20. M/W/DBE Estimated Start date: Insert the estimated start date of M/W/DBE subcontractor.
21. M/W/DBE Amount Paid This Period: Insert the dollar amount paid this period to the M/W/DBE subcontractor by the General Contractor.
22. M/W/DBE Amount Paid To Date: Insert the cumulative dollar amount paid to the M/W/DBE subcontractor by the General Contractor.
23. M/W/DBE % of Contract Paid to Date: Insert the percentage of the M/W/DBE Amount Paid to Date divided by the General Contractor's "Total Amount Paid By City to date"

Note #1: Complete one M/WBE report per project. Do not list more than one project on one report.

Note #2: If the Contract number and project number are the same, then list the number once.

Note#3: GC stands for General Contractor.

Project Specific Monthly Report

Human Relations Department - City of Kansas City Missouri

Report Date:		Reporting Period:		Project Description:	
Project Name:		Contractor:		Contract Awarded Date:	
City Project Number:		Contractor Address:		City Contract Number:	
Project Address:				City Vendor ID:	
		Contact Person/Phone:		Contractor Report ☐	Subcontractor Report☐
E-mail Address:				Final Cumulative Report:	☐ Yes ☐ No

Report the total monthly hours of work performed by all workers on the City Construction Contract. Enter the total hours on all lines and in all columns. Reported workforce hours should be based on payroll records.

JOB CATEGORIES	OVERALL TOTAL (Sum of all Columns, A thru F Male & Female)	A Total Hours White Employees		B Total Hours Black Employees		C Total Hours Hispanic Employees		D Total Hours Asian/Pacific Islander		E Total Hours Native American Employee		F Total Hours Other/Unknown Race Employee		G KCMO Resident Hours
		M	F	M	F	M	F	M	F	M	F	M	F	Total #
Foreman/Supervisor														
Asbestos Worker Journeyman														
Asbestos Worker Apprentice														
Boilermaker Journeyman														
Boilermaker Apprentice														
Bricklayer Journeyman														
Bricklayer Apprentice														
Carpenter Journeyman														
Carpenter Apprentice														
Cement Mason Journeyman														
Cement Mason Apprentice														
Electrician Journeyman														
Electrician Apprentice														
Elevator Constructor Journeyman														
Elevator Constructor Apprentice														
Glazier Journeyman														
Glazier Apprentice														
Iron Worker Journeyman														
Iron Worker Apprentice														
Laborer Journeyman														
Laborer Apprentice														
Operating Engineer Journeyman														
Operating Engineer Apprentice														
Painter Journeyman														
Painter Apprentice														
Pipe Fitter/Plumber Journeyman														
Pipe Fitter/Plumber Apprentice														
Plasterer Journeyman														
Plasterer Apprentice														
Roofer Journeyman														
Roofer Apprentice														
Sheet Metal Journeyman														
Sheet Metal Apprentice														
Sprinkler Fitter														
Sprinkler Fitter Apprentice														
Truck Driver Journeyman														
Truck Driver Apprentice														
Welder Journeyman														
Welder Apprentice														
Other														
Monthly Total Hours														-
Total % of Monthly Hrs.														

Contractor shall submit report by the 15th of each month.

Andrea Dorch, Director Human Relations Department
414 E. 12th Street, 4th Floor Kansas City, MO 64106
Phone: 816-513-1836 Email HRDcontractcompliance@kcmo.org

Report Submitted By: _____

Date: _____

Workforce Monthly Report Forms only apply to Construction Contracts greater than $324,000.01 with greater than 800 projected labor hours.

Workforce Monthly Report Instructions

(Instructions for Forms: 00485.02 Project Workforce Monthly Report 020408 and 00485.03 Company Wide Workforce Monthly Report 020408)

1. Report Date: Insert the date the report was completed.
2. Reporting Period: Insert the reporting month for hours performed.
3. Project Description: Insert the description/type of the project.
4. Project Name: Insert the name of the project for which the report is submitted.
5. Contractor: Insert the name of the Contractor.
6. Contract Award Date: Insert the date the Contract was awarded.
7. City Project Number: Insert the Project number assigned by the City.
8. Contractor Address: Insert the Contractor's address.
9. City Contract Number: Insert the City contract number.
10. City Vender ID: Insert the General Contractor's City Vender ID number.
11. Project Address: Insert the project street address or location.
12. Contact Person/Phone: Insert the name and phone number of the Contractor's contact person for the project.
13. Contractor Report / Subcontractor Report: Please check the box to indicate whether this is the contractor's report or subcontractors' summary report.
14. Email Address: Insert the contact person's email address.
15. Final Cumulative Report/Request for Retainage: Click box to mark whether report is final.
16. Job Categories: Select the appropriate Job Category for the worker.
17. Overall Total:* Insert the total number of labor hours per trade (do not include resident hours in this total).
18. Monthly Total Hours:* Insert the sum of all columns, A through G, male, female and residents for the month.
19. Total Percentages of Monthly Hours:* Insert the total percentages of hours by race, gender and Kansas City, Mo resident for the month.
20. Cumulative Total Hours: Insert the total number of hours in each category plus the previous months' cumulative total hours through the duration of the project.
21. Total Percent of Cumulative Hours:* Insert the total percent of hours worked for the project as a whole in each category.

Notes

Note #1: Complete two Monthly Project Reports per project. Do not list more than one project on one report.

a) One Workforce Monthly Project Report should list all data for the Contractor.
b) A separate Monthly Project Report should list all data consolidated for the subcontractors on the project.

Note #2: Contractors are required to submit four workforce forms required per month - (see instructions for Company-Wide Report for additional 2 forms:

a.) Contractors Monthly *Project* Report (Form No.: 00485.02);
b.) Subcontractors' Monthly *Project* Report (Form No.: 00485.02);
c.) Contractor's Monthly *Company Wide* Workforce Report (Form No.: 00485.03); and
d.) Subcontractors' Monthly *Company Wide* Workforce Report (Form No.: 00485.03).

Note #3: The last Workforce Monthly Project Reports and Workforce Monthly Company-Wide Reports will also serve as the final report. The "Yes" box should be checked in the Final Cumulative Report cell.

* Self Calculating Cell

Company-Wide Workforce Monthly Report

Human Relations Department - City of Kansas City, Missouri

Report Date:		Reporting Period:		Contract Awarded Date:	
Contractor:				City Vendor ID:	
Contact Person/Phone:		Contractor Address:		Contractor Report ☐	Subcontractor Report ☐
E-mail Address:		Have you hired any new construction workers this month?	☐ Yes ☐ No	#:	Final Cumulative Report: ☐ Yes ☐ No

Report total of all hours of work performed company-wide on all projects in the KCMO Metropolitan Statistical Area (MSA). Enter the total hours on all lines and in all columns. Workforce hours should be based on payroll records.

JOB CATEGORIES	OVERALL TOTAL (Sum of all Columns, A thru F Male & Female)	A Total Hours White Employees		B Total Hours Black Employees		C Total Hours Hispanic Employees		D Total Hours Asian/Pacific Islander		E Total Hours Native American Employee		F Total Hours Other/Unknown Race Employee		G KCMO Resident Hours
		M	F	M	F	M	F	M	F	M	F	M	F	Total #
Foreman/Supervisor														
Asbestos Worker Journeyman														
Asbestos Worker Apprentice														
Boilermaker Journeyman														
Boilermaker Apprentice														
Bricklayer Journeyman														
Bricklayer Apprentice														
Carpenter Journeyman														
Carpenter Apprentice														
Cement Mason Journeyman														
Cement Mason Apprentice														
Electrician Journeyman														
Electrician Apprentice														
Elevator Constructor Journeyman														
Elevator Constructor Apprentice														
Glazier Journeyman														
Glazier Apprentice														
Iron Worker Journeyman														
Iron Worker Apprentice														
Laborer Journeyman														
Laborer Apprentice														
Operating Engineer Journeyman														
Operating Engineer Apprentice														
Painter Journeyman														
Painter Apprentice														
Pipe Fitter/Plumber Journeyman														
Pipe Fitter/Plumber Apprentice														
Plasterer Journeyman														
Plasterer Apprentice														
Roofer Journeyman														
Roofer Apprentice														
Sheet Metal Journeyman														
Sheet Metal Apprentice														
Sprinkler Fitter														
Sprinkler Fitter Apprentice														
Truck Driver Journeyman														
Truck Driver Apprentice														
Welder Journeyman														
Welder Apprentice														
Other														
Total Monthly Hours														-
Total % of Hours														

Contractor shall submit report by the 15th of each month.

Andrea Dorch, Director Human Relations Department
414 E. 12th Street, 4th Floor, Kansas City, MO 64106
Phone: 816-513-1836 Email HRDcontractcompliance@kcmo.org

Report Submitted By: _____

Date: _____

CITY OF FOUNTAINS
HEART OF THE NATION

KANSAS CITY
MISSOURI

PRE-CONTRACT BIDDER'S CERTIFICATION

Project/Contract Number: 81000691/1545

Project Title: I/I Reduction: Line Creek Rock Creek Areas 3 & 4

STATE OF)
) SS
COUNTY OF)

Before me, the undersigned authority, personally appeared, who, being by me duly sworn deposed as follows:

I am authorized to make this affidavit on behalf of the named Bidder. I am of sound mind, capable of making this affidavit, and personally acquainted with the facts herein stated:

A. Bidder is current on payment of its Federal and State Income tax withholding and unemployment insurance payments, either in Missouri for companies doing business in Missouri, or in the state in which Bidder has its principal office; and

B. Bidder declares one of the following, regarding all work performed two (2) years immediately preceding the date of the Bid (check one):

☐ Contract by contract listing of all of Bidder's written notices of violations of any Federal or State prevailing wage statute in which prevailing wage penalties were assessed against the Bidder or paid by the Bidder (Complete and attach additional sheets if necessary):

1. _____
2. _____
3. _____

☐ There have been no written notices of violations of any Federal or State prevailing wage statute in which prevailing wage penalties were assessed against the Bidder or paid by the Bidder.

C. Bidder is currently in good standing with the Missouri Secretary of State or Bidder has filed a Registration of Fictitious Name with the Missouri Secretary of State.

_____
(Bidder's Name) (Date)

_____
Signature of Person Making This Affidavit

In witness whereof, I have hereunto subscribed my name and affixed my official seal this __day of, 2022.

CONTRACT REQUIRED SUBMISSIONS

Project/Contract Number: 81000691/1545
Project Title: I/I Reduction: Line Creek/Rock Creek Areas 3 & 4

These instructions are to assist Contractor in providing all necessary documents to enter into a contract with the City.

MISSOURI SECRETARY OF STATE BUSINESS ENTITY REGISTRATION

- ☐ For a corporation, current Certificate of Good Standing from the Missouri Secretary of State ((816) 889-2925 or (816) 889-2926 or a web site print-out, dated no more than ninety (90) days before the date furnished to the City – One Copy.
- ☐ For a business that is not a corporation and not doing business in the exact name of the proprietor, a copy from the Secretary of State, ((816) 889-2925 or (816) 889-2926 of the filed Registration of Fictitious Name dated no more than ninety (90) days before the date furnished to the City – One Copy.

EMPLOYEE ELIGIBILITY VERIFICATION AFFIDAVIT [Required if the contract exceeds $5,000.00]

- ☐ 00515.01 Employee Eligibility Verification Affidavit – One Executed Affidavit
- ☐ First and last pages of the E-Verify Program Memorandum of Understanding that your company has received from the U.S. Department of Homeland Security verifying enrollment in the program. For assistance, contact E-Verify Operations at 888-464-4218 – One Copy.

SUBCONTRACTORS LISTING [Applicable form provided]

- ☐ Non-Construction Subcontractors List – One Copy
- ☐ 01290.09 Subcontractors & Major Material Suppliers List – One Copy

PAYMENT BONDS (If applicable)

- ☐ Each copy of the Payment bond must be signed and properly dated by the following, as applicable:

  Corporation - A corporate officer authorized to sign on behalf of the corporation and the signature must be attested by a witness to the signature; OR

  Limited Liability Company - A member of the limited liability company authorized to sign on behalf of the company and a witness to the signature must attest the signature; OR

  Partnership - A partner authorized to sign on behalf of the partnership and the signature must be attested by a witness to the signature; OR

  Sole Proprietor - By the proprietor and the signature must be attested by a witness to the signature; OR

  Joint Venture - The parties to the Joint Venture authorized to sign on behalf of each party to the Joint Venture, or a person authorized by each party to the Joint Venture to sign on behalf of all parties to the Joint Venture; AND

  Surety - A person authorized by the Surety to sign on behalf of the Surety. A power of attorney issued by the Surety Company authorizing its representative to sign the Agreement must be attached to the Agreement and each copy.

PERFORMANCE AND MAINTENANCE BOND (If applicable)

- ☐ As applicable, each copy of the Performance and Maintenance bond must be signed and properly dated by:

  Corporation - A corporate officer authorized to sign on behalf of the corporation and the signature must be attested by a witness to the signature; OR

  Limited Liability Company - A member of the limited liability company authorized to sign on behalf of the company and a witness to the signature must attest the signature; OR

  Partnership - A partner authorized to sign on behalf of the partnership and the signature must be attested by a witness to the signature; OR

  Sole Proprietor - By the proprietor and the signature must be attested by a witness to the signature; OR

  Joint Venture - The parties to the Joint Venture authorized to sign on behalf of each party to the Joint Venture, or a person authorized by each party to the Joint Venture to sign on behalf of all parties to the Joint Venture; AND

  Surety - A person authorized by the Surety to sign on behalf of the Surety. A power of attorney issued by the Surety Company authorizing its representative to sign the Agreement must be attached to the Agreement and each copy.

CERTIFICATES OF INSURANCE [Sample form provided] - If you have any questions regarding requirements for insurance certificates, please contact the City's Risk Management Office, 816 513-1299.

- ☐ Provide a certificate of insurance for all insurance that may be required in the contract such as:

  Commercial General Liability
  Workers' Compensation and Employers' Liability
  Commercial Automobile Liability
  Railroad Protective Liability
  Environmental Liability
  Asbestos Liability
  Longshoremen's Insurance
  Property Insurance

- ☐ List the NAIC Number (National Association of Insurance Commissioners) or A.M. Best Number for each Insurer listed on the Certificate of Insurance.

- ☐ Certificate "Kansas City, Missouri" must named as an Additional Insured.

- ☐ Check the insurance requirements of the Contract. If Contract Documents require that other entities be included as additional insureds, each entity shall be listed on the certificate(s).

- ☐ Description of Operations must include Project/Contract Number and Project/Contract Title/Description as contained in the Contract Documents. The Certificate Holder and address block shall be completed as follows:

  Kansas City, Missouri
  [Name of applicable City Department]
  [Name of Contract Administrator, Buyer, or Project Manager]
  [Department Address]
  Kansas City, Missouri **[Zip Code]**

- ☐ If your insurance agent prepares an ACORD form, the automobile insurance must be "any auto" or better for acceptance by the City.

AFFIRMATIVE ACTION REQUIREMENTS

- ☐ Proposed Affirmative Action Program or a copy of a Certificate of Affirmative Action Compliance – One copy.

PRE-CONTRACT BIDDER'S CERTIFICATION (Prevailing Wage Contracts; Form provided)

- ☐ Submit form 00490 - Bidder's Pre-Contract Certification (provided).

HEALTH AND SAFETY PLAN (If applicable)

- ☐ Bidder's Health and Safety Plan – One copy or one CD Rom.

EMPLOYEE ELIGIBILITY VERIFICATION AFFIDAVIT

(Required for any contract with the City of Kansas City, Missouri in excess of $5,000.00)

STATE OF _____)
) ss
COUNTY OF _____)

On this _____ day of _____, 20___, before me appeared _____, personally known by me or otherwise proven to be the person whose name is subscribed on this affidavit and who, being duly sworn, stated as follows:

I am of sound mind, capable of making this affidavit, and personally swear or affirm that the statements made herein are truthful to the best of my knowledge. I am the _____ (title) of _____ (business entity) and I am duly authorized, directed or empowered to act with full authority on behalf of the business entity in making this affidavit.

I hereby swear or affirm that the business entity does not knowingly employ any person in connection with the contracted services who does not have the legal right or authorization under federal law to work in the United States as defined in 8 U.S.C. § 1324a(h)(3).

I hereby additionally swear or affirm that the business entity is enrolled in an electronic verification of work program operated by the United States Department of Homeland Security (E-Verify) or an equivalent federal work authorization program operated by the United States Department of Homeland Security to verify information of newly hired employees, under the Immigration Reform and Control Act of 1986, and that the business entity will participate in said program with respect to any person hired by the business entity to perform any work in connection with the contracted services. I have attached hereto documentation sufficient to establish the business entity's enrollment and participation in the required electronic verification of work program.

I am aware and recognize that unless certain contractual requirements are satisfied and affidavits obtained as provided in Section 285.530, RSMo, the business entity may face liability for violations committed by its subcontractors, notwithstanding the fact that the business entity may itself be compliant.

I acknowledge that I am signing this affidavit as the free act and deed of the business entity and that I am not doing so under duress.

_____
Affiant's signature

Subscribed and sworn to before me this _____ day of _____, 20____.

_____
Notary Public

My Commission expires:

Affidavit of Compliance With the Federal Consent Decree Regarding the City of Kansas City, Missouri Overflow Control Plan ("OCP")

Civil Action No. 4:10-cv-0487-GAF

STATE OF MISSOURI)

) ss.

COUNTY OF JACKSON)

I, _____, having full authority to act on behalf of _____, do solemnly swear under oath to the following:

I certify, under penalty of law, that the City has made an electronic copy of this Consent Decree available to this organization at the following web location: https://www.kcsmartsewer.us/home/showpublisheddocument/6428/637534718121930000. I further certify that the Consent Decree, along with appendices, have been reviewed in their entirety and that said review has been performed under my direction or supervision in accordance with a system designed to assure that qualified personnel properly evaluated and fully understand the information contained in this Consent Decree upon execution of any contract relating to such work, including, but not limited to, subcontractors, equipment providers, material suppliers, or sub-consultants.

_____

Signature of affiant

On this ____ day of _____, _____ before me, _____, a Notary Public in and for said state, personally appeared ( ), known to me to be the person who executed the within affidavit, and acknowledge to me that he/she executed the same for the purposes therein stated.

_____

Notary Public

My commission expires: _____

MISSOURI DEPARTMENT OF REVENUE

Form **5060**

Project Exemption Certificate

This form is to be completed and given to your contractor.

Exempt Entity and Project Information

Name of Exempt Entity Issuing the Certificate			Missouri Tax Exemption Number
Address	City	State	ZIP Code
E-mail Address			
Project Number	Project Begin Date (MM/DD/YYYY) ___ ___ / ___ ___ / ___ ___ ___ ___	Estimated Project End Date (MM/DD/YYYY) ___ ___ / ___ ___ / ___ ___ ___ ___	
Description of Project			
Project Location		Certificate Expiration Date (MM/DD/YYYY) ___ ___ / ___ ___ / ___ ___ ___ ___	

Provide a signed copy of this certificate, along with a copy of the exempt entity's Missouri Sales and Use Tax Exemption Letter to each contractor or subcontractor who will be purchasing tangible personal property for use in this project. It is the responsibility of the exempt entity to ensure the validity of the information on the certificate. The exempt entity must issue a new certificate if any of the information changes.

Signature of Authorized Exempt Entity	Printed Name of Authorized Exempt Entity	Date (MM/DD/YYYY) ___ ___ / ___ ___ / ___ ___ ___ ___

Contractor

The Missouri exempt entity named above hereby authorizes the purchase, without sales tax, of tangible personal property to be incorporated or consumed in the construction project identified herein and no other, pursuant to **Section 144.062, RSMo.** Under penalties of perjury, I declare that the above information and any attached supplement is true, complete, and correct.

Name of Purchasing Contractor	Signature of Contractor		Date (MM/DD/YYYY) ___ ___ / ___ ___ / ___ ___ ___ ___
Address	City	State	ZIP Code

Subcontractor

Contractors - Present this to your supplier in order to purchase the necessary materials tax exempt. Complete the Subcontractor portion if extending the certificate to your subcontractor. The contractor must sign the form in the space provided below.

Name of Purchasing Subcontractor			
Address	City	State	ZIP Code
Signature of Contractor	Contractor's Printed Name		Date (MM/DD/YYYY) ___ ___ / ___ ___ / ___ ___ ___ ___

Taxation Division
P.O Box 358
Jefferson City, MO 65105-0358

Phone: (573) 751-2836
Fax: (573) 522-1666
E-mail: salestaxexemptions@dor.mo.gov

Visit http://dor.mo.gov/business/sales/sales-use-exemptions.php for additional information.

State of Missouri

EXEMPTION FROM MISSOURI SALES AND USE TAX ON PURCHASES

Issued to:

CITY OF KANSAS CITY
414 E 12TH ST 3RD FLOOR
KANSAS CITY MO 64106

Missouri Tax ID Number: 12490466

Effective Date: 07/11/2002

Your application for sales/use tax exempt status has been approved pursuant to Section 144.030.1, RSMo. This letter is issued as documentation of your exempt status.

Purchases by your Agency are not subject to sales or use tax if within the conduct of your Agency's exempt functions and activities. When purchasing with this exemption, furnish all sellers or vendors a copy of this letter. This exemption may not be used by individuals making personal purchases.

A contractor may purchase and pay for construction materials exempt from sales tax when fulfilling a contract with your Agency only if your Agency issues a project exemption certificate and the contractor makes purchases in compliance with the provisions of Section 144.062, RSMo.

Sales by your Agency are subject to all applicable state and local sales taxes. If you engage in the business of selling tangible personal property or taxable services at retail, you must obtain a Missouri Retail Sales Tax License and collect and remit sales tax.

This is a continuing exemption subject to legislative changes and review by the Director of Revenue. If your Agency ceases to qualify as an exempt entity, this exemption will cease to be valid. This exemption is not assignable or transferable. It is an exemption from sales and use taxes only and is not an exemption from real or personal property tax.

Any alteration to this exemption letter renders it invalid.

If you have any questions regarding the use of this letter, please contact the Division of Taxation and Collection, P.O. Box 3300, Jefferson City, MO 65105-3300, phone 573-751-2836.

(DT6030)

CITY OF FOUNTAINS
HEART OF THE NATION

KANSAS CITY
MISSOURI

PERFORMANCE AND MAINTENANCE BOND

Project/Contract Number: 81000691/1545

Project Title: I/I Reduction: Line Creek Rock Creek Areas 3 & 4

KNOW ALL MEN BY THESE PRESENTS: That _____, as PRINCIPAL (CONTRACTOR), and _____, (SURETY), licensed to do business as such in the State of Missouri, hereby bind themselves and their respective heirs, executors, administrators, successors, and assigns unto Kansas City, Missouri, a constitutionally chartered municipal corporation, (OWNER), as obligee, in the penal sum of _____ Dollars ($ _____) for the payment whereof CONTRACTOR and SURETY bind themselves, their heirs, executors, administrators, successors and assigns, jointly and severally, firmly by these presents.

WHEREAS,

CONTRACTOR has entered into a Contract with OWNER for_____ which Contract, including any present or future amendment thereto, is incorporated herein by reference and is hereinafter referred to as the Contract.

NOW, THEREFORE, THE CONDITION OF THIS OBLIGATION is such that, if CONTRACTOR shall promptly and faithfully perform said Contract including all duly authorized changes thereto, and including any maintenance requirements contained therein, according to all the terms thereof, including those under which CONTRACTOR agrees to pay legally required wage rates including the prevailing hourly rate of wages in the locality, as determined by the Department of Labor and Industrial Relations or by final judicial determination, for each craft or type of workman required to execute the Contract and, further, shall defend, indemnify, and hold harmless OWNER from all damages, including but not limited to, liquidated damages, loss and expense occasioned by any failure whatsoever of said CONTRACTOR and SURETY to fully comply with and carry out each and every requirement of the Contract, then this obligation shall be void; otherwise, it shall remain in full force and effect.

WAIVER. That SURETY, for value received, hereby expressly agrees that no change, extension of time, alteration or addition to the terms of the Contract or to the Work to be performed thereunder, shall in any way affect the obligations of this Bond; and it does hereby waive notice of any such change, extension of time, or alteration or addition to the terms of the Contract or the Work to be performed thereunder.

IN WITNESS WHEREOF, the above parties have executed this instrument the ____ day of _____, 20__.

CONTRACTOR
Name, address and facsimile number of Contractor

_____
_____
_____
_____

I hereby certify that I have authority to execute this document on behalf of Contractor.

By: _____
Title:_____

(Attach corporate seal if applicable)

SURETY
Name, address and facsimile number of Surety:

_____
_____
_____
_____

I hereby certify that (1) I have authority to execute this document on behalf of Surety; (2) Surety has an A.M. Best rating of A-, V, or better; (3) Surety is named in the current list of "Companies Holding Certificates of Authority as Acceptable Reinsuring Companies: as published in Circular 570 (most current revision) by the Financial Management Service, Surety Bond Branch, U.S. Department of the Treasury; and (4) Surety is duly licensed to issue bonds in the State of Missouri and in the jurisdiction in which the Project is located.

By:_____
Title:_____
Date:_____

(Attach seal and Power of Attorney)

CITY OF FOUNTAINS
HEART OF THE NATION

KANSAS CITY
MISSOURI

PAYMENT BOND

Project/Contract Number: 81000691/1545

Project Title: I/I Reduction: Line Creek Rock Creek Areas 3 & 4

KNOW ALL MEN BY THESE PRESENTS: That _____, as PRINCIPAL (CONTRACTOR), and_____, (SURETY), licensed to do business as such in the State of Missouri, hereby bind themselves and their respective heirs, executors, administrators, successors, and assigns unto Kansas City, Missouri, a constitutionally chartered municipal corporation, (OWNER), as obligee, in the penal sum of _____ Dollars ($_____) for the payment whereof CONTRACTOR and SURETY bind themselves, their heirs, executors, administrators, successors and assigns, jointly and severally, firmly by these presents.

WHEREAS,

CONTRACTOR has entered into a contract with OWNER for_____, which Contract, including any present or future amendment thereto, is incorporated herein by reference and is hereinafter referred to as the Contract.

NOW, THEREFORE, THE CONDITION OF THIS OBLIGATION is such that, if in connection with the Contract, including all duly authorized modifications thereto, prompt payment shall be made to all laborers, subcontractors, teamsters, truck drivers, owners or other suppliers or for equipment employed on the job, and other claimants, for all labor performed in such work whether done for CONTRACTOR, a subcontractor, SURETY, a completion contractor or otherwise (at the full wage rates required by any law of the United States or of the State of Missouri, where applicable), for services furnished and consumed, for repairs on machinery, for equipment, tools, materials, lubricants, oil, gasoline, water, gas, power, light, heat, oil, telephone service, grain, hay, feed, coal, coke, groceries and foodstuffs, either consumed, rented, used or reasonably required for use in connection with the construction of the work or in the performance of the Contract and all insurance premiums, both for compensation and for all other kinds of insurance on the work, for sales taxes and for royalties in connection with, or incidental to, the completion of the Contract, in all instances whether the claim be directly against CONTRACTOR, against SURETY or its completion contractor, through a subcontractor or otherwise, and, further, if CONTRACTOR shall defend, indemnify and hold harmless OWNER from all such claims, demands or suits by any such person or entity, then this obligation shall be void; otherwise, it shall remain in full force and effect.

Any conditions legally required to be included in a Payment Bond on this Contract, including but not limited to those set out in §107.170 RSMo.are included herein by reference.

SURETY agrees that, in the event that CONTRACTOR fails to make payment of the obligations covered by this Bond, it will do so and, further, that within forty-five (45) days of receiving, at the address given below, a claim hereunder stating the amount claimed and the basis for the claim in reasonable detail, it (a) will send an answer to the claimant, with a copy to OWNER stating the amounts that are undisputed and the basis for challenging any amounts that are disputed, and (b) will pay any amounts that are undisputed. The amount of this Bond shall be reduced by and to the extent of any payment or payments made in good faith hereunder.

While this Bond is in force, it may be sued on at the instance of any party to whom any such payment is due, in the name of OWNER to the use for such party. OWNER shall not be liable for the payment of any costs or expenses of any such suit.

No suit shall be commenced or pursued hereunder other than in a state court of competent jurisdiction in Jackson, Clay or Platte County, Missouri, or in the United States District Court for the Western District of Missouri.

WAIVER. That SURETY, for value received, hereby expressly agrees that no change, extension of time, alteration or addition to the terms of the Contract or to the Work to be performed thereunder, shall in any way affect the obligations of this Bond; and it does hereby waive notice of any such change, extension of time, or alteration or addition to the terms of the Contract or the Work to be performed thereunder.

IN WITNESS WHEREOF, the above parties have executed this instrument the _____ day of_____ _____, 20____.

CONTRACTOR
Name, address and facsimile number of Contractor

_____
_____
_____
_____

I hereby certify that I have authority to execute
this document on behalf of Contractor.

By: _____
Title:_____

(Attach corporate seal if applicable)

SURETY
Name, address and facsimile number of Surety:

_____
_____
_____
_____

I hereby certify that (1) I have authority to execute this document on behalf of Surety; (2) Surety has an A.M. Best rating of A-. or better; (3) Surety is named in the current list of "Companies Holding Certificates of Authority as Acceptable Sureties on Federal Bonds and as Acceptable Reinsuring Companies" as published in Circular 570 (most current revision) by the Financial Management Service, Surety Bond Branch, U.S. Department of the Treasury; and(4) Surety is duly licensed to issue bonds in the State of Missouri and in the jurisdiction in which the Project is located.

By:_____
Title:_____
Date:_____

(Attach seal and Power of Attorney)

ACORD®

CERTIFICATE OF LIABILITY INSURANCE

DATE (MM/DD/YYYY)

THIS CERTIFICATE IS ISSUED AS A MATTER OF INFORMATION ONLY AND CONFERS NO RIGHTS UPON THE CERTIFICATE HOLDER. THIS CERTIFICATE DOES NOT AFFIRMATIVELY OR NEGATIVELY AMEND, EXTEND OR ALTER THE COVERAGE AFFORDED BY THE POLICIES BELOW. THIS CERTIFICATE OF INSURANCE DOES NOT CONSTITUTE A CONTRACT BETWEEN THE ISSUING INSURER(S), AUTHORIZED REPRESENTATIVE OR PRODUCER, AND THE CERTIFICATE HOLDER.

IMPORTANT: If the certificate holder is an ADDITIONAL INSURED, the policy(ies) must be endorsed. If SUBROGATION IS WAIVED, subject to the terms and conditions of the policy, certain policies may require an endorsement. A statement on this certificate does not confer rights to the certificate holder in lieu of such endorsement(s).

PRODUCER	CONTACT NAME:
AGENT NAME AND ADDRESS	PHONE (A/C, No, Ext): / FAX (A/C, No):
	E-MAIL ADDRESS:
	INSURER(S) AFFORDING COVERAGE / NAIC #
	INSURER A : ABC INSURANCE COMPANY
INSURED	INSURER B :
CONTRACTOR NAME AND ADDRESS	INSURER C :
	INSURER D :
	INSURER E :
	INSURER F :

COVERAGES **CERTIFICATE NUMBER:** **REVISION NUMBER:**

THIS IS TO CERTIFY THAT THE POLICIES OF INSURANCE LISTED BELOW HAVE BEEN ISSUED TO THE INSURED NAMED ABOVE FOR THE POLICY PERIOD INDICATED. NOTWITHSTANDING ANY REQUIREMENT, TERM OR CONDITION OF ANY CONTRACT OR OTHER DOCUMENT WITH RESPECT TO WHICH THIS CERTIFICATE MAY BE ISSUED OR MAY PERTAIN, THE INSURANCE AFFORDED BY THE POLICIES DESCRIBED HEREIN IS SUBJECT TO ALL THE TERMS, EXCLUSIONS AND CONDITIONS OF SUCH POLICIES. LIMITS SHOWN MAY HAVE BEEN REDUCED BY PAID CLAIMS.

INSR LTR	TYPE OF INSURANCE	ADDL INSR	SUBR WVD	POLICY NUMBER	POLICY EFF (MM/DD/YYYY)	POLICY EXP (MM/DD/YYYY)	LIMITS	
A	GENERAL LIABILITY ☑ COMMERCIAL GENERAL LIABILITY ☐ CLAIMS-MADE ☑ OCCUR GEN'L AGGREGATE LIMIT APPLIES PER: ☐ POLICY ☑ PRO-JECT ☐ LOC	Y	Y	POLICY NUMBER	1/1/2011	Current	EACH OCCURRENCE DAMAGE TO RENTED PREMISES (Ea occurrence) MED EXP (Any one person) PERSONAL & ADV INJURY GENERAL AGGREGATE PRODUCTS - COMP/OP AGG	$ 1,000,000 $ 50,000 $ 10,000 $ 1,000,000 $ 2,000,000 $ 2,000,000 $
A	AUTOMOBILE LIABILITY ☑ ANY AUTO ALL OWNED AUTOS ☐ SCHEDULED AUTOS ☑ HIRED AUTOS ☑ NON-OWNED AUTOS	Y	Y	POLICY NUMBER	1/1/2011	Current	COMBINED SINGLE LIMIT (Ea accident) BODILY INJURY (Per person) BODILY INJURY (Per accident) PROPERTY DAMAGE (Per accident)	$ 1,000,000 $ $ $ $
A	☑ UMBRELLA LIAB ☑ OCCUR EXCESS LIAB ☐ CLAIMS-MADE DED ☑ RETENTION $ 10,000	Y	Y	POLICY NUMBER	1/1/2011	Current	EACH OCCURRENCE AGGREGATE	$ 2,000,000 $ 2,000,000 $
A	WORKERS COMPENSATION AND EMPLOYERS' LIABILITY ANY PROPRIETOR/PARTNER/EXECUTIVE OFFICER/MEMBER EXCLUDED? Y/N N (Mandatory in NH) If yes, describe under DESCRIPTION OF OPERATIONS below	N/A	Y	POLICY NUMBER	1/1/2011	Current	☑ WC STATU-TORY LIMITS ☐ OTH-ER E.L. EACH ACCIDENT E.L. DISEASE - EA EMPLOYEE E.L. DISEASE - POLICY LIMIT	 $ 1,000,000 $ 1,000,000 $ 1,000,000
A	Leased/Rented/Equip. Owned Equipment Builders Risk/Installation Floater	N/A	Y	POLICY NUMBER	1/1/2011	Current	Limit; Deductible Limit; Deductible Limit; Deductible	

DESCRIPTION OF OPERATIONS / LOCATIONS / VEHICLES (Attach ACORD 101, Additional Remarks Schedule, if more space is required)

Project No. _____ [Title]. Certholder (City) and _____ (Design Professional) and any other entities named in 00800 SCs are named as primary, noncontributing Additional Insureds including products and completed operations, excluding workers compensation, employers liability and professional liability. Waiver of subrogation applies as allowed by law. [The policies required above shall contain no exclusions for work expressly within the subcontractors scope of work.]

CERTIFICATE HOLDER

City of Kansas City, Missouri

_____ [Department]

_____ [Address]

Kansas City, MO _____ [Zip]

CANCELLATION

SHOULD ANY OF THE ABOVE DESCRIBED POLICIES BE CANCELLED BEFORE THE EXPIRATION DATE THEREOF, NOTICE WILL BE DELIVERED IN ACCORDANCE WITH THE POLICY PROVISIONS.

AUTHORIZED REPRESENTATIVE

© 1988-2010 ACORD CORPORATION. All rights reserved.

The ACORD name and logo are registered marks of ACORD

SAMPLE

AUTHORIZATION TO RELEASE
A
REVENUE CLEARANCE LETTER

Revenue Division
414 East 12th Street, 2nd floor, Room 202 W
Kansas City, MO 64106 Phone (816) 513-1135 Fax (816) 513-1077 email: revenue@kcmo.org

I authorize the City of Kansas City, Missouri, Finance Department, Revenue Division, to release a Revenue Clearance Letter for:

Name of Taxpayer: _____Tax I.D.#_____
(PRINT)

Address: _____

Check this box and the City will send the Clearance Letter to you or the contractor designated.

☐ **I authorize the City to provide a copy of the Taxpayer's Revenue Clearance Letter to the following:**

NAME *(PRINT)*	**BUSINESS NAME**	**TITLE**
ADDRESS	**CITY, STATE, ZIP CODE**	
PHONE NUMBER	**FAX NUMBER**	**E-MAIL ADDRESS**

☐ **I authorize the City to provide the Taxpayer's Revenue Clearance Letter to all City Departments and to publish on the City's internet/intranet website that the Taxpayer is in compliance with the tax ordinances administered by the City's Commissioner of Revenue.**

Please send my 1st Revenue Clearance Letter to: _____
(Print Name of City Department/Contact Person/E-mail/Fax Number)

This authorization shall expire one (1) year from the date of the signature.

The City, Commissioner of Revenue and the Revenue Division personnel (hereinafter "the City"), are hereby held harmless from any and all liability relating to unauthorized disclosure of confidential tax information resulting from release of information under all applicable confidentiality laws including federal, state, or local including any damages sustained by wrongful transmission of confidential tax information to any other person.

UNDER PENALTIES OF PERJURY, I DECLARE THAT I HAVE EXAMINED THIS AUTHORIZATION, AND TO THE BEST OF MY KNOWLEDGE AND BELIEF, IT IS TRUE, CORRECT AND COMPLETE.

I hereby certify that I am the Taxpayer named herein or that I have the authority to execute this authorization and hold harmless agreement on behalf of the Taxpayer.

NAME *(PRINT)*	**TITLE** *(IF APPLICABLE)*	
SIGNATURE	**PHONE NUMBER**	**DATE**

A FACSIMILE OF THIS DOCUMENT SHALL CONSTITUTE AN ORIGINAL

KANSAS CITY
MISSOURI

Finance Department

Revenue Division

1118 Oak Street
Kansas City, MO 64106-2786

Phone: (816) 513-1120
Fax: (816) 513-1264
Email: revenue@kcmo.org
kcmo.gov/kctax

Letter Id: L1139040512
Date: 25-Oct-2017
Taxpayer Id: 1523670784

TEST TAXPAYER
414 E 12TH ST
KANSAS CITY MO 64106-2702

TAX CLEARANCE STATUS: APPROVED

As of this date, this notice is to inform you that TEST TAXPAYER is current with all taxes and license fees with the City of Kansas City, Mo., Finance Department/ Revenue Division.

Please note this could change if we perform a full review of your accounts in the future. We will let you know if we need to review your accounts. You will need to pay any amounts that are found due at that time.

Mari Ruck
Commissioner of Revenue

Visit kcmo.gov/quicktax to view the status of your account and for online filing.

OVERFLOW CONTROL PROGRAM CONSENT DECREE GENERAL CONDITIONS

TABLE OF CONTENTS

ARTICLE 1 DEFINITIONS AND TERMINOLOGY

1.01 Defined Terms
1.02 Terminology

ARTICLE 2 PRELIMINARY MATTERS

2.01 Delivery of Bonds
2.02 Affidavit of Compliance
2.03 Evidence of Insurance
2.04 Copies of Documents
2.05 Commencement of Contract Times; Notice to Proceed
2.06 Starting the Work
2.07 Before Starting Construction
2.08 Acceptable Schedules

ARTICLE 3 CONTRACT DOCUMENTS: INTENT, AMENDING, REUSE

3.01 Intent
3.02 Reference to Standards and Specifications of Technical Societies
3.03 Reporting and Resolving Discrepancies
3.04 Amending and Supplementing Contract Documents
3.05 Reuse of Documents

ARTICLE 4 AVAILABILITY OF LANDS; SUBSURFACE AND PHYSICAL CONDITIONS; REFERENCE POINTS

4.01 Availability of Lands
4.02 Subsurface and Physical Conditions
4.03 Differing Subsurface or Physical Conditions
4.04. Physical Conditions - Underground Facilities
4.05 Reference Points
4.06 Asbestos, Lead-Based Paint, PCBs, Petroleum, Hazardous Waste or Radioactive Material

ARTICLE 5 BONDS AND INSURANCE

5.01 Performance, Payment and Other Bonds
5.02 Licensed Sureties and Insurers
5.03 Certificates of Insurance
5.04 CONTRACTOR's Liability Insurance
5.05 CITY's Liability Insurance
5.06 Property Insurance
5.07 Waiver of Rights
5.08 Receipt and Application of Insurance Proceeds
5.09 Partial Utilization - Property Insurance

ARTICLE 6 CONTRACTOR'S RESPONSIBILITIES

6.01 Indemnification
6.02 Supervision and Superintendence
6.03 Services, Working Hours, Labor, Materials and Equipment
6.04 Progress Schedule
6.05 Recovery Schedules
6.06 Substitutes and "Or-Equal" Items
6.07 Concerning Subcontractors, Suppliers and Others
6.08 Patent Fees and Royalties
6.09 Permits
6.10 Compliance with Laws or Regulations
6.11 Taxes
6.12 Use of Site and Other Areas
6.13 Record Documents
6.14 Safety and Protection
6.15 Safety Representative
6.16 Hazard Communication Programs
6.17 Emergencies
6.18 Shop Drawings and Samples
6.19 Continuing the Work
6.20 CONTRACTOR's General Warranty and Guarantee

ARTICLE 7 OTHER WORK

7.01 Related Work at Site
7.02 Coordination

ARTICLE 8 CITY's RESPONSIBILITIES

8.01 Communications to CONTRACTOR
8.02 Replacement of DESIGN PROFESSIONAL
8.03 Furnish Data and Prompt Payment
8.04 Lands and Easements; Reports and Tests
8.05 Insurance
8.06 Change Orders
8.07 Inspections, Tests and Approvals
8.08 Limitations on CITY's Responsibilities
8.09 Undisclosed Hazardous Environmental Condition
8.10 Evidence of Financial Arrangements
8.11 CITY's Representative
8.12 Visits to Site

ARTICLE 9 DESIGN PROFESSIONAL's STATUS DURING CONSTRUCTION

9.01 General Scope of DESIGN PROFESSIONAL's Duties
9.02 Resident Project Representative
9.03 Clarifications and Interpretations
9.04 Rejecting Defective Work
9.05 Shop Drawings, Change Orders and Payments
9.06 Determinations for Unit Prices
9.07 Decisions on Requirements of Contract Documents and Acceptability of Work
9.08 Limitations on DESIGN PROFESSIONAL's Authority and Responsibilities

ARTICLE 10 CHANGES IN THE WORK

10.01 Authorized Changes in the Work
10.02 Unauthorized Changes in the Work
10.03 Signing of Change Orders
10.04 Notification to Surety

ARTICLE 11 CHANGE OF CONTRACT PRICE

11.01 Change of Contract Price
11.02 Cost of the Work
11.03 Cash Allowances
11.04 Unit Price Work
11.05 Dispute Resolution

ARTICLE 12 CONTRACT TIMES

12.01 Time of the Essence
12.02 Change of Contract Times
12.03 Proof Required To Justify An Extension of Time For Excusable and Compensable Delays
12.04 Delays Within CONTRACTOR's Control
12.05 Delays Beyond the CITY's and CONTRACTOR's Control
12.06 Delay Damages
12.07 Dispute Resolution

ARTICLE 13 TESTS AND INSPECTIONS; CORRECTION, REMOVAL OR ACCEPTANCE OF DEFECTIVE WORK

13.01 Access to Work
13.02 Tests and Inspections
13.03 Notice of Defects
13.04 Uncovering Work
13.05 CITY May Stop the Work
13.06 Correction or Removal of Defective Work
13.07 Correction Period
13.08 Acceptance of Defective Work
13.09 CITY May Correct Defective Work

ARTICLE 14 PAYMENTS TO CONTRACTOR AND COMPLETION

14.01 Schedule of Values
14.02 Application for Progress Payments
14.03 Contractor's Warranty of Title
14.04 Substantial Completion or Achievement of Full Operation
14.05 Partial Utilization
14.06 Final Inspection
14.07 Final Payment
14.08 Final Completion Delayed
14.09 Waiver of Claims
14.10 Completion of Work by City

ARTICLE 15 SUSPENSION OF WORK AND TERMINATION

15.01 CITY May Suspend Work
15.02 CITY May Terminate for Default
15.03 CITY May Terminate for Convenience

ARTICLE 16 CLAIMS AND DISPUTES

16.01 Definition
16.02 Written Notice and Burden of Proof
16.03 Time Limits on Claims
16.04 Continuing Contract Performance
16.05 Injury or Damage to Person or Property
16.06 Initial Resolution of Claims and Disputes
16.07 Final Resolution of Claims and Disputes

ARTICLE 17 MISCELLANEOUS

17.01 Giving Notice
17.02 Computation of Times
17.03 Cumulative Remedies
17.04 Survival of Obligations
17.05 Controlling Law

ARTICLE 1 DEFINITIONS AND TERMINOLOGY

1.01 Defined Terms

A. Wherever used in these General Conditions or in the other Contract Documents, the following terms have the meanings indicated which are applicable to both the singular and plural thereof:

1. **Achievement of Full Operation** – shall mean completion of construction and installation of equipment or infrastructure such that the equipment or infrastructure has been placed into full operation and is expected to both function and perform as designed.

2. **Addenda** – Written or graphic instruments issued prior to the opening of Bids that clarify, correct or change the Bidding Requirements or the Contract Documents.

3. **Agreement** – The written Contract between CITY and CONTRACTOR governing the Work to be performed; other Contract Documents are attached to the Agreement and made a part thereof as provided therein.

4. **Application for Payment** – The form accepted by CITY's Representative which is to be used by CONTRACTOR in requesting progress or final payments and which is to be accompanied by such supporting documentation as is required by the Contract Documents.

5. **Asbestos** – Any material that contains more than one percent (1%) Asbestos and is friable or is releasing Asbestos fibers into the air above current action levels established by the United States Occupational Safety and Health Administration.

6. **Bid** – The offer or proposal of the Bidder submitted on the Bid Form/Contract setting forth the prices for the Work to be performed. A Bidder's Bid becomes a Contract with CITY if the CITY executes the Bid Form/Contract submitted by Bidder. If the CITY executes the Bid Form/Contract submitted by Bidder, the term "Bidder" shall mean CONTRACTOR.

7. **Bidder** – One who submits a Bid directly to CITY, as distinct from a sub-bidder who submits a bid to a Bidder. If the CITY executes the Bid Form/Contract submitted by Bidder, the term "Bidder" shall mean CONTRACTOR in both the Bidding Documents and Contract Documents unless the context clearly indicates otherwise.

8. **Bidding Documents** – The advertisement or Invitation to Bid, Instructions to Bidders, the Bid Form/Contract, and the proposed Contract Documents (including all Addenda issued prior to receipt of Bids).

9. **Bidding Requirements** – The advertisement or invitation to bid, Instructions to Bidders, Bid security, and the Bid Form/Contract with any supplements.

10. **Bonds** – Payment Bond and Performance and Maintenance Bond and other instruments of security.

11. **Change Order** – A written document issued by CITY that authorizes an addition, deletion or revision in the Work, or an adjustment in the Contract Price or the Contract Times, issued on or after the Effective Date of the Contract.

12. **CITY/OWNER** – Kansas City, Missouri, a constitutionally chartered municipal corporation, with which CONTRACTOR has entered into the Contract and for whom the Work is to be provided**.**

13. **CITY's Representative** – Person or agency designated to act for the Director as provided in these Contract Documents.

14. **Consent Decree** – Shall mean Consent Decree, Civil No. 4:10-cv-0497-GAF.

15. **Consultant** – Person, firm or corporation having a contract with CITY or DESIGN PROFESSIONAL to furnish services as an independent professional associate or

Consultant with respect to the Project and who's identified as such in the Supplementary Conditions.

a. The Consultant(s) is identified, and their seals affixed on the Certification Page(s). The certifications describe the respective responsibilities for the Drawings and Specifications prepared by the Consultant(s) and are incorporated into this Contract.

16. Contract – The entire and integrated written agreement between CITY and CONTRACTOR concerning the Work that incorporates all Contract Documents. The Bid Form/Contract submitted by Bidder is the Contract between CITY and CONTRACTOR upon execution by CITY. The Contract supersedes prior negotiations, representations, or agreements, whether written or oral.

17. Contract Documents – The Contract Documents establish the rights and obligations of the parties and include the Contract, Addenda (which pertain to the Contract Documents), CONTRACTOR's Bid Form/Contract (including documentation accompanying the Bid and any post Bid documentation submitted prior to the Notice of Intent to Contract),, the HRD Construction Project Instructions, the Contractor's Utilization Plan/Request for Waiver, the Notice to Proceed, the Bonds, these General Conditions, the Supplementary Conditions, the Specifications and the Drawings as the same are more specifically identified in the Project Manual and the certification page(s) of the DESIGN PROFESSIONAL and Consultant(s), together with approved project baseline schedule and amendments thereto and all Written Amendments, Change Orders, Work Change Directives, and DESIGN PROFESSIONAL's written interpretations and clarifications issued on or after the Effective Date of the Contract, and approved Shop Drawings, and any certifications required as part of the Consent Decree. Reports and drawings of subsurface and physical conditions are not Contract Documents. Only printed or hard copies of the items listed in this Paragraph are Contract Documents. Files in electronic media format of text, data, graphics, and the like that may be furnished by CITY to CONTRACTOR are not Contract Documents, except project schedules submitted by CONTRACTOR and approved by CITY.

18. Contract Price – The money payable by CITY to CONTRACTOR for completion of the Work in accordance with the Contract Documents as stated in the Agreement.

19. Contract Times – The number of days or the dates stated in the Supplementary Conditions: (a) to achieve Substantial Completion and/or Achievement of Full Operation, and (b) to complete the Work so that it is ready for final payment as evidenced by CITY's Representative's written recommendation of final payment.

20. CONTRACTOR – The person, firm, partnership, company, corporation or association licensed or otherwise authorized by law to do business in Missouri, with whom CITY has entered into the Agreement.

21. Day or Days – The terms "day" or "days" as used herein shall mean a calendar day or calendar days. In computing any period of time under this Consent Decree, where the last day would fall on a Saturday, Sunday, federal or state holiday, the period shall run until the close of the next business day

22. DESIGN PROFESSIONAL – Architect, Engineer or other licensed professional who is either employed by or has contracted with CITY to serve in a design capacity and whose Consultants, members, partners, employees or agents have prepared and sealed the Drawings and Specifications.

The DESIGN PROFESSIONAL(s) is identified and their seals affixed on the Certification Page(s). The certifications describe the respective responsibilities for the Drawings and Specifications prepared by the DESIGN PROFESSIONAL and are incorporated into this Contract.

23. DESIGN PROFESSIONAL's Project Representative – The authorized representative of DESIGN PROFESSIONAL who may be assigned to the Site or any part thereof.

24. Director – The term Director shall mean the duly appointed executive officer of a department of City who is empowered by the City Charter or by the City Council to enter into a contract on behalf of City, or to grant a permit for improvements to land owned by City. A Director is authorized to delegate this authority to a City employee so designated in writing.

25. Drawings – The drawings which graphically show the scope, extent and character of the Work to be furnished and performed by CONTRACTOR and which have been prepared by DESIGN PROFESSIONAL and are included in the Contract Documents. Shop Drawings are not Drawings as so defined.

26. Effective Date of the Contract – The date indicated in the Contract on which it becomes effective, but if no such date is indicated it means the date on which the Contract is fully executed by CITY.

27. General Requirements – Sections of Division 1 of the Specifications. The General Requirements pertain to all sections of the Specifications.

28. Hazardous Environmental Condition – The presence at the Site of Asbestos, Lead-Based Paint, PCBs, Petroleum, Hazardous Waste, or Radioactive Material in such quantities or circumstances that may present a substantial danger to persons or property exposed thereto in connection with the Work.

29. Hazardous Waste – The term Hazardous Waste shall have the meaning provided in Section 1004 of the Solid Waste Disposal Act (42 USC Section 6903) as amended from time to time.

30. Laws or Regulations – Any and all applicable laws, rules, regulations, ordinances, codes and orders of any and all governmental bodies, agencies, authorities and courts having jurisdiction.

31. Lead-Based Paint – Any paint, varnish, stain, or other applied coating that has one (1) mg or more of lead per square centimeter. The terms "leaded paint" and "lead-containing paint" are synonymous with Lead-Based Paint.

32. Liens – Liens, charges, security interests or encumbrances upon real property or personal property.

33. Milestone – A principal event specified in the Contract Documents relating to an intermediate completion date or time prior to Achievement of Full Operation of all the Work.

34. Notice of Intent to Contract – The written notice by CITY to the apparent successful Bidder stating that upon compliance by that apparent successful Bidder with the conditions in the Bid Documents enumerated, within the time specified, and upon enactment of an appropriate ordinance or resolution, CITY will sign and deliver the Contract.

35. Notice to Proceed – A written notice given by CITY to CONTRACTOR fixing the date on which the Contract Times will commence to run and on which CONTRACTOR shall start to perform CONTRACTOR's obligations under the Contract Documents.

36. Overflow Control Plan or OCP – shall mean the Long Term Control Plan and Sanitary Sewer System Plan collectively referred to by the City as the Overflow Control Plan approved by the MDNR by letter dated April 14, 2010.

37. Partial Utilization – Use by CITY of a substantially completed part of the Work for the purpose for which it is intended (or a related purpose) prior to Substantial Completion/Achievement of Full Operation of all the Work.

38. PCBs – Polychlorinated biphenyls.

39. Petroleum – Petroleum, including crude oil or any fraction thereof which is liquid at standard conditions of temperature and pressure (60 degrees Fahrenheit and 14.7 pounds per square inch absolute), such as oil, petroleum, fuel oil, oil sludge, oil refuse, gasoline, kerosene, and oil mixed with other non-Hazardous Wastes and crude oils.

40. Project – The total construction of which the Work to be provided under the Contract Documents may be the whole, or a part as indicated elsewhere in the Contract Documents.

41. Project Manual – The documentary information prepared for bidding and constructing the Work. A listing of the contents of the Project Manual may be issued in one or more volumes and is contained in the table(s) of contents.

42. Radioactive Material – Source, special nuclear, or byproduct material as defined by the Atomic Energy Act of 1954 (42 USC Section 2011 et seq.) as amended from time to time.

43. Samples – Physical examples of materials, equipment, or workmanship that are representative of some portion of the Work and which establish the standards by which such portion of the Work will be judged.

44. Shop Drawings – All drawings, diagrams, illustrations, schedules and other data or information which are specifically prepared or assembled by or for CONTRACTOR and submitted by CONTRACTOR to illustrate some portion of the Work.

45. Site – Lands or areas indicated in the Contract Documents as being furnished by CITY upon which the Work is to be performed, including rights-of-way and easements for access thereto, and such other lands furnished by CITY which are designated for the use of CONTRACTOR.

46. Specifications – Those portions of the Contract Documents consisting of written technical descriptions of materials, equipment, construction systems, standards and workmanship as applied to the Work and certain administrative details applicable thereto.

47. Subcontractor – Any individual, firm, partnership, company, corporation or association licensed or otherwise authorized by law to do business in Missouri, to whom CONTRACTOR, with written notification to CITY, has entered into an agreement to perform a portion of the work.

48. *Substantial Completion*- When Work (or a specified part thereof) has progressed to the point where, in the opinion of CITY as evidenced by CITY's definitive certificate of Substantial Completion, it is sufficiently complete, in accordance with the Contract Documents, so that the Work (or specified part) can be utilized for the purposes for which it is intended. The terms "substantially complete" and "substantially completed" as applied to all or part of the Work refer to Substantial Completion thereof.

49. Supplementary Conditions - The part of the Contract Documents which amends and/or supplements these General Conditions.

50. Supplier – A manufacturer, fabricator, supplier, distributor, materialman or vendor having a direct contract with CONTRACTOR or with any Subcontractor to furnish materials or equipment to be incorporated into the Work by CONTRACTOR or any Subcontractor.

51. Underground Facilities – All pipelines, conduits, ducts, cables, wires, manholes, vaults, tanks, tunnels or other such facilities or attachments, and any encasements containing such facilities which have been installed underground to furnish any of the following services or materials: electricity, gases, steam, liquid petroleum products, telephone or other communications, cable television, water, wastewater, storm water, other liquids or chemicals, or traffic or other control systems.

52. Unpermitted CSO Discharge – shall include any release of untreated or partially treated sewage from the City's combined sewer system that is not authorized by any of the City's NPDES permits.

53. Unit Price Work – Work to be paid for on the basis of unit prices.

54. Work – The entire completed construction or the various separately identifiable parts thereof required to be furnished under the Contract Documents. Work includes and is the result of performing or furnishing labor and furnishing and incorporating material and equipment into the construction, and furnishing documents, all as required by the Contract Documents.

55. Work Change Directive – A written directive to CONTRACTOR, issued on or after the Effective Date of the Contract, signed by CITY and recommended by DESIGN PROFESSIONAL, ordering an addition, deletion or revision in the Work, or responding to differing or unforeseen subsurface or physical conditions under which the Work is to be performed, or to emergencies. A Work Change Directive will not change the Contract Price or the Contract Times but is evidence that the parties expect that the change directed or documented by a Work Change Directive will be incorporated in a subsequently issued Change Order following negotiations by the parties as to its effect, if any, on the Contract Price or Contract Times.

56. Written Amendment – A written statement modifying the Contract Documents, signed by CITY and CONTRACTOR on or after the Effective Date of the Contract and normally dealing with the non-engineering or non-technical rather than strictly construction-related aspects of the Contract Documents.

1.02 Terminology

A. Intent of Certain Terms or Adjectives

1. Whenever in the Contract Documents the terms “as ordered,” “as directed,” “as required,” “as allowed,” “as approved,” or terms of like effect or import are used, or the adjectives “reasonable,” “suitable,” “acceptable,” “proper” or “satisfactory” or adjectives of like effect or import are used to describe a requirement, direction, review or judgment of DESIGN PROFESSIONAL as to the Work, it is intended that such requirement, direction, review or judgment will be solely to evaluate, in general, the completed Work for compliance with the requirements of and information in the Contract Documents and conformance with the design concept of the completed Project as a functioning whole as shown or indicated in the Contract Documents (unless there is a specific statement indicating otherwise). The use of any such term or adjective shall not be effective to assign to DESIGN PROFESSIONAL any duty or authority to supervise or direct the furnishing or performance of the Work or any duty or authority to undertake responsibility contrary to the provisions of Paragraph 9.08 or any other provision of the Contract Documents.

B. Defective

1. The word “defective,” when modifying the word “Work,” refers to Work that is unsatisfactory, faulty or deficient, in that it does not conform to the Contract Documents, or does not meet the requirements of any inspection, reference standard, test or approval referred to in the Contract Documents, or has been damaged prior to CITY ’s Representative’s recommendation of final payment (unless responsibility for the protection thereof has been assumed by CITY at Achievement of Full Operation in accordance with Paragraph 14.04 or 14.05).

C. Furnish, Install, Perform, Provide

1. The word “furnish,” when used in connection with services, materials, or equipment, shall mean to supply and deliver said services, materials, or equipment to the Site (or some other specified location) ready for use or installation and in usable or operable condition.

2. The word “install,” when used in connection with services, materials, or equipment, shall mean to put into use or place in final position said services, materials, or equipment complete and ready for intended use.

3. The words “perform” or “provide,” when used in connection with services, materials, or equipment, shall mean to furnish and install said services, materials, or equipment complete and ready for intended use.

4. When “furnish,” “install,” “perform,” or “provide” is not used in connection with services, materials, or equipment in a context clearly requiring an obligation of CONTRACTOR, “provide” is implied.

D. Unless stated otherwise in the Contract Documents, words and phrases which have a well-known technical or construction industry or trade meanings are used in the Contract Documents in accordance with such recognized meaning.

ARTICLE 2 PRELIMINARY MATTERS

2.01 Delivery of Bonds

A. CONTRACTOR shall deliver to CITY such Bonds as CONTRACTOR may be required to furnish.

2.02 Affidavit of Compliance

A. CONTRACTOR shall deliver to CITY Affidavit of Compliance With the Federal Consent Decree Regarding the City of Kansas City, Missouri Overflow Control Plan (“OCP”) Civil Action No. 4:10-cv-0487-GAF

2.03 Evidence of Insurance

A. CONTRACTOR shall deliver to CITY certificates of insurance or other evidence of insurance that CITY may request, which CONTRACTOR is required to purchase and maintain in accordance with Article 5 or any other applicable provision in the Contract Documents.

2.04 Copies of Documents

A. CITY shall furnish to CONTRACTOR one (1) copy of the Drawings and Specifications, including addenda.

2.05 Commencement of Contract Times; Notice to Proceed

A. The Contract Times will commence to run on the date indicated in the Notice to Proceed.

2.06 Starting the Work

A. CONTRACTOR shall start to perform the Work on the date when the Contract Times commence to run, but no Work shall be done at the Site prior to the date on which the Contract Times commence to run, unless otherwise indicated in the Notice to Proceed.

2.07 Before Starting Construction

A. CONTRACTOR's Review of Contract Documents: Before undertaking each part of the Work, CONTRACTOR shall carefully study and compare the Contract Documents and check and verify pertinent figures shown thereon and all applicable field measurements. CONTRACTOR shall promptly report in writing to DESIGN PROFESSIONAL any conflict, error, ambiguity or discrepancy which CONTRACTOR may discover and shall obtain a written interpretation or clarification from DESIGN PROFESSIONAL before proceeding with any Work affected thereby. CONTRACTOR shall not be liable to CITY or DESIGN PROFESSIONAL for failure to report any conflict, error, ambiguity or discrepancy in the Contract Documents, unless CONTRACTOR knew or reasonably should have known thereof.

B. Preliminary Schedules: Within ten (10) days after the Effective Date of the Contract, or on such later date as CITY's Representative shall provide in writing, CONTRACTOR shall submit to CITY's Representative for review:

1. Preliminary Project Schedule: CONTRACTOR shall submit a proposed project schedule for CITY's acceptance. The proposed project schedule shall include a detailed and comprehensive construction schedule utilizing a critical path method diagram network that (a) shows all major procurement and construction elements and phases of the Project; (b) breaks down each element or phase by trade; (c) shows early and late starts so that all float time will be accurately identified; (d) all other activities necessary for the timely completion of the Project in accordance with the scheduled dates for Achievement of Full Operation; and (e) highlights the project's critical path. CITY's acceptance is expressly limited to CITY's acknowledgement that, based upon CITY's limited review, the dates of Achievement of Full Operation and Milestone dates are acceptable. After final acceptance of the preliminary project schedule by the CITY, it shall be considered the project baseline schedule pursuant to Paragraph 2.07(B).

2. Preliminary schedule of Shop Drawings and Sample submittals which will list each required submittal and the times for submitting, reviewing and processing such submittal; and

3. Preliminary 01290.02 Schedule of Values for all of the Work which will include quantities and prices of items which when added together equals the Contract Price and will subdivide the Work into component parts in sufficient detail to serve as the basis for progress payments during performance of the Work. Such prices will include an appropriate amount of overhead and profit applicable to each item of Work.

C. Preconstruction Conference: Before any Work at the Site may be started, a conference attended by CONTRACTOR, DESIGN PROFESSIONAL and others, as appropriate, will be scheduled by CITY's Representative to establish a working understanding among the parties as to the Work and to discuss the schedules referred to in Paragraph 2.06 B, procedures for handling Shop Drawings and other submittals, processing Applications for Payment, maintaining required records, Claims process, dispute resolution, OCP requirements, or any other applicable provisions of the Contract Documents.

2.08 Acceptable Schedules

A. Acceptable schedule: If necessary following the Preconstruction Conference, The Contractor shall update and submit to the CITY for review a revised preliminary schedule within seven (7) Calendar Days after the Notice to Proceed.

1. The CITY shall review and make any necessary comments and/or adjustments to the revised preliminary schedule. The Contractor shall incorporate the CITY's comments and resubmit the revised preliminary schedule within seven (7) Calendar Days from receipt of the CITY's comments.

B. Project Baseline Schedule: The accepted revised preliminary schedule shall be considered the project baseline schedule and shall be used by the CONTRACTOR for planning, scheduling, managing, and executing the Work. **The project baseline schedule shall not be changed without the written consent of CITY. Failure of the CONTRACTOR to provide the CITY with an acceptable preliminary schedule shall be cause for the CITY to suspend work and shall be considered an inexcusable delay to the Project.** The project baseline schedule may be further modified by the Supplemental Conditions.

C. CONTRACTOR's schedule of values will be acceptable to CITY's Representative as to form and substance if it provides a reasonable allocation of the Contract Price to component parts of the Work.

ARTICLE 3 CONTRACT DOCUMENTS: INTENT, AMENDING, REUSE

3.01 Intent

A. The Contract Documents comprise the entire Contract between CITY and CONTRACTOR concerning the Work.

B. It is the intent of the Contract Documents to describe a functionally complete Project (or part thereof) to be constructed in accordance with the Contract Documents. Any Work, materials or equipment that may reasonably be inferred from the Contract Documents or from prevailing custom or trade usage as being required to produce the intended result will be furnished and performed whether or not specifically called for at no additional cost to CITY. Clarifications and interpretations of the Contract Documents shall be issued by DESIGN PROFESSIONAL as provided in Paragraph 9.03.

C. Correlation and intent of documents: The Drawings and Specifications are intended to supplement each other. Any Work shown on the Drawings and not mentioned in the Specifications (or vice versa) shall be as binding and shall be completed the same as if mentioned or shown on both. In the event of conflicts or discrepancies among the Contract Documents, interpretations will be based on the following priorities:

1. Change Orders and Written Amendments
2. Project Baseline Schedule Requirements
3. Approved Shop Drawings
4. Addenda, with those of later date having precedence over those of earlier date
5. The Supplementary Conditions
6. The General Conditions
7. Drawings and Specifications

D. If Drawings are in conflict, larger scale details shall govern over smaller or no-scale Drawings. If Specification sections are in conflict with each other, the conflict shall be resolved by DESIGN PROFESSIONAL in accordance with reasonable interpretation of such documents.

E. The general character of the detailed Work is shown on the Drawings, but minor modifications may be made in the full size or scale details. Where the word “similar” occurs on the Drawings, it shall be used in its general sense and not as meaning identical, and all details shall be worked out in relation to their location and their connection to the other parts of the Work. Where on any Drawings a portion of the Work is drawn out and the remainder is indicated in outline, the parts drawn out shall apply also to all other like portions of the Work. Where ornaments or other details are indicated by starting only, such details shall be continued throughout the courses or parts in which they occur and shall also apply to all other similar parts in the Work, unless otherwise indicated.

3.02 Reference to Standards and Specifications of Technical Societies

A. Reference to standards, specifications, manuals or codes of any technical society, organization or association, or to Laws or Regulations, whether such reference be specific or by implication, shall mean the latest standard, specification, manual, code or Laws or Regulations in effect at the time of opening of Bids (or on the date of CONTRACTOR’s proposal if there are no Bids), except as may be otherwise specifically stated in the Contract Documents.

1. No provision of any such standard, specification, manual, code or instruction of Supplier shall be effective to change the duties or responsibilities of CITY, CONTRACTOR or DESIGN PROFESSIONAL, or any of their Subcontractors, Consultants, agents, or employees from those set forth in the Contract Documents, nor shall it be effective to assign to CITY or DESIGN PROFESSIONAL or any of their Consultants, agents or employees any duty or

authority to supervise or direct the furnishing or performance of the Work or any duty or authority to undertake responsibility inconsistent with the provisions of the Contract Documents.

3.03 Reporting and Resolving Discrepancies

A. Reporting Discrepancies: If, during the performance of the Work, CONTRACTOR discovers any conflict, error, ambiguity or discrepancy within the Contract Documents or between the Contract Documents and any provision of any Laws or Regulations applicable to the performance of the Work or of any standard, specification, manual, code or any instruction of any Supplier referred to in Paragraph 6.07, CONTRACTOR shall report it immediately to DESIGN PROFESSIONAL in writing. CONTRACTOR shall not proceed with the Work affected thereby (except in an emergency as authorized by Paragraph 6.17) until an amendment or supplement to the Contract Documents has been issued by one of the methods indicated in Paragraph 3.04; provided, however, that CONTRACTOR shall not be liable to CITY or DESIGN PROFESSIONAL for failure to report any such conflict, error, ambiguity or discrepancy unless CONTRACTOR knew or reasonably should have known thereof.

B. Resolving Discrepancies. The provisions of the Contract Documents shall take precedence in resolving any conflict, error, ambiguity or discrepancy between the provisions of the Contract Documents and:

1. the provisions of any standard, specification, manual, code or instruction (whether or not specifically incorporated by reference in the Contract Documents); or

2. the provisions of any Laws or Regulations applicable to the performance of the Work.

3.04 Amending and Supplementing Contract Documents

A. The Contract Documents may be amended to provide for additions, deletions and revisions in the Work or to modify the terms and conditions thereof in one or more of the following ways:

1. a Written Amendment or

2. a Change Order (pursuant to Article 10), whether pursuant to a Work Change Directive or otherwise.

B. The requirements of the Contract Documents may be supplemented and minor variations and deviations in the Work may be authorized, in one or more of the following ways:

1. DESIGN PROFESSIONAL's approval of a Shop Drawing or Sample (pursuant to Paragraph 6.18), or

2. DESIGN PROFESSIONAL's written interpretation or clarification (pursuant to Paragraph 9.03).

3.05 Reuse of Documents

A. CONTRACTOR and any Subcontractor or Supplier or other person or organization performing or furnishing any of the Work under this Contract:

1. shall not have or acquire any title to or ownership rights in any of the Drawings, Specifications or other documents (or copies of any thereof) prepared by or bearing the seal of DESIGN PROFESSIONAL or Consultant, and

2. shall not reuse any of such Drawings, Specifications, other documents or copies thereof on extensions of the Project or any other project without written consent of CITY, and of DESIGN PROFESSIONAL or Consultant, as applicable, and specific written verification or adaptation by DESIGN PROFESSIONAL or Consultant.

This prohibition will survive final payment, completion, and acceptance of the Work, or

termination or completion of the Contract. Nothing herein shall preclude CONTRACTOR from retaining copies of the Contract Documents for record purposes.

ARTICLE 4 AVAILABILITY OF LANDS; SUBSURFACE AND PHYSICAL CONDITIONS; REFERENCE POINTS

4.01 Availability of Lands

A. CITY shall furnish the Site. CITY shall identify any encumbrances or restrictions not of general application but specifically related to use of lands so furnished with which CONTRACTOR will have to comply in performing the Work. Easements for permanent structures or permanent changes in existing facilities will be obtained and paid for by CITY, unless otherwise provided in the Contract Documents. If CONTRACTOR and CITY are unable to agree on entitlement to or the amount or extent of any adjustments in the Contract Price or the Contract Times or both as a result of any delay in CITY's furnishing these lands, rights-of-way or easements, CONTRACTOR may make a Claim as provided in Article 16. CONTRACTOR shall provide for all additional lands and access thereto that may be required for temporary construction facilities or storage of materials and equipment.

4.02 Subsurface and Physical Conditions

A. Reports and Drawings: Reference is made to the Supplementary Conditions for identification of:

1. Subsurface Conditions: Those reports of explorations and tests of subsurface conditions at or contiguous to the Site that have been utilized by DESIGN PROFESSIONAL in preparing the Contract Documents; and

2. Physical Conditions: Those drawings of physical conditions in or relating to existing surface or subsurface structures at or contiguous to the Site (except Underground Facilities) that have been utilized by DESIGN PROFESSIONAL in preparing the Contract Documents.

B. Limited Reliance by CONTRACTOR on Technical Data Authorized: CONTRACTOR may rely upon the general accuracy of the technical data contained in reports and drawings of subsurface or physical conditions, but such reports and drawings are not Contract Documents. The technical data is identified in the Supplementary Conditions. Except for reliance on such technical data, CONTRACTOR may not rely upon or make any Claim against CITY, DESIGN PROFESSIONAL or any Consultant with respect to:

1. the completeness of such reports and drawings for CONTRACTOR's purposes, including, but not limited to, any aspects of the means, methods, techniques, sequences and procedures of construction to be employed by CONTRACTOR and safety precautions and programs incident thereto; or

2. other data, interpretations, opinions and information contained in such reports or shown or indicated in such drawings, or

3. any CONTRACTOR interpretation of or conclusion drawn from any technical data or any such other data, interpretations, opinions or information.

4.03 Differing Subsurface or Physical Conditions

A. Notice of Differing Subsurface or Physical Conditions. If CONTRACTOR believes that any subsurface or physical condition at or contiguous to the Site that is uncovered or revealed either:

1. is of such a nature as to establish that any technical data on which CONTRACTOR is entitled to rely as provided in Paragraphs 4.02 A and 4.02 B is materially inaccurate; or

2. is of such a nature as to require a change in the Contract Documents; or

3. differs materially from that shown or indicated in the Contract Documents; or

4. is of an unusual nature, and differs materially from conditions ordinarily encountered and generally recognized as inherent in work of the character provided for in the Contract Documents;

then CONTRACTOR shall, promptly after becoming aware thereof and before further disturbing the subsurface or physical conditions or performing any Work in connection therewith (except in an emergency as required by Paragraph 6.17), notify CITY and DESIGN PROFESSIONAL in writing about such condition(s). CONTRACTOR shall not further disturb such conditions or perform any Work in connection therewith (except as aforesaid) until receipt of written order to do so.

B. DESIGN PROFESSIONAL's Review: After receipt of notice as required by Paragraph 4.03 A, DESIGN PROFESSIONAL will promptly review the pertinent conditions, determine the necessity for CITY to obtain additional exploration or tests with respect thereto and notify CITY in writing (with a copy to CONTRACTOR) of DESIGN PROFESSIONAL's findings and conclusions.

C. Possible Contract Documents Change: If CITY concludes that a change in the Contract Documents is required as a result of a condition that meets one or more of the categories in Paragraph 4.03 A, a Work Change Directive or a Change Order will be issued as provided in Article 10 to reflect and document the consequences of such change.

D. Possible Price or Times Adjustments: An equitable adjustment in the Contract Price or in the Contract Times, or both, will be allowed to the extent that the existence of a subsurface or physical condition causes an increase or decrease in CONTRACTOR's cost of, or time required for, performance of the Work; subject, however, to the following:

1. the condition must meet any one or more of the categories described in Paragraphs 4.03 A.1 through 4.03 A.4, inclusive;

2. a change in the Contract Documents pursuant to Paragraph 4.03 C will not be an automatic authorization of, nor a condition precedent to, entitlement to any such adjustments;

3. with respect to Work that is paid for on a unit price basis, any adjustment in Contract Price will be subject to the provisions of Paragraphs 9.06 and 11.04; and

4. CONTRACTOR shall not be entitled to any adjustment in the Contract Price or Contract Times if;

a. CONTRACTOR knew, or by the exercise of ordinary care could have known, of such conditions at the time CONTRACTOR made a final commitment to CITY with respect to Contract Price and Contract Times by the submission of a Bid; or

b. the existence of such condition could reasonably have been discovered or revealed as a result of any examination, investigation, exploration, test or study of the Site and contiguous areas required by the Bidding Requirements or Contract Documents to be conducted by or for CONTRACTOR prior to CONTRACTOR's making such final commitment; or

c. CONTRACTOR failed to give the written notice as required by Paragraph 4.03 A.

E. If CITY and CONTRACTOR are unable to agree on entitlement to, or magnitude of, an equitable adjustment in the Contract Price pursuant to Article 11 and/or Contract Times pursuant to Article 12, a Claim may be made therefore as provided in Article 16. However, CITY, DESIGN PROFESSIONAL and Consultants shall not be liable to CONTRACTOR for any costs, losses or damages (including but not limited to all fees and charges of engineers, architects, attorneys, and other professionals and all other dispute resolution costs) sustained by CONTRACTOR on or in connection with any other project or anticipated project.

4.04. Physical Conditions - Underground Facilities

A. Shown or Indicated: The information and data shown or indicated in the Contract Documents with respect to existing Underground Facilities at or contiguous to the Site is based on information and data furnished to CITY or DESIGN PROFESSIONAL by the owners of such Underground Facilities or by others.

1. CITY and DESIGN PROFESSIONAL shall not be responsible for the accuracy or completeness of any such information or data; and

2. The cost of all of the following will be included in the Contract Price and CONTRACTOR shall have full responsibility for:

a. reviewing and checking all such information and data,

b. locating all Underground Facilities shown or indicated in the Contract Documents,

c. coordination of the Work with the owners of such Underground Facilities during construction, and

d. the safety and protection of all such Underground Facilities as provided in Paragraph 6.14 and repairing any damage thereto resulting from the Work.

B. Not Shown or Indicated: If an Underground Facility is uncovered or revealed at or contiguous to the Site, and was not shown or indicated in the Contract Documents, or was shown or indicated incorrectly in the Contract Documents, CONTRACTOR shall, promptly after becoming aware thereof and before further disturbing conditions affected thereby or performing any Work in connection therewith (except in an emergency as required by Paragraph 6.17), identify the owner of such Underground Facility and give written notice to that owner and to CITY and DESIGN PROFESSIONAL.

C. DESIGN PROFESSIONAL's Review: After receipt of notice as required by Paragraph 4.04 B, DESIGN PROFESSIONAL will promptly review the consequences of the existence of the Underground Facility and notify CITY in writing (with a copy to CONTRACTOR) of DESIGN PROFESSIONAL's findings and conclusions.

D. Possible Contract Documents Change: If CITY concludes that a change in the Contract Documents is required as a result of the existence of an Underground Facility that either was not shown, or was shown incorrectly, in the Contract Documents, a Work Change Directive or Change Order will be issued as provided in Article 10 to reflect and document the consequences of such change.

E. Possible Price or Times Adjustments: An equitable adjustment in the Contract Price or in the Contract Times, or both, will be allowed to the extent that the existence of the Underground Facility causes an increase or decrease in CONTRACTOR's cost of, or time required for, performance of the Work; subject, however, to the following:

1. a change in the Contract documents pursuant to Paragraph 4.04 D will not be an automatic authorization of, nor a condition precedent to, entitlement to any such adjustments;

2. with respect to Work that is paid for on a unit price basis, any adjustment in Contract Price will be subject to the provisions of Paragraphs 9.06 and 11.04; and

3. CONTRACTOR shall not be entitled to any adjustment in the Contract Price or Contract Times if;

a. CONTRACTOR knew, or by the exercise of ordinary care could have known, of the existence of the Underground Facility at the time CONTRACTOR made a final commitment to CITY with respect to Contract Price and Contract Times by the submission of a Bid; or

b. the existence of the Underground Facility could reasonably have been discovered or revealed as a result of any examination, investigation, exploration, test or study of the

Site and contiguous areas required by the Bidding Requirements or Contract Documents to be conducted by or for CONTRACTOR prior to CONTRACTOR's making such final commitment; or

c. CONTRACTOR failed to give the written notice as required by Paragraph 4.04 B.

F. If CITY and CONTRACTOR are unable to agree on entitlement to, or magnitude of, an equitable adjustment in the Contract Price pursuant to Article 11 and/or Contract Times pursuant Article 12, a Claim may be made therefore as provided in Article 16. However, CITY, DESIGN PROFESSIONAL and Consultants shall not be liable to CONTRACTOR for any costs, losses or damages (including but not limited to all fees and charges of engineers, architects, attorneys, and other professionals and all other dispute resolution costs) sustained by CONTRACTOR on or in connection with any other project or anticipated project.

4.05 Reference Points

A. CITY shall provide engineering surveys to establish reference points for construction that in DESIGN PROFESSIONAL's judgment are necessary to enable CONTRACTOR to proceed with the Work. CONTRACTOR shall be responsible for laying out the Work, shall protect and preserve the established reference points and property monuments, and shall make no changes or relocations without the prior written approval of CITY. CONTRACTOR shall report to DESIGN PROFESSIONAL whenever any reference point or property monument is lost or destroyed or requires relocation because of necessary changes in grades or locations, and shall be responsible for the accurate replacement or relocation of such reference points or property monuments by professionally qualified personnel.

4.06 Asbestos, Lead-Based Paint, PCBs, Petroleum, Hazardous Waste or Radioactive Material

A. Reports and Drawings: Reference is made to the Supplementary Conditions for the identification of those reports and drawings relating to a Hazardous Environmental Condition identified at the Site, if any, that have been utilized by the DESIGN PROFESSIONAL in the preparation of the Contract Documents.

B. Limited Reliance by CONTRACTOR on Technical Data Authorized: CONTRACTOR may rely upon the general accuracy of the technical data contained in reports and drawings relating to a Hazardous Environmental Condition at the Site, but such reports and drawings are not Contract Documents. Such technical data is identified in the Supplementary Conditions. Except for such reliance on such technical data, CONTRACTOR may not rely upon or make any Claim against CITY, DESIGN PROFESSIONAL or any Consultant with respect to:

1. the completeness of such reports and drawings for CONTRACTOR's purposes, including, but not limited to, any aspects of the means, methods, techniques, sequences and procedures of construction to be employed by CONTRACTOR and safety precautions and programs incident thereto; or

2. other data, interpretations, opinions and information contained in such reports or shown or indicated in such drawings; or

3. any CONTRACTOR interpretation of or conclusion drawn from any technical data or any such other data, interpretations, opinions or information.

C. CONTRACTOR shall not be responsible for any Hazardous Environmental Condition uncovered or revealed at the Site which was not shown or indicated in Drawings or Specifications or identified in the Contract Documents to be within the scope of the Work. CONTRACTOR shall be responsible for all Hazardous Environmental Conditions created with any materials brought to the Site by CONTRACTOR, Subcontractors, Suppliers, or anyone else for whom CONTRACTOR is responsible. CONTRACTOR shall not be entitled to an extension of the Contract Times or an increase in the Contract Price if CONTRACTOR, Subcontractor, Supplier or anyone for whom

CONTRACTOR is responsible created any Hazardous Environmental Condition at the Site or in connection with the Work.

D. If CONTRACTOR encounters a Hazardous Environmental Condition at the Site or if CONTRACTOR or anyone for whom CONTRACTOR is responsible creates a Hazardous Environmental Condition at the Site, CONTRACTOR shall immediately:

1. secure or otherwise isolate such condition;

2. stop all Work in connection with such condition and in any area affected thereby (except in an emergency as required by Paragraph 6. 15); and

3. notify CITY and DESIGN PROFESSIONAL (and promptly thereafter confirm such notice in writing). CITY shall promptly consult with DESIGN PROFESSIONAL concerning the necessity for CITY to retain a qualified expert to evaluate such condition or take corrective action, if any.

E. CONTRACTOR shall neither resume Work nor be required to resume Work in connection with such condition or in any affected area until after CITY has obtained any required permits related thereto and delivered to CONTRACTOR written notice:

1. specifying that such condition and any affected area is or has been rendered safe for the resumption of Work; or

2. specifying any special conditions under which such Work may be resumed safely. If CITY and CONTRACTOR cannot agree as to entitlement to or on the amount or extent, if any, of any adjustment in Contract Price pursuant to Article 11and/or Contract Times to pursuant to Article 12 as a result of such Work stoppage or such special conditions under which Work is agreed to be resumed by CONTRACTOR, a Claim may be made therefore as provided in Article 16.

F. If after receipt of written notice as required in Paragraph 4.06 E, CONTRACTOR does not agree to resume Work based on a reasonable belief it is unsafe or does not agree to resume such Work under special conditions specified in the notice, then CITY may order the portion of the Work that is in the area affected by such condition to be deleted from the Work. If CITY and CONTRACTOR cannot agree as to entitlement to or magnitude of an equitable adjustment in Contract Price pursuant to Article 11and/or Contract Times pursuant to Article 12 as a result of deleting such portion of the Work, then a Claim may be made therefore as provided in Article 16. CITY may have such deleted portion of the Work performed by CITY's own forces or others in accordance with Article 7.

G. The provisions of Paragraphs 4.02, 4.03, and 4.04 are not intended to apply to a Hazardous Environmental Condition uncovered or revealed at the Site.

H. All materials used, whether new or salvaged, shall be asbestos-free materials. CONTRACTOR shall immediately call to the attention of the CITY's Representative any specified material or product which the CONTRACTOR knows or suspects to contain asbestos, whether new or salvaged.

ARTICLE 5 BONDS AND INSURANCE

5.01 Performance, Payment and Other Bonds

A. CONTRACTOR shall furnish Performance and Maintenance and Payment Bonds, each in an amount at least equal to the Contract Price, as set out in the Contract Documents, as security for the faithful performance and payment of all CONTRACTOR's obligations under the Contract Documents. These Bonds shall remain in effect at least until one (1) year after the date when final payment of the Contract becomes due, except as provided otherwise by Laws or Regulations

or by the Contract Documents. CONTRACTOR shall also furnish such other Bonds as are required by the Supplementary Conditions.

B. All Bonds shall be in the form prescribed by the Contract Documents except as provided otherwise by Laws or Regulations. A certified copy of the agent's authority to act must accompany all Bonds signed by an agent.

C. If the surety on any Bond furnished by CONTRACTOR is declared bankrupt or becomes insolvent, or its right to do business is terminated in any state where any part of the Project is located or it ceases to meet the requirement of Paragraph 5.01 B, CONTRACTOR shall within twenty (20) days thereafter substitute another Bond and surety, both of which must be acceptable to CITY.

5.02 Licensed Sureties and Insurers

A. All Bonds and insurance required by the Contract Documents to be purchased and maintained by CITY or CONTRACTOR shall be obtained from surety or insurance companies that are duly licensed in the State of Missouri and in the jurisdiction in which the Project is located, if not in Missouri, to issue Bonds or insurance policies for the limits and coverages so required. All surety and insurance companies shall hold an A.M. Best rating of B+, V, or better.

5.03 Certificates of Insurance

A. CONTRACTOR shall deliver to CITY and DESIGN PROFESSIONAL, prior to the start of any Work at the Project Site, properly completed certificates of insurance or other evidence that the required insurance is in full force and effect, in a form acceptable to CITY. The receipt or acceptance of a certificate of insurance that does not incorporate the required terms and coverage shall not constitute a waiver by the City of the insurance requirements contained in the Contract Documents.

B. All policies of insurance (and the certificates or other evidence thereof) required to be purchased and maintained by CONTRACTOR in accordance with Paragraphs 5.04 and 5.06 will contain a provision or endorsement that the coverage afforded will not be canceled or changed or renewal refused until at least thirty (30) days prior written notice has been given to CITY and CONTRACTOR and to each other additional insured to whom a certificate of insurance has been issued and will contain waiver provisions in accordance with Paragraph 5.07 A - The certificates of insurance will contain a provision stating that should any of the policies described in the certificate be cancelled before the expiration date thereof, notice will be delivered in accordance with the policy provisions.

C. ***If the coverage afforded is cancelled or changed or its renewal is refused, CONTRACTOR shall give at least thirty (30) days prior written notice to CITY and to each other additional insured to whom a certificate of insurance*** has ***been issued.***

5.04 CONTRACTOR's Liability Insurance

A. CONTRACTOR shall purchase and maintain such liability and other insurance as is appropriate for the Work being performed and furnished, and will provide protection from claims set forth below which may arise out of or result from CONTRACTOR's performance and furnishing of the Work and CONTRACTOR's other obligations under the Contract Documents, whether it is to be performed or furnished by CONTRACTOR, any Subcontractor or Supplier, or by anyone directly or indirectly employed by any of them to perform or furnish any of the Work, or by anyone for whose acts any of them may be liable:

1. claims under workers' compensation, disability benefits and other similar employee benefit acts;

2. claims for damages because of bodily injury, occupational sickness or disease, or death of CONTRACTOR's employees;

3. claims for damages because of bodily injury, sickness or disease, or death of any person other than CONTRACTOR's employees;

4. claims for damages insured by customary personal injury liability coverage;

5. claims for damages, other than to the Work itself, because of injury to or destruction of tangible property wherever located, including loss of use resulting therefore; and

6. claims for damages because of bodily injury or death of any person or property damage arising out of the ownership, maintenance or use of any motor vehicle.

B. The policies of insurance so required by Paragraph 5.04 A, to be purchased and maintained shall:

1. with respect to insurance required by Paragraphs 5.04 A.3 through 5.04 A.5 inclusive, include as additional insureds (subject to any customary exclusion for professional liability) CITY, DESIGN PROFESSIONAL, Consultants and any other individuals or entities identified in the Supplementary Conditions to be listed as additional insureds, and include coverage for the respective officers, directors, partners, employees, agents, and other consultants and subcontractors of each and any of all such additional insureds, and the insurance afforded to these additional insureds shall provide primary coverage for all claims covered thereby;

2. include at least the specific coverages and be written for not less than the limits of liability provided in Paragraph 5.04 C or required by Laws or Regulations, whichever is greater;

3. include completed operations insurance;

4. include contractual liability insurance covering CONTRACTOR's indemnity obligations;

5. contain a provision or endorsement that the coverage afforded will not be canceled, changed or renewal refused until at least thirty (30) days prior written notice has been given to CITY, CONTRACTOR and to each other additional insured identified in the Supplementary Conditions to whom a certificate of insurance has been issued (and the certificates of insurance furnished by the CONTRACTOR pursuant to Paragraph 5.03 will so provide);

6. remain in effect at least until final payment and at all times thereafter when CONTRACTOR may be correcting, removing or replacing defective Work in accordance with Paragraphs 13.06 and 13.07;

7. with respect to completed operations insurance, and any insurance coverage written on a claims-made basis, remain in effect for at least two (2) years after final payment (and CONTRACTOR shall furnish CITY and each other additional insured identified in the Supplementary Conditions to whom a certificate of insurance has been issued evidence satisfactory to CITY and any such additional insured of continuation of such insurance);

8. contain a cross-liability or severability of interest clause or endorsement. Insurance covering the specified additional insureds shall be primary insurance, and all other insurance carried by the additional insureds shall be excess insurance;

9. with respect to commercial automobile liability, commercial general liability, and umbrella liability insurance, CONTRACTOR shall require its insurance carrier(s) to waive all rights of subrogation against CITY, and CITY's officers, directors, partners, employees and agents; and

10. contain a provision or endorsement that the costs of providing the insureds a defense and appeal, including attorneys fees, as insureds, shall be supplementary and shall not be included as part of the policy limits but shall remain the insurer's responsibility.

C. Specific policies of insurance required by this Paragraph 5.04 shall include:

1. Workers' Compensation and Employers' Liability Insurance. This insurance shall protect CONTRACTOR against all claims under applicable state workers' compensation laws, including coverage as necessary for the benefits provided under the United States Longshoremen's and Harbor Workers' Act and the Jones Act. CONTRACTOR shall also be protected against claims for injury, disease, or death of employees which, for any reason, may not fall within the provisions of workers' compensation laws. This policy shall include an "all states" or "other states" endorsement. The liability limits shall be not less than:

Workers' Compensation: Statutory

Employers' liability: $1,000,000 each occurrence

2. Commercial Automobile Liability Insurance. This insurance shall be occurrence type written in comprehensive form and shall protect CONTRACTOR, and CITY, DESIGN PROFESSIONAL and Consultants against all claims for injuries to members of the public and damage to property of others arising from the use of motor vehicles, either on or off the Project Site, whether they are owned, non-owned, or hired.

The liability limits shall be not less than: $2,000,000

3. Commercial General Liability Insurance. This insurance shall be occurrence type written in comprehensive form acceptable to CITY. This insurance shall protect CONTRACTOR, and CITY, DESIGN PROFESSIONAL and Consultants as additional insureds, against claims arising from injuries, sickness, disease, or death of any person or damage to property arising out of performance of the Work. The policy shall also include coverage for personal injury liability; contractual liability; completed operations and products liability; and for blasting, explosion, and collapse of buildings; and damage to underground property. The liability limits for bodily injury and property damage shall be not less than:

$2,000,000 combined single limit for each occurrence

$2,000,000 general aggregate.

4. The insurer's costs of providing the insureds a defense and appeal as additional insureds, including attorney's fees, shall be supplementary and shall not be included as part of the policy limits but shall remain the insurer's separate responsibility.

5.05 CITY's Liability Insurance

A. In addition to the insurance required to be provided by CONTRACTOR under Paragraph 5.04, CITY, at CITY's option, may purchase and maintain at CITY's expense liability insurance that will protect CITY against claims which may arise from operations under the Contract Documents.

5.06 Property Insurance

A. Unless otherwise provided in the Supplementary Conditions, CONTRACTOR shall purchase and maintain property insurance on the Work at the Site in the amount of the full replacement cost thereof (subject to such deductible amounts as may be provided in the Supplementary Conditions or required by Laws or Regulations). This insurance shall:

1. include the interests of CITY, CONTRACTOR, Subcontractors, and any other persons or entities identified in the Supplementary Conditions, each of whom is deemed to have an insurable interest and shall be listed as an insured or additional insured;

2. be written on a Builder's Risk "all-risk" or open peril or special causes of loss policy form that shall at least include insurance for physical loss or damage to the Work, temporary buildings, falsework and materials and equipment in transit, and shall insure against at least the following perils or causes of loss: fire, lightning, extended coverage, theft, vandalism and malicious mischief, earthquake, tornado, collapse, debris removal, demolition occasioned by

enforcement of Laws or Regulations, water damage, damage caused by frost and freezing, and acts of God;

3. be maintained in effect until final payment is made unless otherwise agreed to in writing by CITY with thirty (30) days written notice to each other additional insured to whom a certificate of insurance has been issued.

B. CITY shall not be responsible for purchasing and maintaining any property insurance to protect the interests of CONTRACTOR, Subcontractors or others involved in the Work to the extent of any deductible amounts. The risk of loss within the deductible amounts will be borne by CONTRACTOR, Subcontractor or others suffering any such loss and if any of them wishes property insurance coverage within the limits of such amounts, each may purchase and maintain it at the purchaser's own expense.

5.07 Waiver of Rights

A. CITY and CONTRACTOR intend that all policies purchased in accordance with Paragraphs 5.04 and 5.06 will protect CITY, CONTRACTOR, DESIGN PROFESSIONAL Consultants, Subcontractors, and all other persons or entities identified in the Supplementary Conditions to be listed as insureds or additional insureds in such policies and will provide primary coverage for all losses and damages caused by the perils covered thereby. All such policies shall contain provisions to the effect that in the event of payment of any loss or damage the insurers will have no rights of recovery against any of the insureds or additional insureds thereunder. CITY and CONTRACTOR waive all rights against each other and their respective officers, directors, partners, employees and agents for all losses and damages caused by, arising out of or resulting from any of the perils covered by such policies and any other property insurance applicable to the Work, but only to the extent of insurance coverage; and, in addition, waive all such rights against DESIGN PROFESSIONAL, Consultants, Subcontractors, and all other persons or entities identified in the Supplementary Conditions to be listed as insureds or additional insureds (and the officers, directors, partners, employees, agents, and other consultants and subcontractors of any and each of them) under such policies for losses and damages so caused and covered by insurance. None of the above waivers shall extend to the rights that any party making such waiver may have to the proceeds of insurance held by CITY as trustee or otherwise payable under any policy so issued. None of the above waivers shall apply if specifically in conflict with Laws and Regulations.

5.08 Receipt and Application of Insurance Proceeds

A. Any insured loss under the property insurance will be adjusted with CITY and made payable to CITY as fiduciary for the insureds, as their interests may appear, subject to the requirements of any indentures of indebtedness entered into by CITY.

B. CITY as fiduciary shall have power to adjust and settle any loss with the insurers unless one of the parties in interest shall object to CITY's exercise of this power in writing within fifteen (15) days after the occurrence of loss. If such objection is made, CITY as fiduciary shall make settlement with the insurers in accordance with such agreement as the parties in interest may reach. If no such agreement among the parties in interest is reached, CITY as fiduciary shall adjust and settle the loss with the insurers.

5.09 Partial Utilization - Property Insurance

A. If CITY finds it necessary to occupy or use a portion or portions of the Work prior to Achievement of Full Operation of all the Work, such use or occupancy may be accomplished in accordance with Paragraph 14.05; provided that no such use or occupancy shall commence before the insurers providing the property insurance have acknowledged notice thereof and in writing effected any changes in coverage necessitated thereby. The insurers providing the property insurance shall consent by endorsement on the policy or policies, but the property

insurance shall not be canceled or permitted to lapse on account of any such partial use or occupancy.

ARTICLE 6 CONTRACTOR'S RESPONSIBILITIES

6.01 Indemnification

A. For purposes of this Paragraph 6.01 only, the following terms shall have the meanings listed:

1. Claims means all claims, damages, liability, losses, costs and expenses, including court costs and reasonable attorneys' fees, including attorney's fees incurred by the City in the enforcement of this indemnity obligation.

2. CONTRACTOR'S Agents means CONTRACTOR's officers, employees, sub-consultants, subcontractors, successors, assigns, invitees, and other agents.

3. CITY means CITY, its Program Manager/Construction Advisor and any of their agents, officials, officers, employees and program managers or construction advisors.

B. CONTRACTOR's obligations under this Paragraph with respect to indemnification for acts or omissions, including negligence, of CITY, shall be limited to the coverage and limits of insurance that CONTRACTOR is required to procure and maintain under this Contract. CONTRACTOR affirms that it has had the opportunity to recover the costs of the liability insurance required in this Contract in its contract price.

C. CONTRACTOR shall defend, indemnify and hold harmless CITY from and against all Claims arising out of or resulting from all acts or omissions in connection with this Contract caused in whole or in part by CONTRACTOR or CONTRACTOR's Agents, regardless of whether or not caused in part by any act or omission, including negligence, of OWNER.

D. In any and all Claims against CITY, DESIGN PROFESSIONAL, CONSULTANT, or any of their respective agents, officers, directors or employees by any employee (or the survivor or personal representative of such employee) of CONTRACTOR, any Subcontractor, any Supplier, any person or organization directly or indirectly employed by any of them to perform or furnish any of the Work, or anyone for whose acts any of them may be liable, the indemnification obligation under Paragraph 6.01 C shall not be limited in any way by any limitation on the amount or type of damages, compensation or benefits payable by or for CONTRACTOR or any such Subcontractor, Supplier or other person or organization under workers' compensation acts, disability benefit acts or other employee benefit acts.

E. The indemnification obligations of CONTRACTOR under Paragraph 6.01 C shall not extend to liability arising out of, resulting from, or caused by the professional negligence, errors or omissions of DESIGN PROFESSIONAL, CONSULTANT, or any of their respective agents, officers, directors or employees.

6.02 Supervision and Superintendence

A. CONTRACTOR shall supervise, inspect and direct the Work competently and efficiently, devoting such attention thereto and applying such skills and expertise as may be necessary to perform the Work in accordance with the Contract Documents. CONTRACTOR shall be solely responsible for the means, methods, techniques, sequences and procedures of construction, but CONTRACTOR shall not be responsible for the negligence of others in the design or specification of a specific means, method, technique, sequence or procedure of construction which is shown or indicated in and expressly required by the Contract Documents. CONTRACTOR shall be responsible to see that the completed Work complies accurately with the Contract Documents.

B. At all times during the progress of the Work, CONTRACTOR shall assign a competent resident superintendent of the Work, who shall not be replaced without written request to and

approval by CITY except under extraordinary circumstances. The superintendent will be CONTRACTOR's representative at the Site and shall have authority to act on behalf of CONTRACTOR. All communications given to or received from the superintendent shall be binding on CONTRACTOR.

C. If it is determined to be in the best interest of the Work, CONTRACTOR shall replace the project manager, resident superintendent or any other employee of the CONTRACTOR, Subcontractors, Suppliers or other persons or organizations performing or furnishing any of the Work on the project upon written request by the CITY.

6.03 Services, Working Hours, Labor, Materials and Equipment

A. CONTRACTOR shall provide competent, suitably qualified personnel to survey, lay out and construct or perform the Work as required by the Contract Documents. CONTRACTOR shall at all times maintain good discipline and order at the Site. Except as otherwise required for the safety or protection of persons or the Work or property at the Site or adjacent thereto, and except as otherwise indicated in the Contract Documents, all Work at the Site shall be performed during regular working hours. CONTRACTOR shall not permit overtime work or the performance of Work on Saturday, Sunday or any legal holiday without CITY's written consent given after prior written notice to DESIGN PROFESSIONAL.

B. Unless otherwise specified in Division 1, General Requirements, CONTRACTOR shall furnish and assume full responsibility for all services, materials, equipment, labor, transportation, construction equipment and machinery, tools, appliances, fuel, power, light, heat, telephone, water, sanitary facilities, temporary facilities and all other facilities and incidentals necessary for the furnishing, performance, testing, start-up and completion of the Work.

C. All materials and equipment shall be of good quality and new, except as otherwise provided in the Contract Documents. All warranties and guarantees specifically called for by the Specifications shall expressly run to the benefit of CITY. If required by DESIGN PROFESSIONAL, CONTRACTOR shall furnish satisfactory evidence (including reports of required tests) as to the source, kind, and quality of materials and equipment. All materials and equipment shall be stored, applied, installed, connected, erected, used, cleaned and conditioned in accordance with instructions of the applicable Supplier, except as otherwise provided in the Contract Documents.

D. It is the policy of the CITY that any manufactured goods or commodities used or supplied in the performance of this Contract and any subcontract hereto shall be manufactured or produced in the United States whenever possible.

6.04 Progress Schedule

A. CONTRACTOR shall adhere to the progress schedule established in accordance with Article 2 as it may be adjusted from time to time as provided below:

1. **CONTRACTOR shall provide, at least once every thirty (30) calendar days, updated information on the project schedule**, including thirty (30) day look ahead schedules, projected variances per event category and per Subcontractor, identification of all variances and calculation of the number of Days difference between the as-built critical path and the project schedule critical path

2. **CONTRACTOR shall, with each application for payment, provide completed monthly updated status report for the previous month on the project schedule and updated information indicating as-built and as-planned conditions**. The updated information on the project schedule shall not modify any Milestone dates in the project schedule that CITY has previously approved. **The updated information required is a condition precedent to payment pursuant to paragraph 14.02 and shall include at a minimum:**

a. a concise statement of the outlook for meeting project schedule dates and the reasons for any change in outlook from the previous report;

b. a review of any significant technical problems encountered during the month;

c. an explanation of any corrective action taken or proposed; and

d. a summary of any Claims anticipated by CONTRACTOR with respect to the Work, including the anticipated costs and schedule impacts of any such Claims.

6.05 Recovery Schedules

A. If the CONTRACTOR should:

1. fail, refuse or neglect to supply a sufficient number of workers or to deliver the materials or equipment with such promptness as to prevent the delay in the progress of the Work;

2. fail in any respect to commence and diligently prosecute the Work in accordance with the approved baseline project schedule in order to complete Achievement of Full Operation;

3. fail to commence, prosecute, finish, deliver or install the different portions of the Work on time as specified in the approved baseline project schedule; or

4. fail in the performance of any of the material covenants of the Contract Documents;

CITY shall have the right to direct the CONTRACTOR to prepare a written recovery plan, for CITY's approval, to accelerate the Work in order to conform to the approved baseline project schedule, including, without limitation, providing additional labor or expediting delivery of materials, performing overtime or re-sequencing the Work without adjustments to the Contract value. Upon CITY's approval of the recovery plan, CONTRACTOR shall accelerate the Work in accordance with the plan.

B. Proposed recovery schedules shall be submitted to the City within three (3) calendar days of demand as a separate project plan for review and approval by CITY prior to incorporation into the approved baseline schedule. The recovery schedule shall be submitted in a format compatible with the baseline schedule format. Each proposed revision shall be submitted as a separate schedule, with the following minimum requirements:

1. A critical path method diagram showing revised and affected activities or Milestones.

2. An activity report for all revised and affected activities or Milestones.

C. Upon acceptance of the recovery schedule by CITY, data shall be added or revised for all new or revised activities and incorporated into the approved baseline project schedule.

6.06 Substitutes and "Or-Equal" Items

A. Materials or equipment: Whenever an item of material or equipment is specified or described in the Contract Documents by using the name of a proprietary item or the name of a particular Supplier, the specification or description is intended to establish the type, function, appearance and quality required. Unless the specification or description contains, or is followed by, words reading that no like, equivalent or "or-equal" item or no substitution is permitted, other items of material or equipment or material or equipment of other Suppliers may be submitted to CITY for review by CITY's Representative under the following circumstances:

1. "Or-Equal": If, prior to receipt of Bids, Bidder proposes an item of material or equipment as functionally equal to that named and sufficiently similar so that no change in related Work will be required, CITY's Representative may request DESIGN PROFESSIONAL to consider it as an "or-equal" item. DESIGN PROFESSIONAL will review and recommend the acceptance, or rejection, of the proposed item to the CITY's Representative. For the purposes of this Paragraph, a proposed item of material or equipment will be considered functionally equal to an item so named if:

a. in the exercise of reasonable judgment DESIGN PROFESSIONAL determines that:

(1) it is at least equal in quality, durability, appearance, strength, and design characteristics; and

(2) it will reliably perform at least equally well the function imposed by the design concept of the completed Project as a functioning whole; and

b. Bidder certifies that:

(1) there is no increase in cost to the CITY; and

(2) it will conform substantially, even with deviations, to the detailed requirements of the item named in the Contract Documents.

If the CITY's Representative approves the proposed item, it may be accepted by CITY.

2. Substitute Items: If CONTRACTOR proposes an item of material or equipment as a substitute item, then CONTRACTOR shall submit sufficient information as provided below to allow CITY's Representative to determine that the item of material or equipment proposed is essentially equivalent to that named and an acceptable substitute therefore. The procedure for review by the CITY's Representative will include the following as supplemented in the General Requirements and as CITY's Representative may determine is appropriate under the circumstances:

a. Requests for review of proposed substitute items of material or equipment will not be accepted by CITY's Representative from anyone other than CONTRACTOR.

b. If CONTRACTOR wishes to furnish or use a substitute item of material or equipment, CONTRACTOR shall first make written application to CITY's Representative for acceptance thereof.

c. In the application, CONTRACTOR shall certify that the proposed substitute will perform adequately the functions and achieve the results called for by the general design, be similar in substance to that specified and be suited to the same use as that specified. The application will state the extent, if any, to which the evaluation and acceptance of the proposed substitute will impact CONTRACTOR's achievement of Achievement of Full Operation, whether or not acceptance of the substitute for use in the Work will require a change in any of the Contract Documents (or in the provisions of any other direct contract with CITY for work on the Project) to adapt the design to the proposed substitute and whether or not incorporation or use of the substitute in connection with the Work is subject to payment of any license fee or royalty.

d. All variations of the proposed substitute from that specified will be identified in the application and available maintenance, repair and replacement service will be indicated. The application will also contain an itemized estimate of all costs or credits that will result directly or indirectly from acceptance of such substitute, including costs of redesign and claims of other contractors affected by the resulting change, all of which will be considered by CITY's Representative in evaluating the proposed substitute. CITY's Representative may require CONTRACTOR to furnish additional data about the proposed substitute.

If the CITY's Representative approves the proposed item, CITY may accept it.

B. Substitute Construction Methods or Procedures: If a specific means, method, technique, sequence or procedure of construction is shown or indicated in and expressly required by the Contract Documents, CONTRACTOR may furnish or utilize a substitute means, method, technique, sequence or procedure of construction acceptable to DESIGN PROFESSIONAL. CONTRACTOR shall notify CITY and submit sufficient information to allow DESIGN PROFESSIONAL, in DESIGN PROFESSIONAL's sole discretion, to determine that the substitute proposed is equivalent to that expressly called for by the Contract Documents.

C. Expenses: Bidder shall provide all data in support of any “or equal” at Bidder’s expense, and CONTRACTOR shall provide all data in support of any proposed substitute at CONTRACTOR’s expense.

D. Evaluation: DESIGN PROFESSIONAL and CITY’s Representative will be allowed a reasonable time within which to evaluate each proposal or submittal made pursuant to Paragraphs 6.06 A, and 6.06 B. CITY will be the sole judge of acceptability. No “or-equal””or substitute will be ordered, installed or utilized without CITY’s prior written acceptance which will be evidenced by either a Change Order or an approved Shop Drawing. CITY may require CONTRACTOR to furnish at CONTRACTOR’s expense, a special performance guarantee or other surety with respect to any “or-equal’ substitute. DESIGN PROFESSIONAL will record time required by DESIGN PROFESSIONAL and Consultants in evaluating substitutes proposed or submitted by CONTRACTOR pursuant to Paragraphs 6.06 A and 6.06 B and in making changes in the Contract Documents (or in the provisions of any other direct contract with CITY for work on the Project) occasioned thereby. Whether or not CITY accepts a substitute so proposed or submitted by CONTRACTOR, CONTRACTOR shall reimburse CITY for the reasonable charges of DESIGN PROFESSIONAL and Consultants for evaluating each such proposed substitute.

6.07 Concerning Subcontractors, Suppliers and Others

A. CONTRACTOR shall not employ any Subcontractor, Supplier or other person or organization (including those acceptable to CITY as indicated in Paragraph 6.07 B), whether initially or as a substitute, against whom CITY has a reasonable objection, including but not limited to debarment by City or another governmental entity or decertification of the Subcontractor from the City’s Minority and Women’s Business Enterprise Program as a result of the Subcontractor’s failure to comply with any of the requirements of the provisions of Chapter 3 of the City’s Code as determined by the Director of the Human Relations Department. Contractor shall insert this provision in any subcontractor agreement associated with this Contract. CONTRACTOR shall not be required to employ any Subcontractor, Supplier or other person or organization to furnish or perform any of the Work against whom CONTRACTOR has reasonable objection. CONTRACTOR shall submit required information for all Subcontractors on Form 01290.09 - Subcontractor and Major Material Suppliers List, provided in these Contract Documents, prior to Subcontractor beginning Work at the Site.

B. The Supplementary Conditions require the identity of certain Subcontractors, Suppliers or other persons or organizations (including those who are to furnish the principal items of materials or equipment) to be submitted to CITY on or before the date specified in the Supplementary Conditions, for acceptance by CITY. I f CONTRACTOR has submitted a list thereof in accordance with the Supplementary Conditions, CITY may accept (either in writing or by failing to make written objection thereto by the date indicated for acceptance or objection in the Contract Documents) any such Subcontractor, Supplier or other person or organization so identified, or may reject same on the basis of reasonable objection after due investigation, in which case CONTRACTOR shall submit an acceptable replacement for the rejected Subcontractor, Supplier or other person or organization. The Contract Price will be adjusted by the difference in the cost occasioned by such substitution, and an appropriate Change Order will be issued or Written Amendment signed. No acceptance by CITY of any such Subcontractor, Supplier or other person or organization shall constitute a waiver of any right of CITY or DESIGN PROFESSIONAL to reject defective Work.

C. CONTRACTOR shall be fully responsible to CITY for all acts and omissions of the Subcontractors, Suppliers and other persons and organizations performing or furnishing any of the Work under a direct or indirect contract with CONTRACTOR just as CONTRACTOR is responsible for CONTRACTOR’s own acts and omissions. Nothing in the Contract Documents shall create for the benefit of any such Subcontractor, Supplier or other person or organization any contractual relationship between CITY or DESIGN PROFESSIONAL and any such Subcontractor, Supplier or other person or organization, nor shall it create any obligation on the part of CITY or DESIGN PROFESSIONAL to pay or to see to the payment of any moneys due

any such Subcontractor, Supplier or other person or organization except as may otherwise be required by Laws or Regulations.

D. CONTRACTOR shall be solely responsible for scheduling and coordinating the Work of Subcontractors, Suppliers and other persons and organizations performing or furnishing any of the Work under a direct or indirect contract with CONTRACTOR.

E. CONTRACTOR shall require all Subcontractors, Suppliers and such other persons and organizations performing or furnishing any of the Work to communicate with CITY and DESIGN PROFESSIONAL through CONTRACTOR.

F. The divisions and sections of the Specifications and the identifications of any Drawings shall not control CONTRACTOR in dividing the Work among Subcontractors or Suppliers or delineating the Work to be performed by any specific trade.

G. All Work performed for CONTRACTOR by a Subcontractor or Supplier shall be pursuant to an appropriate written agreement between CONTRACTOR and the Subcontractor or Supplier that specifically binds the Subcontractor or Supplier to the applicable terms and conditions of the Contract Documents for the benefit of CITY. Whenever any such agreement is with a Subcontractor or Supplier who is listed as an additional insured on the property insurance provided in Paragraph 5.06, the agreement between the CONTRACTOR and the Subcontractor or Supplier will contain provisions whereby the Subcontractor or Supplier waives all rights against CITY, CONTRACTOR, DESIGN PROFESSIONAL, Consultants and all other additional insureds for all losses and damages caused by, arising out of or resulting from any perils, to the extent covered by such policies and any other property insurance applicable to the Work. If the insurers on any such policies require separate waiver forms to be signed by any Subcontractor or Supplier, CONTRACTOR will obtain the same.

H. Except as otherwise provided in this subsection H and in accordance with the provisions of subsection C hereof, the agreement between CONTRACTOR and the Subcontractor or Supplier referred to in subsection G, shall provide that the CONTRACTOR and the Subcontractor or Supplier agree not to request CITY or CITY's Representative to intervene in or facilitate the resolution of claims or contract disputes arising out of or related to the agreement between CONTRACTOR and the Subcontractor or Supplier. Furthermore, the Contracts between CONTRACTOR and Subcontractors or Suppliers shall provide that all unresolved claims and disputes between CONTRACTOR and the Subcontractor or Supplier that remain unresolved after thirty (30) calendar days from the notice of claim, shall be subject to mediation as a condition precedent to the institution of legal proceedings by either party. Any such mediation shall be conducted in accordance with the CITY's Code Section 3-467.

I. CONTRACTOR shall not insert any provision in any subcontract or agreement associated with this Contract that explicitly states or implies that the subcontractor or supplier shall only be paid for work performed if or when the general CONTRACTOR is paid by the CITY. Contractor's compliance with this provision is a material term of this Contract.

J. CONTRACTORS shall not deny any Subcontractor subcontracting opportunities solely because the Subcontractor is not a signatory to collective bargaining agreements with organized labor.

6.08 Patent Fees and Royalties

A. CONTRACTOR shall pay all license fees and royalties and assume all costs incident to the use in the performance of the Work or the incorporation into the Work of any invention, design, process, product or device which is the subject of patent rights or copyrights held by others. If a particular invention, design, process, product or device is specified in the Contract Documents for use in the performance of the Work, and if to the actual knowledge of CITY or DESIGN PROFESSIONAL its use is subject to patent rights or copyrights calling for the payment of any license fee or royalty to others, the existence of such rights shall be disclosed by CITY in the Contract Documents. To the fullest extent permitted by Laws or Regulations, CONTRACTOR

shall defend, indemnify and hold harmless CITY, DESIGN PROFESSIONAL, Consultants and the officers, directors, employees, agents and other consultants of each and any of them from and against all claims, costs, losses and damages (including but not limited to all fees and charges of engineers, architects, attorneys, and other professionals and all court or arbitration or other dispute resolution costs) arising out of or resulting from any infringement of patent rights or copyrights incident to the use in the performance of the Work or resulting from the incorporation into the Work of any invention, design, process, product or device not specified in the Contract Documents.

6.09 Permits

A. Unless otherwise provided in the Supplementary Conditions, CONTRACTOR shall obtain and pay for all construction permits and licenses. CITY shall assist CONTRACTOR, when necessary, in obtaining such permits and licenses. CONTRACTOR shall pay all governmental charges and inspection fees necessary for the prosecution of the Work, which are applicable at the time of opening of Bids, or, if there are no Bids, on the Effective Date of the Contract. CONTRACTOR shall pay all charges of utility owners for connections to the Work, and CITY shall pay all charges of such utility owners for capital costs related thereto, such as plant investment fees.

B. CONTRACTOR, at its own expense, shall comply with all Federal, State and local laws and regulations, including, but not limited to the Missouri Clean Water Law (Chapter 644 RSMo) together with any accompanying regulation(s) contained in the Missouri Code of State Regulations (CSR Title 10), as well as any implementing permits, together with any CITY Provisions during the life of this Contract including but not limited to:

a. Approvals and permits as required for construction or land disturbance activities.

b. Compliance with the State of Missouri – Department of Natural Resources ("MDNR") Missouri State Operating Permit ("Land Disturbance Permit"), MO-R100006 for all construction or land disturbance activity.

c. Development and implementation of a Storm Water Pollution Prevention Plan (SWPPP).

(1) Contractor shall not commence land disturbance activity until the initial SWPPP has been finalized.

(2) Preparation and submittal of all applications, documentation and exhibits required to obtain MDNR approvals for uninterrupted Work at the Site.

(3) Amending/Updating SWPPP.

(4) Site Inspections and submittal of Inspection Reports

(5) Proper Operation and Maintenance to achieve compliance with the terms of the Permit.

(6) Maintenance of required records in accordance with MDNR requirements and requirements included in Article 6 of these Contract Documents.

d. In addition to requirements of Article 6, Contractor shall also provide record access to Missouri Department of Natural Resources (MDNR).

e. Failure to control erosion and water pollution is a permit violation. CONTRACTOR shall have 24 hours after receiving notice of the violation to correct the problem. If the CONTRACTOR fails to correct the problem after the time prescribed, the City will hire a remediation expert to fix the problem. In such an event, the CONTRACTOR shall be liable to the City for the remediation costs plus a 10% mark-up of the total contract price. If the CONTRACTOR receives three (3) notices of violation of the erosion control plan and the City's MS4 permit, the Director may issue a stop work order and delay any payment until

control measures are properly functioning and stream damage has been mitigated. In such an event, any delay to the project schedule will result in liquidated damages assessed against the CONTRACTOR.

6.10 Compliance with Laws and Regulations

A. CONTRACTOR shall give all notices and comply with all Laws or Regulations applicable to furnishing and performing the Work. Except where otherwise expressly required by applicable Laws or Regulations, neither CITY nor DESIGN PROFESSIONAL shall be responsible for monitoring CONTRACTOR's compliance with any Laws or Regulations. The Laws or Regulations included in this Paragraph shall include, but not be limited to, those set forth in the Supplementary Conditions.

B. Failure to Comply. If CONTRACTOR performs any Work in violation of applicable Laws, Regulations, or stipulations of the Consent Decree, CONTRACTOR shall bear all claims, costs, losses and damages (including but not limited to all fees and charges of engineers, architects, attorneys, and other professionals and all court or arbitration or other dispute resolution costs) caused by, arising out of or resulting therefrom; however, it shall not be CONTRACTOR's primary responsibility to make certain that the Specifications and Drawings are in accordance with Laws or Regulations, but this shall not relieve CONTRACTOR of CONTRACTOR's obligations under Paragraph 3.03.

C. Conflicts of Interest. The provisions of City's Code Sections 2-1015 and 3-301, prohibiting City officers and employees from having a financial or personal interest in any contract with City, and Code Sections 3-307 and 3-309, imposing sanctions for violations, shall apply to this Contract. CONTRACTOR certifies that no officer or employee of City has, or will have, a direct or indirect financial or personal interest in this Contract, and that no officer or employee of City, or member of such officer's or employee's immediate family, either has negotiated, or has or will have an arrangement concerning employment to perform services on behalf of CONTRACTOR on this Contract.

D. Licenses and Permits. CONTRACTOR, at its own expense, shall secure or cause to be secured all licenses and permits from public or private sources necessary for the fulfillment of its obligations under this Contract. All references in this Contract to the "Code" shall mean City's Code of Ordinances, including any amendments thereto or re-codification thereof unless the context clearly indicates otherwise. CONTRACTOR shall obtain copies of all necessary licenses and permits from Subcontractors required for the Work before Subcontractors begin Work at the Site. CONTRACTOR shall retain such evidence in its files and make available to CITY within ten (10) days after CITY's written request.

E. Americans with Disabilities Act. CONTRACTOR agrees to comply, during the course of this Contract, with all provisions of the Americans with Disabilities Act, 42 U.S.C. Sec. 12101 et seq., as well as 28 CFR Parts 35 and 36 and 29 CFR Part 1630, as applicable and as amended from time to time.

F. Affirmative Action. If the Contract Price exceeds $300,000.00 and CONTRACTOR employs fifty (50) or more people, CONTRACTOR shall comply with City's Affirmative Action requirements in accordance with the provisions of Chapter 3 of City's Code, the rules and regulations relating to those sections, and any additions or amendments thereto. CONTRACTOR shall not discriminate against any employee or applicant for employment because of race, color, sex, religion, national origin or ancestry, disability, sexual orientation, gender identity or age in a manner prohibited by Chapter 3 of City's Code.

CONTRACTOR shall:

1. Submit, in print or electronic format, a copy of CONTRACTOR'S current certificate of compliance to the City's Human Relations Department (HRD) prior to receiving the first payment under the contract, unless a copy has already been submitted to HRD at any point within the previous two calendar years. If, and only if, CONTRACTOR does not possess a

current certification of compliance, CONTRACTOR shall submit, in print or electronic format, a copy of its affirmative action program to HRD prior to receiving the first payment under the contract, unless a copy has already been submitted to HRD at any point within the previous two calendar years.

2. Require any Subcontractor awarded a subcontract exceeding $300,000.00 to affirm that Subcontractor has an affirmative action program in place and will maintain the affirmative action program in place for the duration of the subcontract.

3. Obtain from any Subcontractor awarded a subcontract exceeding $300,000.00 a copy of the Subcontractor's current certificate of compliance and tender a copy of the same, in print or electronic format, to HRD within thirty (30) days from the date the subcontract is executed. If, and only if, Subcontractor does not possess a current certificate of compliance, CONTRACTOR shall obtain a copy of the Subcontractor's affirmative action program and tender a copy of the same, in print or electronic format, to HRD within thirty (30) days from the date the subcontract is executed.

City has the right to take action as directed by City's Human Relations Department to enforce this provision. If CONTRACTOR fails, refuses or neglects to comply with the provisions of Chapter 3 of City's Code, then such failure shall be deemed a total breach of this Contract and this Contract may be terminated, canceled or suspended, in whole or in part, and CONTRACTOR may be declared ineligible for any further contracts funded by City for a period of one (1) year. This is a material term of this Contract.

G. Minority and Women Business Enterprises and Workforce. City is committed to ensuring that minorities and women participate to the maximum extent possible in the performance of City's construction contracts. If minority and women business enterprise (M/WBE) goals have been set for this Contract, CONTRACTOR agrees to comply with all requirements of City's Minority and Women's Business Enterprise Program as enacted in City's Code, Sections 3-421 through 3-469 and as hereinafter amended. CONTRACTOR shall meet or exceed both the MBE and WBE goals set forth in its Contractor Utilization Plan/Request for Waiver. If workforce utilization goals are applicable to this Contract, CONTRACTOR agrees to comply with all requirements of City's Construction Employment Program as enacted in City's Code, Sections 3-501 through 3-525 and as hereinafter amended. CONTRACTOR shall meet or exceed the construction employment goals unless the same shall have been waived in the manner provided by law. CONTRACTOR's compliance with this provision is a material part of this Contract.

H. Records.

1. For purposes of this section:

(a) "City" shall mean the City Auditor, the City's Internal Auditor, the City's Director of Human Relations, the City Manager, the City department administering this Contract and their delegates and agents.

(b) "Record" shall mean any document, book, paper, photograph, map, sound recordings or other material, regardless of physical form or characteristics, made or received in connection with this Contract and all Contract amendments and renewals.

2. Contractor shall maintain and retain all Records for a term of five (5) years that shall begin after the expiration or termination of this Contract and all Contract amendments. City shall have a right to examine or audit all Records and Contractor shall provide access to City of all records upon ten (10) days written notice from the City.

3. The United States, and its representatives, including attorneys, contractors, and consultants, shall have the right of entry into any facility covered by the Consent Decree at all reasonable times, upon presentation of credentials, to: (1) monitor the progress of activities required under the Consent Decree; (2) verify any data or information submitted to the United States and/or MDNR in accordance with the terms of the Consent Decree; (3) obtain samples and, upon request, splits of any samples taken by the City or its representatives, contractors,

or consultants; (4) obtain documentary evidence, including photographs and similar data; and (5) assess the City's compliance with this Consent Decree.

I. Prevailing Wage.

1. CONTRACTOR shall comply and require its Subcontractors to comply with;

a. sections 290.210 to 290.340, RSMO the State of Missouri Prevailing Wage Law (the "Law"); and

b. 8 CSR 30-3.010 to 8 CSR 30-3.060, the Prevailing Wage Law Rules (the "Rules"); and

c. the Annual Wage Order (Wage Order) issued by the State of Missouri's Department of Labor and Industrial Relations; and

d. any applicable Annual Incremental Wage Increase (Wage Increase) to the Annual Wage Order.

2. The Law, Rules, Annual Wage Order and any Wage Increase are incorporated into and made part hereof this Contract and shall be collectively referred to in this Section as the "Prevailing Wage Requirements."

3. CONTRACTOR shall pay and require its Subcontractors to pay to all workers performing work under this Contract not less than the prevailing hourly rate of wages for the class or type of work performed by the worker in accordance with the Law, Rules, Wage Order and any applicable Wage Increase. CONTRACTOR shall take whatever steps are necessary to insure that the prevailing hourly wage rates are paid and that all workers for CONTRACTOR and each of its Subcontractors are paid for the class or type of work performed by the worker in accordance with the Prevailing Wage Requirements.

4. Prior to each of its Subcontractors beginning Work on the Site, CONTRACTOR shall require each Subcontractor to complete CITY's Form 00490 entitled "Pre-contract Certification" that sets forth the Subcontractor's prevailing wage and tax compliance history for the two (2) years prior to the bid. CONTRACTOR shall retain one (1) year and make the Pre-contract Certifications available to CITY within five (5) days after written request.

5. CONTRACTOR shall:

a. Keep and require each of its Subcontractors engaged in the construction of public works in performance of the Contract to keep full and accurate records on City's "Daily Labor Force Report" Form indicating the worker's name, occupational title or classification group & skill and the workers' hours. City shall furnish blank copies of the Daily Labor Force Report Form to Contractor for its use and for distribution to Subcontractors. Contractor shall submit its and its Subcontractors Daily Labor Force Reports to City each day; and

b. Submit, and require each of its Subcontractors engaged in the construction of public works in performance of the Contract to submit electronically, in a format prescribed by the City, Certified Payroll Report Information indicating the worker's name, address, social security number, occupation(s), craft(s) of every worker employed in connection with the public work together with the number of hours worked by each worker and the actual wages paid in connection with the Project and other pertinent information as requested by the City; and

c. Submit, and require each of its Subcontractors engaged in the construction of public works in performance of the Contract to submit, electronically, in format prescribed by the City, a Payroll Certification. The Payroll Certification must be signed by the employee or agent who pays or supervises the payment of the workers employed under the Contract for the Contractor and each Subcontractor.

d. The Daily Labor Force Report, documents used to compile information for the Certified Payroll Report, and Payroll Certification are collectively referred to in this Section as the "Records."

6. CONTRACTOR shall submit its and its Subcontractors Daily Labor Force Reports to CITY each day. CONTRACTOR shall make all of CONTRACTOR's and Subcontractors' Records open to inspection by any authorized representatives of OWNER and the Missouri Department of Labor and Industrial Relations at any reasonable time and as often as they may be necessary and such Records shall not be destroyed or removed from the State of Missouri for a period of one (1) year following the completion of the public work in connection with which the Records are made. CONTRACTOR shall have its and its Subcontractors Certified Payroll Reports and Payroll Certifications available at the CONTRACTOR's office and shall provide the Records to the City electronically at City's sole discretion. In addition, all Records shall be considered a public record and CONTRACTOR shall provide the Records to the CITY in the format required by the CITY within three (3) working days of any request by CITY at the CONTRACTOR's cost. CITY, in its sole discretion, may require CONTRACTOR to send any of the Records directly to the person who requested the Record at CONTRACTOR's expense.

7. CONTRACTOR shall post and keep posted a clearly legible statement of all prevailing hourly wage rates to be paid to all workers employed by CONTRACTOR and each of its Subcontractors in the performance of this Contract in a prominent and easily accessible place at the Site of the Work by all workers.

8. If the Contract Price exceeds $250,000.00, CONTRACTOR shall and shall require each Subcontractor engaged in any construction of public works to have its name, acceptable abbreviation or recognizable logo and the name of the city and state of the mailing address of the principal office of the company, on each motor vehicle and motorized self-propelled piece of equipment which is used in connection with the Project during the time the CONTRACTOR or Subcontractor is engaged on the project. The sign shall be legible from a distance of twenty (20') feet, but the size of the lettering need not be larger than two (2") inches. In cases where equipment is leased or where affixing a legible sign to the equipment is impractical, the CONTRACTOR may place a temporary stationary sign, with the information required pursuant to this section, at the main entrance of the Project in place of affixing the required information on the equipment so long as such sign is not in violation of any state or federal statute, rule or regulation. Motor vehicles which are required to have similar information affixed thereto pursuant to requirements of a regulatory agency of the state or federal government are exempt from the provisions of this subsection.

9. CONTRACTOR must correct any errors in CONTRACTOR's or any Subcontractors' Records, or CONTRACTOR's or any Subcontractors' violations of the Law, Rules, Annual Wage Order and any Wage Increase within fourteen (14) calendar days after notice from CITY.

10. CONTRACTOR shall and shall require its Subcontractors to cooperate with the CITY and the Department of Labor and Industrial Relations in the enforcement of this Section, the Law, Rules, Annual Wage Order and any Wage Increase. Contractor shall and shall require its Subcontractors to permit CITY and the Department of Labor and Industrial Relations to interview any and all workers during working hours on the Project at CONTRACTOR's sole cost and expense.

11. CONTRACTOR shall file with CITY, upon completion of the Project and prior to final payment therefore, affidavits from CONTRACTOR and each of its Subcontractors, stating that each has fully complied with the provisions and requirements of the Missouri Prevailing Wage Law. CITY shall not make final payment until the affidavits, in proper form and order, from CONTRACTOR and each of its Subcontractors, are filed by CONTRACTOR.

12. CONTRACTOR shall forfeit as a statutory penalty to the CITY one hundred dollars ($100.00) for each worker employed, for each calendar day, or portion thereof, such worker is paid less than the prevailing hourly rates for any work done under this Contract, by CONTRACTOR or by any of CONTRACTOR's Subcontractors. If CONTRACTOR or any of its Subcontractors have violated any section(s) of 290.210 to 290.340, RSMo, in the course of the execution of the Contract, CITY shall when making payments to the CONTRACTOR becoming due under this Contract, withhold and retain therefrom all sums and amounts due and owing as a result of any violation of sections 290.210 to 290.340, RSMo.

J. Prevailing Wage Damages. CONTRACTOR acknowledges and agrees that, based on the experience of CITY, violations of the Missouri Prevailing Wage Act, whether by CONTRACTOR or its Subcontractors, commonly result in additional costs to CITY. CONTRACTOR agrees that additional costs to CITY for any particular violation are difficult to establish and include but are not limited to: costs of construction delays, additional work for CITY, additional interest expenses, investigations, and the cost of establishing and maintaining a special division working under the City Manager to monitor prevailing wage compliance.

1. In the event of the failure by CONTRACTOR or any of its Subcontractors to pay wages as provided in the Missouri Prevailing Wage Act, CITY shall be entitled to deduct from the Contract Price, and shall retain as liquidated damages, one hundred dollars ($100.00) per day, per worker who is paid less than the prevailing hourly rate of wages, to approximate the additional costs. The sum shall be deducted, paid or owed whether or not the Contract Times have expired.

2. CITY shall give written notice to CONTRACTOR setting forth the workers who have been underpaid, the amount of the statutory penalty and the amount of the liquidated damages as provided for in this Subparagraph **J.** CONTRACTOR shall have fourteen (14) calendar days to respond, which time may be extended by CITY upon written request. If CONTRACTOR fails to respond within the specified time, the CITY's original notice shall be deemed final. If CONTRACTOR responds to CITY's notice, CITY will furnish CONTRACTOR a final decision in writing within five (5) days of completing any investigation.

K. Missouri Secretary of State Business Entity Registration. CONTRACTOR shall obtain from all Subcontractors for the Project, a copy of their current certificate of good standing or fictitious name registration from the Missouri Secretary of State before they begin work on the Site. CONTRACTOR shall retain such documents in its files and make available to CITY within ten (10) days after written request.

L. Tropical Hardwoods. The provisions of Code Section 2-1872, restricting the use of tropical hardwoods, shall apply to this Contract.

M. Preference for Missouri Products. Pursuant to Section 71.140 RSMo., preference shall be given to materials, products, supplies and all other articles produced, manufactured, made or grown within the State of Missouri.

N. Guidelines for Open Excavations. CONTRACTOR shall restore required excavations to the level of the adjacent surfaces as soon as practicable. Unsupervised open excavations on public properties are discouraged at all times. If CONTRACTOR, in performance of the Work, makes or causes to be made any excavation in, upon, under, through or adjoining any street, sidewalk, alley, park, boulevard, parkway or any other public properties, and shall leave any part or portion thereof open, CONTRACTOR shall provide effective protection to the public.

CONTRACTOR shall protect and secure all excavations in roadways in compliance with existing federal, state and local codes and standards, including, but not limited to the most current edition of the Manual of Uniform Traffic Control Devices. CONTRACTOR shall protect and secure all unsupervised excavations not within roadways, either by covering or fencing.

a. Covering. A protective cover that can sustain the weight of persons or of objects that are placed upon it may be installed over an unsupervised excavation. The cover shall

be secured to the ground to prevent movement. Protective covers shall have no opening(s) or protuberance(s) of sufficient size to cause a fall and/or injury. Advance warning devices shall be installed as necessary.

b. Fencing. Fencing to prevent entry may be installed surrounding an unsupervised excavation not protectively covered in its entirety. The fencing shall be a minimum of 42" in height. The fencing shall be constructed in such a manner that it is adequately secured and will remain upright at all times under normal Site conditions. All protective coverings and fences over and around excavations shall be inspected at least daily to assure integrity. Protective coverings and/or fences in heavily trafficked areas shall be inspected more often as necessary.

O. Notification of Utilities. CONTRACTOR shall adhere to the provisions of Sections 319.010 et seq., RSMo., which requires that a person or firm making an excavation in any public street, road or alley, right of way dedicated to public use, utility easement of record, or within any private street or private property do so only after giving notice to, and obtaining information from, owners of Underground Facilities. The 24-hour, toll-free accident prevention hotline number in Missouri is 1-800-344-7483 (1-800-Digrite).

P. Employee Eligibility Verification. CONTRACTOR shall adhere to the provisions of Sections 285.525 et seq., RSMo., which requires that for any contract exceeding five thousand dollars ($5,000.00), CONTRACTOR shall execute and submit an affidavit, in a form prescribed by CITY, affirming that CONTRACTOR does not knowingly employ any person in connection with the contracted services who does not have the legal right or authorization under federal law to work in the United States as defined in 8 U.S.C.§ 1324a(h)(3). CONTRACTOR shall attach to the affidavit documentation sufficient to establish CONTRACTOR'S enrollment and participation in an electronic verification of work program operated by the United States Department of Homeland Security (E-Verify) or an equivalent federal work authorization program operated by the United States Department of Homeland Security to verify information of newly hired employees, under the Immigration Reform and Control Act of 1986. CONTRACTOR may obtain additional information about E-Verify and enroll at https://e-verify.uscis.gov/enroll/StartPage.aspx?JS=YES.

Q. For those Contractors enrolled in E-Verify, the first and last pages of the E-Verify Memorandum of Understanding that CONTRACTOR will obtain upon successfully enrolling in the program shall constitute sufficient documentation for purposes of complying with this Section. CONTRACTOR shall submit the affidavit and attachments to CITY prior to execution of the Contract, or at any point during the term of the Contract if requested by City.

R. OSHA 10-Hour Training Requirement. CONTRACTOR and any subcontractor working under this Contract shall require every employee on the Site to complete a ten-hour construction safety program which meets the requirements of Section 292.675, RSMo, except for those employees who shall have previously completed the required program and hold documentation to that effect. CONTRACTOR shall remove or require the removal of any person from the Site who is subject to this requirement and who does not complete or is unable to produce documentation of their successful completion of the required program within the time limitations prescribed by Section 292.675, RSMo. CONTRACTOR shall forfeit the sum of two thousand five hundred dollars ($2,500.00), in addition to one hundred dollars ($100.00) per employee each calendar day, or portion thereof, the employee(s) shall continue to be employed without having completed the required program within the time limitations prescribed by Section 292.675, RSMo. CITY shall be entitled to withhold and retain any amounts due and owing hereunder when making payment to CONTRACTOR.

S. Clean Air Act and Clean Water Act. CONTRACTOR shall comply with requirements of the Clean Air Act (42 U.S.C. 7401 et seq.); Clean Water Act (33 U.S.C. 1251 et seq.), Missouri Clean Water Law (Chapter 644 RSMo), Code of Federal regulations (Title 40: Protection of Environment, Title 33: Navigation and Navigable Waters) and the rules of the Missouri Code of State Regulations (CSR Title 10).

T. Contract information Management System. If applicable, CONTRACTOR shall comply with CITY's Contract Information Management System requirements. CONTRACTOR shall use CITY's Internet web based Contract Information Management System/Project Management Communications Tool provided by CITY and protocols included in that software during the term of this Contract. CONTRACTOR shall maintain user applications to CITY's provided system for all personnel, subcontractors or suppliers as applicable and shall require subcontractors/subconsultants to maintain same.

6.11 Taxes

A. A. CONTRACTOR shall pay all sales, consumer, use and other similar taxes required to be paid by CONTRACTOR in accordance with the Laws or Regulations of the place of the Project which are applicable during the performance of the Work.

B. Tax Compliance.

1. As a condition precedent to CITY making its first payment to CONTRACTOR under this Contract, CONTRACTOR shall furnish to CITY sufficient proof from City's Commissioner of Revenue, dated not more than one (1) year prior to the date provided to CITY, verifying that CONTRACTOR is in compliance with the license and tax ordinances administered by City's Revenue Division of the Finance Department.

2. As a condition precedent to Subcontractors performing any Work under this Contract, CONTRACTOR shall obtain from Subcontractor sufficient proof from City's Commissioner of Revenue, dated not more than one (1) year before the date Subcontractor begins Work, verifying that the Subcontractor is in compliance with the license and tax ordinances administered by City's Revenue Division of the Finance Department. CONTRACTOR shall retain such documentation in its files and make available to CITY within ten (10) days after a written request.

3. As a condition precedent to CITY making final payment under this Contract, if this Contract is longer than one (1) year and exceeds the dollar threshold established by ordinance and included in the Supplementary Conditions, CONTRACTOR shall furnish to CITY sufficient proof from City's Commissioner of Revenue, dated not more than one (1) year before the filing of a final Application for Payment, verifying that CONTRACTOR is in compliance with the license and tax ordinances administered by City's Revenue Division of the Finance Department.

4. If this Contract is longer than one (1) year and exceeds the dollar threshold established by ordinance and included in the Supplementary Conditions, CONTRACTOR shall obtain from Subcontractors sufficient proof from City's Commissioner of Revenue, dated not more than one (1) year before the date of CONTRACTOR's final payment to the Subcontractor, that the Subcontractor was or is in compliance with the license and tax ordinances administered by City's Revenue Division of the Finance Department. CONTRACTOR shall retain such documentation in its files and make available to CITY within ten (10) days after written request.

5. If, at the time of final payment to CONTRACTOR, CONTRACTOR is unable to obtain from all its Subcontractors, if any, and furnish to CITY sufficient proof from City's Commissioner of Revenue that all its Subcontractors are in compliance with the license and tax ordinances administered by City's Revenue Division of the Finance Department, CITY may approve final payment to CONTRACTOR if CITY determines that CONTRACTOR has made a good faith effort to furnish evidence or that there are other extenuating circumstances which make it impossible for CONTRACTOR to furnish sufficient proof.

C. Missouri Sales Tax Exemption. Pursuant to Section 144.062, RSMo, CITY is a Missouri exempt entity and tangible personal property to be incorporated or consumed in the construction of this Project may be purchased without sales tax. CITY shall furnish CONTRACTOR a Missouri Project Exemption Certificate for Sales Tax at the time of issuance of the Notice to Proceed.

6.12 Use of Site and Other Areas

A. CONTRACTOR shall confine construction equipment, the storage of materials and equipment, and the operations of workers to the Site and other areas identified in and permitted by the Contract Documents and other areas permitted by Laws or Regulations. CONTRACTOR shall not unreasonably encumber the Site and the other areas with construction equipment or other materials or equipment. CONTRACTOR shall assume full responsibility for any damage to the Site or the other areas, or to the owner or occupant thereof, or of any adjacent land or areas, resulting from the performance of the Work.

B. Should any claim be made by any such owner or occupant because of the performance of the Work, CONTRACTOR shall promptly settle with such other party by negotiation or otherwise resolve the claim by arbitration or other dispute resolution proceeding or at law. In case of a failure on the part of the CONTRACTOR to restore such property or to make good such damage or injuries, the CITY may, upon forty-eight (48) hours written notice to the CONTRACTOR, repair, rebuild or otherwise restore such property as the CITY may deem necessary, and the cost thereof will be deducted from any moneys due or which may become due the CONTRACTOR under this Contract.

C. CONTRACTOR shall, to the fullest extent permitted by Laws or Regulations, defend, indemnify and hold harmless CITY, DESIGN PROFESSIONAL, Consultants and the officers, directors, employees, agents and other consultants of each and any of them from and against all claims, costs, losses and damages (including but not limited to all fees and charges of engineers, architects, attorneys, and other professionals and all court or arbitration or other dispute resolution costs) arising out of or resulting from any claim or action, legal or equitable, brought by any such owner or occupant against CITY, DESIGN PROFESSIONAL or any other party indemnified hereunder to the extent caused by or based upon CONTRACTOR's performance of the Work.

D. During the progress of the Work, CONTRACTOR shall keep the Site and the other areas free from accumulations of waste materials, rubbish and other debris resulting from the Work. At the completion of the Work CONTRACTOR shall remove all waste materials, rubbish and debris from Site and other areas as well as all tools, appliances, construction equipment and machinery and surplus materials. CONTRACTOR shall leave the Site clean and ready for utilization or occupancy by CITY at Achievement of Full Operation of the Work. CONTRACTOR shall restore to all property not designated for alteration by the Contract Documents to its pre-Work condition.

E. CONTRACTOR shall not load nor permit any part of any structure to be loaded in any manner that will endanger the structure, nor shall CONTRACTOR subject any part of the Work or adjacent property to stresses or pressures that will endanger it.

6.13 Record Documents

A. CONTRACTOR shall maintain in a safe place at the Site one record copy of all Drawings, Specifications, Addenda, the Contract, Written Amendments, Change Orders, Work Change Directives, and written interpretations and clarifications in good order and annotated to show all changes made during construction. These record documents, together with all approved Samples and a counterpart of all approved Shop Drawings, will be available to CITY and DESIGN PROFESSIONAL for reference. Upon completion of the Work, these record documents, Samples and Shop Drawings will be delivered to DESIGN PROFESSIONAL for CITY.

6.14 Safety and Protection

A. CONTRACTOR shall be solely responsible for initiating, maintaining and supervising all safety precautions and programs in connection with the Work. CONTRACTOR shall comply with all applicable Laws or Regulations relating to the safety of persons or property to protect them from damage, injury or loss; and shall erect and maintain all necessary safeguards for safety and protection. CONTRACTOR shall deliver to CITY a copy of CONTRACTOR'S Health and Safety Plan as provided in the Notice of Intent to Contract.

B. CONTRACTOR shall notify owners of adjacent property and of Underground Facilities and other utility owners when prosecution of the Work may affect them, and shall cooperate with them in the protection, removal, relocation and replacement of their property. All damage, injury or loss to any property referred to in Paragraph 6.14 B.2 or 6.14 B.3 caused, directly or indirectly, in whole or in part, by CONTRACTOR, any Subcontractor, Supplier or any other person or organization directly or indirectly employed by any of them to perform or furnish any of the Work or anyone for whose acts any of them may be liable, shall be remedied by CONTRACTOR (except damage or loss attributable to the fault of Drawings or Specifications or to the acts or omissions of CITY, DESIGN PROFESSIONAL, Consultant, or anyone employed by any of them or anyone for whose acts any of them may be liable, and not attributable, directly or indirectly, in whole or in part, to the fault or negligence of CONTRACTOR, Subcontractor, Supplier or other person or organization directly or indirectly employed by any of them). CONTRACTOR's duties and responsibilities for safety and for protection of the Work shall continue until such time as all the Work is completed and DESIGN PROFESSIONAL has issued a notice to CONTRACTOR in accordance with Paragraph 14.07 that the Work is acceptable (except as otherwise expressly provided in connection with Achievement of Full Operation). CONTRACTOR shall take all necessary precautions for the safety of, and shall provide the necessary protection to prevent damage, injury or loss to:

1. all persons on the Site or who may be affected by the Work;

2. all the Work and materials and equipment to be incorporated therein, whether in storage on or off the Site; and

3. other property at the Site or adjacent thereto, including trees, shrubs, lawns, walks, pavements, roadways, structures, utilities and Underground Facilities not designated for removal, relocation or replacement in the course of the Work.

6.15 Safety Representative

A. In accordance with OSHA standards, CONTRACTOR shall designate a qualified and experienced safety representative whose duties and responsibilities shall be the prevention of accidents and the maintaining and supervising of safety precautions and programs. CONTRACTOR's safety representative shall remain at the Site whenever there is Work in progress and shall immediately notify CITY of any emergencies or accidents occurring at the Site

6.16 Hazard Communication Programs

A. CONTRACTOR shall be responsible for coordinating any exchange of material safety data sheets or other hazard communication information required to be made available to or exchanged between or among employers at the Site in accordance with Laws or Regulations.

6.17 Emergencies

A. In emergencies affecting the safety or protection of persons or the Work or property at the Site or adjacent thereto, CONTRACTOR, without special instruction or authorization from CITY or DESIGN PROFESSIONAL, is obligated to act to prevent threatened damage, injury or loss. CONTRACTOR shall give CITY and DESIGN PROFESSIONAL prompt written notice if CONTRACTOR believes that any significant changes in the Work or variations from the Contract Documents have been caused thereby or are required as a result thereof. If CITY determines that a change in the Contract Documents is required because of the action taken by CONTRACTOR in response to an emergency, a Work Change Directive or Change Order will be issued.

B. A change in the Contract Documents pursuant to Paragraph 6.15 A will not be an automatic authorization of, nor a condition precedent to, entitlement to adjustment in the Contract Price or Contract Times. If CITY and CONTRACTOR are unable to agree on entitlement to, or magnitude of, an equitable adjustment in the Contract Price or Contract Times, a Claim may be made therefore as provided in Article 16. However, OWNER, DESIGN PROFESSIONAL and Consultants shall not be liable to CONTRACTOR for any costs, losses or damages (including but not limited to all fees and charges of engineers, architects, attorneys, and other professionals and

all other dispute resolution costs) sustained by CONTRACTOR on or in connection with any other project or anticipated project.

6.18 Shop Drawings and Samples

A. CONTRACTOR shall submit Shop Drawings to DESIGN PROFESSIONAL for review and approval in accordance with the accepted schedule of Shop Drawings and Sample submittals (see Paragraph 2.07). All submittals shall be identified as DESIGN PROFESSIONAL may require and in the number of copies specified in the General Requirements. The data shown on the Shop Drawings shall be complete with respect to quantities, dimensions, specified performance and design criteria, materials and similar data to show DESIGN PROFESSIONAL the services, materials and equipment CONTRACTOR proposes to provide and to enable DESIGN PROFESSIONAL to review the information for the limited purposes required by Paragraph 6.18 D.

B. CONTRACTOR shall also submit Samples to DESIGN PROFESSIONAL for review and approval in accordance with said accepted schedule of Shop Drawings and Sample submittals. Each Sample shall be identified clearly as to material, Supplier, pertinent data such as catalog numbers and the use for which intended and otherwise as DESIGN PROFESSIONAL may require to enable DESIGN PROFESSIONAL to review the submittal for the limited purposes required by Paragraph 6.18 D. The numbers of each Sample to be submitted will be as specified in the Specifications.

C. Submittal Procedures:

1. Before submitting each Shop Drawing or Sample, CONTRACTOR shall have determined and verified:

a. all field measurements, quantities, dimensions, specified performance criteria, installation requirements, materials, catalog numbers and similar information with respect thereto;

b. all materials with respect to intended use, fabrication, shipping, handling, storage, assembly and installation pertaining to the performance of the Work;

c. all information relative to means, methods, techniques, sequences and procedures of construction and safety precautions and programs incident thereto; and

d. CONTRACTOR shall also have reviewed and coordinated each Shop Drawing or Sample with other Shop Drawings and Samples and with the requirements of the Work and the Contract Documents.

2. Each submittal shall bear a stamp or specific written indication that CONTRACTOR has satisfied CONTRACTOR's obligations under the Contract Documents with respect to CONTRACTOR's review and approval of that submittal.

3. At the time of each submission, CONTRACTOR shall give DESIGN PROFESSIONAL specific written notice of such variations, if any, that the Shop Drawing or Sample submitted may have from the requirements of the Contract Documents, the notice to be in a written communication separate from the submittal, and, in addition, shall cause a specific notation to be made on each Shop Drawing and Sample submitted to DESIGN PROFESSIONAL for review and approval of each such variation.

D. DESIGN PROFESSIONAL's Review:

1. DESIGN PROFESSIONAL will review and approve Shop Drawings and Samples in accordance with the schedule of Shop Drawings and Sample submittals accepted by DESIGN PROFESSIONAL as required by Paragraph 2.06. DESIGN PROFESSIONAL's review and approval will be only to determine if the items covered by the submittals will, after installation or incorporation into the Work, conform to the information given in the Contract Documents

and be compatible with the design concept of the completed Project as a functioning whole as indicated by the Contract Documents.

2. DESIGN PROFESSIONAL's review and approval will not extend to means, methods, techniques, sequences or procedures of construction (except where a particular means, method, technique, sequence or procedure of construction is specifically and expressly called for by the Contract Documents) or to safety precautions or programs incident thereto. The review and approval of a separate item as such will not indicate approval of the assembly in which the item functions.

3. DESIGN PROFESSIONAL's review and approval of Shop Drawings or Samples shall not relieve CONTRACTOR from responsibility for any variation from the requirements of the Contract Documents unless CONTRACTOR has in writing called DESIGN PROFESSIONAL's attention to each such variation at the time of submission as required by Paragraph 6.18 C.3, and DESIGN PROFESSIONAL has given written approval of each such variation by specific written notation thereof incorporated into or accompanying the Shop Drawing or Sample approval; nor will any approval by DESIGN PROFESSIONAL relieve CONTRACTOR from responsibility for complying with the requirements of Paragraph 6.18 C.1.

E. Where a Shop Drawing or Sample is required by the Contract Documents or the schedule of Shop Drawings and Sample submissions accepted by DESIGN PROFESSIONAL as required by Paragraph 2.06, any related Work performed prior to DESIGN PROFESSIONAL's review and approval of the pertinent submittal will be at the sole expense and responsibility of CONTRACTOR.

F. CONTRACTOR shall make corrections required by DESIGN PROFESSIONAL and shall return the required number of corrected copies of Shop Drawings and submit as required new Samples for review and approval. CONTRACTOR shall direct specific attention in writing to revisions other than the corrections called for by DESIGN PROFESSIONAL on previous submittals.

6.19 Continuing the Work

A. CONTRACTOR shall carry on the Work and adhere to the progress schedule during all disputes or disagreements with CITY No Work shall be delayed or postponed pending resolution of any disputes or disagreements, except as permitted by Paragraph 15.04 or as CITY and CONTRACTOR may otherwise agree in writing.

6.20 CONTRACTOR's General Warranty and Guarantee

B. CONTRACTOR warrants and guarantees to CITY, DESIGN PROFESSIONAL and Consultants that all Work will be in accordance with the Contract Documents and will not be defective. CONTRACTOR's warranty and guarantee hereunder excludes defects or damage caused by:

1. abuse, modification or improper maintenance or operation by persons other than CONTRACTOR, Subcontractors, Suppliers or any other individual or entity for whom CONTRACTOR is responsible; or

2. normal wear and tear under normal usage.

C. CONTRACTOR's obligation to perform and complete the Work in accordance with the Contract Documents shall be absolute. None of the following will constitute an acceptance of Work that is not in accordance with the Contract Documents or a release of CONTRACTOR's obligation to perform the Work in accordance with the Contract Documents:

1. observations by DESIGN PROFESSIONAL;

2. recommendation of any progress or final payment by DESIGN PROFESSIONAL;

3. the issuance of a certificate of Achievement of Full Operation or any payment related thereto by CITY to CONTRACTOR;

4. use or occupancy of the Work or any part thereof by OWNER;

5. any review and approval of a Shop Drawing or Sample submittal or the issuance of a notice of acceptability by DESIGN PROFESSIONAL;

6. any inspection, test or approval by others; or

7. any correction of defective Work by CITY.

D. Nonconforming Work is rejected unless expressly accepted in writing by the CITY's Representative.

ARTICLE 7 OTHER WORK

7.01 Related Work at Site

A. A. CITY may perform other work related to the Project at the Site by CITY's own forces, or let other direct contracts therefore, or have other work performed by utility owners. If such other work is to be performed and such fact was not noted in the Contract Documents, then:

1. Written notice thereof will be given to CONTRACTOR prior to starting any such other work, and

2. CONTRACTOR may make a Claim therefore as provided in Article 16 if CONTRACTOR believes that such performance involves additional expense to CONTRACTOR or requires additional time and the parties are unable to agree as to the amount or extent thereof.

B. CONTRACTOR shall afford each other contractor who is a party to such a direct contract, and each utility owner (and CITY, if CITY is performing the additional work with CITY's employees) proper and safe access to the Site and a reasonable opportunity for the introduction and storage of materials and equipment and the execution of such other work and shall properly connect and coordinate the Work with theirs. Unless otherwise provided in the Contract Documents, CONTRACTOR shall do all cutting, fitting and patching of the Work that may be required to properly connect or otherwise make its several parts come together and properly integrate with such other work. CONTRACTOR shall not endanger any work of others by cutting, excavating or otherwise altering their work and will only cut or alter their work with the written consent of CITY and the others whose work will be affected. The duties and responsibilities of CONTRACTOR under this Paragraph are for the benefit of such utility owners and other contractors to the extent that there are comparable provisions for the benefit of CONTRACTOR in said direct contracts between CITY and such utility owners and other contractors.

C. If the proper execution or results of any part of CONTRACTOR's Work depends upon work performed by others under this Article 7, CONTRACTOR shall inspect such other work and promptly report to CITY and DESIGN PROFESSIONAL in writing any delays, defects or deficiencies in such other work that render it unavailable or unsuitable for the proper execution or results of CONTRACTOR's Work. CONTRACTOR's failure to report same will constitute an acceptance of such other work as fit and proper for integration with CONTRACTOR's Work, except for latent or non-apparent defects and deficiencies in such other work.

7.02 Coordination

A. If CITY contracts with others for the performance of other work on the Project at the Site, the following will be set forth in Supplementary Conditions:

1. the person, firm or corporation who will have authority and responsibility for coordination of the activities among the various prime contractors will be identified;

2. the specific matters to be covered by such authority and responsibility will be itemized; and

3. the extent of such authority and responsibilities will be provided.

B. Unless otherwise provided in the Supplementary Conditions, CITY shall have sole authority and responsibility in respect of such coordination.

ARTICLE 8 CITY's RESPONSIBILITIES

8.01 Communications to CONTRACTOR

A. Except as otherwise provided in these General Conditions, CITY shall issue all communications to CONTRACTOR.

8.02 Replacement of DESIGN PROFESSIONAL

A. In case of termination of the employment of DESIGN PROFESSIONAL, CITY shall appoint a DESIGN PROFESSIONAL whose status under the Contract Documents shall be that of the former DESIGN PROFESSIONAL.

8.03 Furnish Data and Prompt Payment

A. CITY shall promptly furnish the data required of OWNER under the Contract Documents and shall make payments to CONTRACTOR when they are due.

8.04 Lands and Easements; Reports and Tests

A. CITY's duties in respect of providing lands and easements and providing engineering surveys to establish reference points are set forth in Paragraphs 4.01 and 4.05. Paragraph 4.02 refers to CITY's duty to identify and make available to CONTRACTOR copies of reports of explorations and tests of subsurface conditions at the Site and drawings of physical conditions in existing structures at or contiguous to the Site that have been utilized by DESIGN PROFESSIONAL in preparing the Contract Documents.

8.05 Insurance

A. CITY's responsibilities, if any, for purchasing and maintaining liability and property insurance are set forth in Article 5 and the Supplementary Conditions.

8.06 Change Orders

A. CITY is obligated to execute Change Orders as indicated in Paragraph 10.03.

8.07 Inspections, Tests and Approvals

A. CITY's responsibility for certain inspections, tests and approvals is set forth in Paragraph 13.02 F.

8.08 Limitations on CITY's Responsibilities

A. The CITY shall not supervise, direct or have control or authority over, nor be responsible for, CONTRACTOR's means, methods, techniques, sequences or procedures of construction, or the safety precautions and programs incident thereto, or for any failure of CONTRACTOR to comply with Laws or Regulations applicable to the furnishing or performance of the Work. CITY will not be responsible for CONTRACTOR's failure to perform or furnish the Work in accordance with the Contract Documents.

8.09 Undisclosed Hazardous Environmental Condition

A. CITY's responsibility for an undisclosed Hazardous Environmental Condition uncovered or revealed at the Site is set forth in Paragraph 4.06.

8.10 Evidence of Financial Arrangements

A. CITY will furnish CONTRACTOR reasonable evidence that financial arrangements have been made to satisfy OWNER's obligations under the Contract.

8.11 CITY's Representative

A. CITY will provide a representative during the construction period. The duties, responsibilities and the limitations of authority of the CITY '"s Representative during construction are set forth in the Contract Documents.

8.12 Visits to Site

A. CITY's Representative will make visits to the Site at intervals appropriate to the various stages of construction as CITY's Representative deems necessary in order to observe the progress that has been made and the quality of the various aspects of CONTRACTOR's executed Work. Based on information obtained during such visits and observations, CITY's Representative will endeavor to determine, in general, if the Work is proceeding in accordance with the Contract Documents. CITY's Representative will not be required to make exhaustive or continuous on-Site inspections to check the quality or quantity of the Work.

ARTICLE 9 DESIGN PROFESSIONAL's STATUS DURING CONSTRUCTION

9.01 General Scope of DESIGN PROFESSIONAL's Duties

A. DESIGN PROFESSIONAL's efforts will be directed toward providing for CITY a greater degree of confidence that the completed Work will conform generally to the Contract Documents. On the basis of visits to the Site and on-Site observations, DESIGN PROFESSIONAL will keep CITY informed of the progress of the Work and will endeavor to guard CITY against defective Work. DESIGN PROFESSIONAL's visits to the Site and on-Site observations are subject to all the limitations on DESIGN PROFESSIONAL's authority and responsibility set forth in Paragraph 9.08.

9.02 Resident Project Representative

A. If CITY and DESIGN PROFESSIONAL agree, DESIGN PROFESSIONAL will furnish a resident Project representative to assist DESIGN PROFESSIONAL in providing more extensive observation of the Work. The responsibilities, authority and limitations thereon of any such resident Project representative and assistants will be as provided in Paragraph 9.08 and in the Supplementary Conditions.

9.03 Clarifications and Interpretations

A. DESIGN PROFESSIONAL will issue with reasonable promptness written clarifications or interpretations (which may be in the form of Drawings) of the requirements of the Drawings and Specifications prepared by the DESIGN PROFESSIONAL as DESIGN PROFESSIONAL may determine necessary, which shall be consistent with the intent of and reasonably inferable from the Contract Documents. Such written clarifications and interpretations will be binding on CITY and CONTRACTOR. If CITY or CONTRACTOR believes that a written clarification or interpretation justifies an adjustment in the Contract Price pursuant to Article 11 and/ or the Contract Times pursuant to Article 12 and the parties are unable to agree to the amount or extent thereof, if any, a Claim may be made therefore as provided in Article 16.

9.04 Rejecting Defective Work

A. DESIGN PROFESSIONAL will have authority to disapprove or reject Work which DESIGN PROFESSIONAL believes to be defective, that DESIGN PROFESSIONAL believes will not produce a completed Project that conforms to the Contract Documents, or that will prejudice the integrity of the design concept of the completed Project as a functioning whole as indicated by the Contract Documents. DESIGN PROFESSIONAL will also have authority to require special inspection or testing of the Work as provided in Paragraph 13.04 B, whether or not the Work is fabricated, installed or completed.

9.05 Shop Drawings, Change Orders and Payments

A. In connection with DESIGN PROFESSIONAL's authority as to Shop Drawings and Samples, see Paragraph 6.18.

B. In connection with DESIGN PROFESSIONAL's authority as to Change Orders, see Article 10.

C. In connection with DESIGN PROFESSIONAL's authority as to Applications for Payment, see Article 14.

9.06 Determinations for Unit Prices

A. DESIGN PROFESSIONAL will initially determine the actual quantities and classifications of Unit Price Work performed by CONTRACTOR. DESIGN PROFESSIONAL will review with CONTRACTOR the DESIGN PROFESSIONAL's preliminary determinations on such matters before rendering a written opinion thereon (by recommendation of an Application for Payment or otherwise to the CITY). CITY reserves the right to make a final determination of the actual quantities and classifications of Unit Price Work in reviewing an Application for Payment. Within ten (10) days after the date of receipt of any such decision, CONTRACTOR may deliver to CITY and to DESIGN PROFESSIONAL written notice of intention to appeal CITY's decision pursuant to Article 16.

9.07 Decisions on Requirements of Contract Documents and Acceptability of Work

A. DESIGN PROFESSIONAL will be the initial interpreter of the requirements of the Drawings and Specifications prepared by DESIGN PROFESSIONAL and judge of the acceptability of the Work thereunder.

B. When functioning as interpreter and judge under this Paragraph 9.07, DESIGN PROFESSIONAL will not show partiality to OWNER or CONTRACTOR.

C. Claims, disputes and other matters relating to the acceptability of the Work, quantities and classifications of Unit Price Work, or the interpretation of the requirements of the Contract Documents pertaining to the performance and furnishing of the Work will be referred initially to CITY's Representative in writing with a request for a formal decision in accordance with Article 16.

9.08 Limitations on DESIGN PROFESSIONAL's Authority and Responsibilities

A. Neither DESIGN PROFESSIONAL's authority or responsibility under this Article 9 or under any other provision of the Contract Documents nor any decision made by DESIGN PROFESSIONAL in good faith either to exercise or not exercise such authority or responsibility or the undertaking, exercise or performance of any authority or responsibility by DESIGN PROFESSIONAL shall create, impose or give rise to any duty owed by DESIGN PROFESSIONAL to CONTRACTOR, any Subcontractor, any Supplier, any other person or organization, or to any surety for or employee or agent of any of them.

B. DESIGN PROFESSIONAL will not supervise, direct, control or have authority over or be responsible for CONTRACTOR's means, methods, techniques, sequences or procedures of construction, or the safety precautions and programs incident thereto, or for any failure of CONTRACTOR to comply with Laws or Regulations applicable to the furnishing or performance of the Work. DESIGN PROFESSIONAL will not be responsible for CONTRACTOR's failure to perform or furnish the Work in accordance with the Contract Documents.

C. DESIGN PROFESSIONAL will not be responsible for the acts or omissions of CONTRACTOR or of any Subcontractor, any Supplier, or of any other person or organization performing or furnishing any of the Work.

D. DESIGN PROFESSIONAL's review of the final Application for Payment and accompanying documentation, and all maintenance and operating instructions, schedules, guarantees, Bonds and certificates of inspection, tests and approvals and other documentation

required to be delivered by Paragraph 14.07 will only be to determine generally that their content complies with the requirements of, and in the case of certificates of inspections, tests and approvals, that the results certified indicate compliance with, the Contract Documents.

E. The limitations upon authority and responsibility set forth in this Paragraph 9.08 shall also apply to DESIGN PROFESSIONAL's Consultants, resident Project representative and assistants as identified in the Supplementary Conditions.

ARTICLE 10 CHANGES IN THE WORK

10.01 Authorized Changes in the Work

A. Without invalidating the Contract and without notice to any surety, CITY may, at any time or from time to time, order additions, deletions or revisions in the Work. Such additions, deletions or revisions will be authorized by a Written Amendment, a Change Order, or a Work Change Directive. Upon receipt of any such document, CONTRACTOR shall promptly proceed with the Work involved that will be performed under the applicable conditions of the Contract Documents (except as otherwise specifically provided).

B. If CITY and CONTRACTOR are unable to agree on entitlement to, or on the amount or extent, if any, of an adjustment in the Contract Price pursuant to Article 11 or an adjustment of the Contract Times pursuant to Article 12 or both that should be allowed as a result of a Work Change Directive, a Claim may be made therefore as provided in Article 16.

10.02 Unauthorized Changes in the Work

A. CONTRACTOR shall not be entitled to an increase in the Contract Price or an extension of the Contract Times with respect to any work performed that is not required by the Contract Documents as amended, modified or supplemented as provided in Paragraph 3.04, except in the case of an emergency as provided in Paragraph 6.17 or in the case of uncovering Work as provided in Paragraph 13.04.

10.03 Signing of Change Orders

A. CITY and CONTRACTOR, and DESIGN PROFESSIONAL shall sign appropriate Change Orders covering:

1. changes in the Work which are:

   a. ordered by CITY pursuant to Paragraph 10.01 A; or

   b. required because of acceptance of defective Work under Paragraph 13.08 or correcting defective Work under Paragraph 13.09; or

   c. agreed to by the parties;

2. changes in the Contract Price or Contract Times or both which are agreed to by the parties, including any undisputed sum or amount of time for Work actually performed in accordance with a Work Change Directive; and

3. changes in the Contract Price or Contract Times or both which embody the substance of any written decision recommended by DESIGN PROFESSIONAL and approved by CITY pursuant to Paragraph 9.06, provided that, in lieu of signing any such Change Order, an appeal may be taken from any such decision in accordance with the provisions of the Contract Documents and applicable Laws or Regulations, but during any such appeal, CONTRACTOR shall carry on the Work and adhere to the progress schedule as provided in Paragraph 6.19.

4. All Change Orders shall contain the following statement:

   I certify under penalty of law that the document and all attachments were prepared under my direction or supervision in accordance with a system designed to assure that qualified personnel properly gathered and evaluated the information submitted,

and that the information submitted is, to the best of my knowledge and belief, true, accurate, and complete. I am aware that there are significant penalties for submitting false information, including the possibility of fine and imprisonment for knowing violations.

10.04 Notification to Surety

A. If notice of any change affecting the general scope of the Work or the provisions of the Contract Documents (including, but not limited to, Contract Price or Contract Times or both) is required by the provisions of any Bond to be given to a surety, the giving of any such notice will be CONTRACTOR's responsibility, and the amount of each applicable Bond will be adjusted accordingly.

ARTICLE 11 CHANGE OF CONTRACT PRICE

11.01 Change of Contract Price

A. The Contract Price constitutes the total compensation (subject to authorized adjustments) payable to CONTRACTOR for performing the Work. All duties, responsibilities and obligations assigned to or undertaken by CONTRACTOR shall be at CONTRACTOR's expense without change in the Contract Price.

B. The Contract Price may only be changed by a Change Order. Any request for an adjustment in the Contract Price shall be based on written notice delivered within fourteen (14) calendar days after occurrence of the event giving rise to the request or within fourteen (14) calendar days after first recognition of the conditions giving rise to the request. Prior notice is not required for requests or claims relating to an emergency endangering life or property as described in Paragraph 6.16. Thereafter, the CONTRACTOR shall submit written documentation of its request, including appropriate supporting documentation, within ten (10) calendar days after giving notice, unless the CITY grants an extension based on good cause shown by the CONTRACTOR that such additional time is warranted.

C. The value of any Work covered by a Change Order or of any request for an adjustment in the Contract Price will be determined as follows:

1. where the Work involved is covered by Unit Prices contained in the Contract Documents, by application of such Unit Prices to the quantities of the items involved (subject to the provisions of Paragraph 11.04); or

2. where the Work involved is not covered by Unit Prices contained in the Contract Documents, by a mutually agreed lump sum; or

3. where the Work involved is not covered by Unit Prices contained in the Contract Documents and agreement to a lump sum is not reached under Paragraph 11.01 C.2, on the basis of the Cost of the Work (determined as provided in Paragraphs 11.02 A and B) plus a CONTRACTOR's fee for overhead and profit (determined as provided in Paragraph 11.01 D).

D. The CONTRACTOR's fee allowed to CONTRACTOR for overhead and profit shall be determined as follows:

1. a mutually acceptable fixed fee; or

2. if a fixed fee is not agreed upon, then a fee based on the following percentages of the various portions of the Cost of the Work:

a. for costs incurred under Paragraphs 11.02 A.1 and 11.02 A.2, the CONTRACTOR's fee shall be ten percent (10%);

b. for costs incurred under Paragraph 11.02 A.3, the CONTRACTOR's fee shall be five percent (5%);

c. where one or more tiers of subcontracts are on the basis of the Cost of the Work plus a fee and no fixed fee is agreed upon, the intent of Paragraphs 11.01 D.2 and 11.02 A.1 through A.3 is that the Subcontractor who actually performs or furnishes the Work, at whatever tier, will be a paid a fee of ten percent (10%) of the costs incurred by such Subcontractor under Paragraphs 11.02 A.1 and 11.02 A.2 and that any higher tier Subcontractor and CONTRACTOR will each be paid a fee of five percent (5%) of the amount paid to the next lower tier Subcontractor;

d. no fee shall be payable on the basis of costs itemized under Paragraphs 11.02 A.4, 11.02 A.5 and 11.02 B;

e. the amount of credit to be allowed by CONTRACTOR to CITY for any change which results in a net decrease in cost will be the amount of the actual net decrease in costs plus a deduction in CONTRACTOR's fee by an amount equal to five percent (5%) of such net decrease; and

f. when both additions and credits are involved in any one change, the adjustment in CONTRACTOR's fee shall be computed on the basis of the net change in accordance with Paragraphs 11.01 D.2.a through 11.01 D.2.e, inclusive.

E. Whenever the Cost of the Work is to be determined pursuant to Paragraphs 11.02 A and B, CONTRACTOR shall establish and maintain records thereof in accordance with generally accepted accounting practices and submit in form acceptable to CITY an itemized cost breakdown together with supporting data.

11.02 Cost of the Work

A. The term "Cost of the Work" means the sum of all costs necessarily incurred and paid by CONTRACTOR in the proper performance of the Work. When the value of any Work covered by a Change Order or when a request for an adjustment in Contract Price is determined on the basis of Cost of the Work, the costs to be reimbursed to CONTRACTOR will be only those additional or incremental costs required because of the change in the Work or because of the event giving rise to the request. Except as otherwise agreed to in writing by CITY, costs covered by Change Orders or requests shall be in amounts no higher than those prevailing in the locality of the Project, shall include only the following items and shall not include any costs itemized in 11.02 B:

1. Payroll costs for employees in the direct employ of CONTRACTOR in the performance of the Work, using occupational titles and job classifications agreed upon by CITY and CONTRACTOR. Such employees shall include, without limitation, job Site superintendents, foremen and other personnel employed full time at the Site. Payroll costs for employees not employed full time on the Work shall be apportioned on the basis of their time spent on the Work. Payroll costs shall include, but not be limited to, salaries and wages plus the cost of fringe benefits which shall include social security contributions, unemployment, excise and payroll taxes, workers''' compensation, health and retirement benefits, bonuses, sick leave, vacation and holiday pay applicable thereto. The expenses of performing the Work after regular working hours, on Saturdays, Sundays or legal holidays, shall be included in the above to the extent authorized by OWNER.

2. Cost of all materials and equipment furnished and incorporated into the Work, including costs of transportation and storage thereof, and Suppliers's field services required in connection therewith. All cash discounts shall accrue to CONTRACTOR unless CITY deposits funds with CONTRACTOR with which to make payments, in which case the cash discounts shall accrue to CITY. All trade discounts, rebates and refunds and returns from sale of surplus materials and equipment shall accrue to CITY, and CONTRACTOR shall make provisions so that they may be obtained.

3. Payments made by CONTRACTOR to Subcontractors for Work performed or furnished by Subcontractors. If required by CITY, CONTRACTOR shall obtain competitive bids from Subcontractors acceptable to OWNER and CONTRACTOR and shall deliver such

bids to CITY who will then determine, with the advice of DESIGN PROFESSIONAL, which bids, if any, will be accepted. If any subcontract provides that the Subcontractor is to be paid on the basis of the Cost of the Work plus a fee, the Subcontractor's Cost of the Work and fee shall be determined in the same manner as CONTRACTOR's Cost of the Work and fee as provided in Paragraphs 11.01 D and E and 11.02 A and B. All subcontracts shall be subject to the other provisions of the Contract Documents insofar as applicable.

4. Costs of special consultants (including but not limited to engineers, architects, testing laboratories, surveyors, attorneys and accountants) employed for services specifically related to the Work when such services are approved in advance by CITY in writing.

5. Other costs including the following:

a. The proportion of necessary transportation, travel and subsistence expenses of CONTRACTOR's employees incurred in discharge of duties connected with the Work.

b. Cost, including transportation and maintenance, of all materials, supplies, equipment, machinery, appliances, office and temporary facilities at the Site and hand tools not owned by the workers, which are consumed in the performance of the Work, and cost, less market value of such items used but not consumed which remain the property of CONTRACTOR.

c. Rentals of all construction equipment and machinery and the parts thereof whether rented from CONTRACTOR or others in accordance with rental agreements approved by CITY with the advice of DESIGN PROFESSIONAL, and the costs of transportation, loading, unloading, installation, assembly, dismantling and removal thereof, all in accordance with the terms of said rental agreements. The rental of any such equipment, machinery or parts shall cease when the use thereof is no longer necessary for the Work.

d. Applicable sales, consumer, use or similar taxes related to the Work**,** and for which CONTRACTOR is liable, imposed by Laws or Regulations.

e. Deposits lost for causes other than negligence of CONTRACTOR, any Subcontractor or anyone directly or indirectly employed by any of them or for whose acts any of them may be liable, and royalty payments and fees for permits and licenses required to perform the Work.

f. Losses and damages (and related expenses) caused by damage to the Work**,** not compensated by insurance or otherwise, sustained by CONTRACTOR in connection with the performance and furnishing of the Work (except losses and damages within the deductible amounts of property insurance established by CITY in accordance with Article 5), provided they have resulted from causes other than the negligence of CONTRACTOR, any Subcontractor, or anyone directly or indirectly employed by any of them or for whose acts any of them may be liable. Such losses shall include settlements made with the written consent and approval of CITY. No such losses, damages and expenses shall be included in the Cost of the Work for the purpose of determining CONTRACTOR's fee. If, however, any such loss or damage requires reconstruction and CONTRACTOR is placed in charge thereof, CONTRACTOR shall be paid for those services a fee proportionate to that stated in Paragraph 11.01 D.2.

g. The cost of utilities, fuel and sanitary facilities at the Site.

h. Minor expenses such as telegrams, long distance telephone calls, telephone service at the Site, expressage and similar petty cash items in connection with the Work.

i. Cost of premiums for additional or increased Bonds, or for insurance required because of approved changes in the Work.

B. Costs excluded: The term "Cost of the Work" shall not include any of the following:

1. Payroll costs and other compensation of CONTRACTOR's officers, executives, principals (of partnership and sole proprietorships), general managers, engineers, architects, estimators, attorneys, auditors, accountants, purchasing and contracting agents, expediters, timekeepers, clerks and other personnel employed by CONTRACTOR whether at the Site or in CONTRACTOR's principal or a branch office for general administration of the Work (if not specifically included in the agreed upon occupational titles and job classifications referred to in Paragraph 11.02 A.1 or specifically covered by Paragraph 11.02 A.4), all of which are to be considered administrative costs covered by the CONTRACTOR's fee.

2. Expenses of CONTRACTOR's principal and branch offices other than CONTRACTOR's office at the Site.

3. Any part of CONTRACTOR's capital expenses, including interest on CONTRACTOR's capital employed for the Work and charges against CONTRACTOR for delinquent payments.

4. Costs due to the negligence of CONTRACTOR, any Subcontractor, or anyone directly or indirectly employed by any of them or for whose acts any of them may be liable, including but not limited to, the correction of defective Work, disposal of materials, or equipment wrongly supplied, and making good any damage to property.

5. Other overhead or general expense costs of any kind and the costs of any item not specifically and expressly included in Paragraph 11.02 A.

11.03 Cash Allowances

A. It is understood that CONTRACTOR has included in the Contract Price all allowances so named in the Contract Documents and shall cause the Work so covered to be furnished and performed for such sums as may be acceptable to CITY. CONTRACTOR agrees that:

1. the allowances include the cost to CONTRACTOR (less any applicable trade discounts) of materials and equipment required by the allowances to be delivered at the Site, and all applicable taxes; and

2. CONTRACTOR's costs for unloading and handling on the Site, labor, installation costs, overhead, profit and other expenses contemplated for the allowances have been included in the Contract Price and not in the allowances, and no demand for additional payment on account of any of the foregoing will be valid.

B. Prior to final payment, an appropriate Change Order will be issued by CITY to reflect actual amounts due CONTRACTOR on account of Work covered by allowances, and the Contract Price shall be correspondingly adjusted.

11.04 Unit Price Work

A. Where the Contract Documents provide that all or part of the Work is to be Unit Price Work, initially the Contract Price will be deemed to include for all Unit Price Work an amount equal to the sum of the established unit price for each separately identified item of Unit Price Work times the estimated quantity of each item as indicated in the Contract. The estimated quantities of items of Unit Price Work are not guaranteed and are solely for the purpose of comparison of Bids and determining an initial Contract Price. Determinations of the actual quantities and classifications of Unit Price Work performed by CONTRACTOR will be made in accordance with Paragraph 9.06.

B. Each unit price will be deemed to include an amount considered by CONTRACTOR to be adequate to cover CONTRACTOR's overhead and profit for each separately identified item.

C. CITY or CONTRACTOR may negotiate an adjustment of the price per unit of Unit Price Work stated in the Contract if:

1. the quantity of any item of Unit Price Work performed by CONTRACTOR differs by twenty percent (20%) or more from the estimated quantity of such item indicated in the Contract; and

2. there is no corresponding adjustment with respect to any other item of Work; and

3. CONTRACTOR believes that CONTRACTOR is entitled to an increase in Contract Price as a result of having incurred additional expense or CITY believes that CITY is entitled to a decrease in Contract Price.

11.05 Dispute Resolution

A. If CITY and CONTRACTOR are unable to agree on entitlement to, or magnitude of, an equitable adjustment in the Contract Price in accordance with Article 11 within fourteen (14) calendar days from the receipt of supporting documentation of the request pursuant to 11.01.B., unless the CITY grants an extension based on good cause shown by the CONTRACTOR that such additional time is warranted, then a Claim for such adjustment may be made pursuant to Article 16.

ARTICLE 12 CONTRACT TIMES

12.01 Time of the Essence

A. All times stated in the Contract Documents are of the essence of the Contract.

12.02 Change of Contract Times

A. The Contract Times (or Milestones) may only be changed by a Change Order. Any request for an adjustment in the Contract Times shall be based on written notice delivered within fourteen (14) calendar days after occurrence of the event giving rise to the request or within fourteen (14) calendar days after first recognition of the conditions giving rise to the request. Thereafter, the CONTRACTOR shall submit written documentation of its requests, including appropriate supporting documentation, within ten (10) days after giving notice, unless the CITY grants an extension based on good cause shown by the CONTRACTOR that such additional time is warranted.

12.03 Proof Required To Justify an Extension of Time For Excusable and Compensable Delays

A. In support of any request for an extension of the Contract Times pursuant to this Article, CONTRACTOR must demonstrate to the reasonable satisfaction of the CITY that the critical path of the approved baseline project schedule was delayed. CONTRACTOR shall be entitled to an increase in contract time for the number of days that the critical path was delayed solely as a result of the compensable or excusable event. A compensable or excusable event includes, but is not limited to:

1. unreasonable delay of issuance of Notice to Proceed by CITY;
2. CITY's unreasonable delay of delivery furnished materials, equipment, or work;
3. unreasonable delay responding to shop drawings and submittals;
4. CITY's unreasonable delay in issuing a Change Order;
5. an order by the CITY to stop the Work where the CONTRACTOR was not at fault; and
6. other reasonable grounds as determined by the City in its sole discretion.

B. CONTRACTOR shall compare the critical path of the approved baseline project schedule to the actual critical path of the Work, identifying the specific impact of the compensable or excusable event.

C. CONTRACTOR shall submit to the CITY a written time impact analysis illustrating the influence of each compensable or excusable event on the date of Achievement of Full Operation. The time impact analysis shall demonstrate the time impact based on the date of the delay in time and the event time computations or all affected activities.

D. If the critical path of the Work is delayed by “Force Majeure”, the CONTRACTOR shall be entitled only to an extension of the Contract Times for the number of days of delay to the critical path. For purposes of this paragraph, “Force Majeure” shall mean fire, tornado, flood, earthquake, war, act of terrorism, civil disturbance, or labor strikes away from the project site.

E. Extensions of contract time pursuant to the this section will be granted only to the extent that the time adjustments exceed the total float time available when the event causing the delay occurred.

F. As a prerequisite to being considered a valid claim, any submission to the City pursuant to this Paragraph shall contain the following statement:

> I certify under penalty of law that the document and all attachments were prepared under my direction or supervision in accordance with a system designed to assure that qualified personnel properly gathered and evaluated the information submitted, and that the information submitted is, to the best of my knowledge and belief, true, accurate, and complete. I am aware that there are significant penalties for submitting false information, including the possibility of fine and imprisonment for knowing violations.

12.04 Delays Within CONTRACTOR’s Control

A. The Contract Times (or Milestones) will not be extended due to delays within the control of CONTRACTOR. Delays attributable to and within the control of a Subcontractor or Supplier shall be deemed to be delays within the control of CONTRACTOR.

12.05 Delays Beyond the CITY’s and CONTRACTOR’s Control

A. Where CONTRACTOR is prevented from completing any part of the Work within the Contract Times (or Milestones) due to delay beyond the control of both CITY and CONTRACTOR, an extension of the Contract Times (or Milestones) in an amount equal to the time lost due to such delay shall be CONTRACTOR’s sole and exclusive remedy for such delay.

12.06 Delay Damages

A. In no event shall CITY be liable to CONTRACTOR, any Subcontractor, any Supplier, any other person or organization, or to any surety for or employee or agent of any of them, for damages arising out of or resulting from:

1. delays caused by or within the control of CONTRACTOR, or

2. delays beyond the control of CITY or CONTRACTOR including but not limited to fires, floods, epidemics, abnormal weather conditions, acts of God or acts or neglect by utility owners or other contractors performing other work as contemplated by Article 7.

B. Nothing in this Paragraph 12.06 bars a change in Contract Price pursuant to this Article 12 to compensate CONTRACTOR due to delay, interference, or disruption directly attributable to actions or inaction of CITY, DESIGN PROFESSIONAL, Consultant or anyone for whom CITY, DESIGN PROFESSIONAL or Consultant is responsible.

12.07 Dispute Resolution

A. If CITY and CONTRACTOR are unable to agree on entitlement to, or magnitude of, an equitable adjustment in the Contract Time in accordance with Article 12 within fourteen (14) calendar days from the receipt of supporting documentation of the request pursuant to 12.02, unless the CITY grants an extension based on good cause shown by the CONTRACTOR that such additional time is warranted, then a Claim for such adjustment may be made pursuant to Article 16.

ARTICLE 13 TESTS AND INSPECTIONS; CORRECTION, REMOVAL OR ACCEPTANCE OF DEFECTIVE WORK

13.01 Access to Work

A. CITY, DESIGN PROFESSIONAL, Consultants, other representatives and personnel of CITY, independent testing laboratories and governmental agencies with jurisdictional interests will have access to the Site and Work at reasonable times for their observation, inspecting and testing. CONTRACTOR shall provide them proper and safe conditions for such access and advise them of CONTRACTOR's Site safety procedures and programs so that they may comply therewith as applicable.

13.02 Tests and Inspections

A. CONTRACTOR shall give DESIGN PROFESSIONAL and CITY's Representative timely notice of readiness of the Work for all required inspections, tests or approvals, and shall cooperate with inspection and testing personnel to facilitate required inspections or tests.

B. If any Work (or the work of others at the Site) that is to be inspected, tested or approved is covered by CONTRACTOR without written approval required by Paragraphs 13.02 D or 13.02 E, it must, if requested by CITY's Representative, be uncovered for observation.

C. Uncovering Work as provided in Paragraph 13.02 B, shall be at CONTRACTOR's expense unless CONTRACTOR has given DESIGN PROFESSIONAL and CITY's Representative timely notice of CONTRACTOR's intention to cover the same and DESIGN PROFESSIONAL and CITY's Representative have not acted with reasonable promptness in response to such notice.

D. If Laws or Regulations of any public body (including City) having jurisdiction require any Work (or part thereof) specifically to be inspected, tested or approved by an employee or other representative of such public body, CONTRACTOR shall assume full responsibility for arranging and obtaining such inspections, tests or approvals, pay all costs in connection therewith, and furnish DESIGN PROFESSIONAL and CITY's Representative the required certificates of inspection or approval.

E. CONTRACTOR shall be responsible for arranging and obtaining and shall pay all costs in connection with any inspections, tests or approvals required for CITY's and DESIGN PROFESSIONAL's acceptance of materials or equipment to be incorporated into the Work, or acceptance of materials, mix designs, or equipment submitted for approval prior to CONTRACTOR's purchase thereof for incorporation into the Work. Such inspections, tests, or approvals shall be performed by organizations acceptable to CITY and DESIGN PROFESSIONAL.

F. CITY shall employ and pay for the services of an independent testing laboratory to perform all inspections, tests, or approvals required by the Contract Documents except:

1. for inspections, tests or approvals covered by Paragraph 13.02 D and E;

2. that costs incurred in connection with tests or inspections conducted pursuant to Paragraph 13.04 B shall be paid as provided in said Paragraph 13.04 B; and

3. as otherwise specifically provided in the Contract Documents.

13.03 Notice of Defects

A. Prompt notice of all defective Work of which either CITY or DESIGN PROFESSIONAL has actual knowledge will be given to CONTRACTOR. Defective Work may be rejected, corrected or accepted as provided in this Article 13.

13.04 Uncovering Work

A. If any Work (or the work of others at the Site) is covered contrary to the written request of DESIGN PROFESSIONAL or CITY's Representative, it must, if requested by CITY's

Representative, be uncovered for DESIGN PROFESSIONAL's or CITY's Representative's observation and replaced at CONTRACTOR's expense.

B. If CITY considers it necessary or advisable that covered Work be observed by DESIGN PROFESSIONAL or CITY's Representative or be inspected or tested by others, CONTRACTOR, at CITY's request, shall uncover, expose or otherwise make available for observation, inspection or testing as may be required, that portion of the Work in question, furnishing all necessary labor, material and equipment. If it is found that such Work is defective, CONTRACTOR shall pay all costs, losses and damages (including but not limited to all fees and charges of engineers, architects, attorneys, and other professionals and all court or arbitration or other dispute resolution costs) caused by, arising out of or resulting from such uncovering, exposure, observation, inspection and testing and of satisfactory replacement or reconstruction (including but not limited to all costs of repair or replacement of work of others); and CITY shall be entitled to an appropriate decrease in the Contract Price. If the parties are unable to agree as to the amount thereof, CITY may make a Claim therefore as provided in Article 16. If, however, such Work is not found to be defective, CONTRACTOR shall be allowed an increase in the Contract Price or an extension of the Contract Times (or Milestones), or both, directly attributable to such uncovering, exposure, observation, inspection, testing, replacement and reconstruction. If the parties are unable to agree as to the amount or extent thereof, CONTRACTOR may make a Claim therefore as provided in Article 16.

13.05 CITY May Stop the Work

A. If the Work is defective, or CONTRACTOR fails to supply sufficient skilled workers or suitable materials or equipment, or fails to furnish or perform the Work in such a way that the completed Work will conform to the Contract Documents, CITY may order CONTRACTOR to stop the Work, or any portion thereof, until the cause for such order has been eliminated; however, this right of CITY to stop the Work shall not give rise to any duty on the part of CITY to exercise this right for the benefit of CONTRACTOR, any Subcontractor, Supplier, other individual or entity or any surety or employee or agent of any of them.

13.06 Correction or Removal of Defective Work

A. If required by CITY, CONTRACTOR shall promptly, as directed, either correct all defective Work, whether or not fabricated, installed or completed, or, if the Work has been rejected by either DESIGN PROFESSIONAL or CITY's Representative, remove it and replace it with Work that is not defective. CONTRACTOR shall pay all costs, losses and damages (including but not limited to all fees and charges of engineers, architects, attorneys, and other professionals and all court or arbitration or other dispute resolution costs) caused by or resulting from such correction or removal (including but not limited to all costs of repair or replacement of work of others).

13.07 Correction Period

A. If within one (1) year after the date of Achievement of Full Operation, or such longer period of time as may be prescribed by Laws or Regulations, by the terms of any applicable special guarantee required by the Contract Documents, or by any specific provision of the Contract Documents, any Work is found to be defective, or if the repair of any damages to the land or areas made available for CONTRACTOR's use by CITY or permitted by Laws and Regulations as contemplated in Paragraph 6.10 is found to be defective, CONTRACTOR shall promptly, without cost to CITY and in accordance with CITY's written instructions:

1. correct the repair of damages to such land or areas; or

2. correct such defective Work, or if it has been rejected by CITY, remove it from the Site and replace it with Work that is not defective; and

3. satisfactorily correct or remove and replace any damage to other Work or to the work of others or damage to other lands or areas resulting therefrom. If CONTRACTOR does not promptly comply with the terms of such instructions, or in the event of an emergency where delay by CONTRACTOR would cause serious risk of loss or damage, CITY may have the

defective Work corrected or the rejected Work removed and replaced, and all costs, losses and damages (including but not limited to all fees and charges of engineers, architects, attorneys, and other professionals and all court or arbitration or other dispute resolution costs) caused by or resulting from such removal and replacement (including but not limited to all costs of repair or replacement of work of others) will be paid by CONTRACTOR.

B. In special circumstances where a particular item of equipment is placed in continuous service before Achievement of Full Operation of all the Work, the correction period for that item may start to run from an earlier date if so provided in the Specifications or by Written Amendment.

C. Where defective Work (and damage to other Work resulting therefrom) has been corrected or removed and replaced under this Paragraph 13.07, the correction period hereunder with respect to such Work will be extended for an additional period of one (1) year, or such longer period of time as may be prescribed within Paragraph 13.07 A, after such correction or removal and replacement has been satisfactorily completed.

D. CONTRACTOR's obligations under this Paragraph 13.07 are in addition to any other obligation or warranty. The provisions of this Paragraph 13.07 shall not be construed as a substitute for or waiver of the provisions of any applicable statute of limitation or repose.

13.08 Acceptance of Defective Work

A. If, instead of requiring correction or removal and replacement of defective Work, CITY prefers to accept it, CITY may do so. CONTRACTOR shall pay all costs, losses and damages (including but not limited to all fees and charges of engineers, architects, attorneys, and other professionals and all court or arbitration or other dispute resolution costs) attributable to CITY's evaluation of and determination to accept such defective Work and shall pay OWNER for the diminished value of the Work. If any such acceptance occurs prior to DESIGN PROFESSIONAL's recommendation of final payment, a Change Order will be issued incorporating the necessary revisions into the Contract Documents with respect to the Work and, due to the diminished value of the Work, CITY shall be entitled to an appropriate decrease in the Contract Price. If the parties are unable to agree as to the amount thereof, CITY may make a Claim therefore as provided in Article 16. If the acceptance of defective Work occurs after such recommendation, an appropriate amount shall be paid by CONTRACTOR to CITY.

13.09 CITY May Correct Defective Work

A. If CONTRACTOR fails within a reasonable time after written notice from DESIGN PROFESSIONAL or CITY's Representative to correct defective Work or to remove and replace rejected Work as required by CITY in accordance with Paragraph 13.06, or if CONTRACTOR fails to perform the Work in accordance with the Contract Documents, or if CONTRACTOR fails to comply with any other provision of the Contract Documents, CITY may, after seven (7) days written notice to CONTRACTOR, correct and remedy any such deficiency.

B. CITY shall proceed expeditiously when exercising the rights and remedies under this Paragraph 13.09. In connection with such corrective and remedial action, CITY may exclude CONTRACTOR from all or part of the Site; take possession of all or part of the Work and suspend CONTRACTOR's services related thereto; take possession of CONTRACTOR's tools, appliances, construction equipment and machinery at the Site; and incorporate into the Work all materials and equipment stored at the Site or for which CITY has paid CONTRACTOR but which are stored elsewhere. CONTRACTOR shall allow CITY, CITY's Representative, agents and employees, CITY's other contractors, DESIGN PROFESSIONAL and Consultants access to the Site to enable CITY to exercise the rights and remedies under this Paragraph 13.09.

C. All costs, losses and damages (including but not limited to all fees and charges of engineers, architects, attorneys, and other professionals and all court or arbitration or other dispute resolution costs) incurred or sustained by CITY in exercising such rights and remedies will be charged against CONTRACTOR and a Change Order will be issued incorporating the necessary revisions into the Contract Documents with respect to the Work; and CITY shall be

entitled to an appropriate decrease in the Contract Price. If CITY and CONTRACTOR are unable to agree as to the amount thereof, CITY may make a Claim therefore as provided in Article 16. Such Claims for costs, losses and damages will include but not be limited to all costs of repair or replacement of work of others destroyed or damaged by correction, removal and replacement of CONTRACTOR's defective or rejected Work.

D. CONTRACTOR shall not be allowed an extension of the Contract Times (or Milestones) because of any delay in the performance of the Work attributable to the exercise by CITY of CITY's rights and remedies under Paragraphs 13.06 and 13.09.

ARTICLE 14 PAYMENTS TO CONTRACTOR AND COMPLETION

14.01 Schedule of Values

A. 01290.02 Schedule of Values established as provided in Article 2 will serve as the basis for progress payments and will be incorporated into form 01290.01 Application for Payment acceptable to DESIGN PROFESSIONAL and CITY. Progress payments for Unit Price Work will be based on the number of units completed.

14.02 Application for Progress Payments

A. Application for Payment

1. At least twenty (20) days before the date stipulated in the Supplementary Conditions for each progress payment (but not more often than once a month), CONTRACTOR shall submit to DESIGN PROFESSIONAL for review an Application for Payment filled out and signed by CONTRACTOR covering the Work completed as of the date of the Application and accompanied by such supporting documentation as is required by the Contract Documents. If payment is requested on the basis of materials and equipment not incorporated into the Work but delivered and suitably stored at the Site or at another location agreed to in writing, the Application for Payment shall also be accompanied by a bill of sale, paid invoice or other documentation warranting that CITY has received the materials and equipment free and clear of all Liens and evidence that the materials and equipment are covered by appropriate property insurance and other arrangements to protect CITY'''s interest therein, all of which will be subject to CITY's approval.

2. Beginning with the second Application for Payment, each Application shall include:

a. an affidavit of CONTRACTOR stating that all previous progress payments received for the Work have been applied to discharge CONTRACTOR's legitimate obligations associated with prior Applications for Payment, and

b. a copy of the most recent 00485.01 M/WBE Monthly Utilization Report CONTRACTOR has submitted to the CITY's Human Relations Department.

c. a copy of the most recent 00485.02 Project Workforce Monthly Report and 00485.03 Company-Wide Workforce Monthly Report CONTRACTOR has submitted to the OWNER's Human Relations Department.

d. an update to the approved schedule pursuant to paragraphs 6.04 and 6.05.

e. any submission to the City pursuant to this Paragraph shall contain the following statement:

> I certify under penalty of law that the document and all attachments were prepared under my direction or supervision in accordance with a system designed to assure that qualified personnel properly gathered and evaluated the information submitted, and that the information submitted is, to the best of my knowledge and belief, true, accurate, and complete. I am aware that there are

significant penalties for submitting false information, including the possibility of fine and imprisonment for knowing violations.

3. The amount of retainage with respect to progress payments will be stated in the Supplementary Conditions.

B. Review of Applications

1. DESIGN PROFESSIONAL will, within ten (10) days after receipt of each Application for Payment, either indicate in writing a recommendation of payment and present the Application to CITY or return the Application to CONTRACTOR indicating in writing DESIGN PROFESSIONAL's reasons for refusing to recommend payment. In the latter case, CONTRACTOR shall make the necessary corrections and resubmit the Application.

a. After presentation of the Application for Payment to CITY, and if CITY's Representative agrees with DESIGN PROFESSIONAL's recommendation, the amount recommended will (subject to the provisions of Paragraph 14.02 B.4) become due and will be paid by CITY to CONTRACTOR, subject to the provisions of Laws or Regulations.

b. No payment shall be approved until the CONTRACTOR has submitted with the Application accompanying documentation as required by the Contract Documents, including, but not limited to, the documentation required by paragraphs 6.04 and 6.05.

2. DESIGN PROFESSIONAL's recommendation of any payment requested in an Application for Payment will constitute a representation by DESIGN PROFESSIONAL to CITY, based on DESIGN PROFESSIONAL's observations of the executed Work as an experienced and qualified DESIGN PROFESSIONAL and on DESIGN PROFESSIONAL's review of the Application for Payment and the accompanying data and schedules, that to the best of DESIGN PROFESSIONAL's knowledge, information and belief:

a. the Work has progressed to the point indicated;

b. the quality of the Work is generally in accordance with the Contract Documents (subject to an evaluation of the Work as a functioning whole prior to or upon Achievement of Full Operation, to the results of any subsequent tests called for in the Contract Documents, to a final determination of quantities and classifications for Unit Price Work under Paragraph 9.06, and to any other qualifications stated in the recommendation); and

c. the conditions precedent to CONTRACTOR being entitled to such payment appear to have been fulfilled in so far as it is DESIGN PROFESSIONAL's responsibility to observe the Work.

3. DESIGN PROFESSIONAL's recommendation of any payment, including final payment, shall not mean that DESIGN PROFESSIONAL is responsible for CONTRACTOR's means, methods, techniques, sequence or procedures of construction, safety precautions and programs incident thereto, or any failure of CONTRACTOR to comply with Laws or Regulations applicable to the furnishing or performance of Work.

4. DESIGN PROFESSIONAL may refuse to recommend the whole or any part of any payment if, in DESIGN PROFESSIONAL's opinion, it would be incorrect to make the representations to CITY referred to in Paragraph 14.02 B.2. DESIGN PROFESSIONAL may also refuse to recommend any such payment or, because of subsequently discovered evidence or the results of subsequent inspections or tests, nullify any such payment previously recommended, to such extent as may be necessary in DESIGN PROFESSIONAL's opinion to protect CITY from loss because:

a. the Work is defective, or completed Work has been damaged requiring correction or replacement;

b. the Contract Price has been reduced by Written Amendment or Change Orders;

c. CITY has been required to correct defective Work or complete Work in accordance with Paragraph 13.09; or

d. DESIGN PROFESSIONAL has actual knowledge of the occurrence of any of the events enumerated in Paragraph 15.02.

C. Reduction in Payment

1. CITY may refuse to make payment of the full amount recommended by DESIGN PROFESSIONAL because:

a. Claims have been made by third parties against CITY on account of CONTRACTOR's performance or furnishing of the Work; or

b. Claims have been made by CITY against CONTRACTOR in connection with the Work, except where CONTRACTOR has delivered a specific Bond satisfactory to CITY to secure the satisfaction and discharge of such Claims;

c. there are other items entitling CITY to a set-off against the amount recommended; or

d. CITY has actual knowledge of the occurrence of any of the events enumerated in Paragraphs 14.02 B.4.a through c or 15.02 A.1 through 4; but CITY must give CONTRACTOR written notice (with a copy to DESIGN PROFESSIONAL) stating the reasons for such action and promptly pay CONTRACTOR the amount so withheld, or any adjustment thereto agreed to by CITY and CONTRACTOR, when CONTRACTOR corrects to CITY's satisfaction the reasons for such action; or

e. CITY has made a different determination of the actual quantities and classifications of Unit Price Work.

14.03 CONTRACTOR's Warranty of Title

A. CONTRACTOR warrants and guarantees that title to all Work, materials and equipment covered by any Application for Payment, whether incorporated into the Project or not, will pass to CITY no later than the time of payment, free and clear of all Liens.

14.04 Substantial Completion or Achievement of Full Operation

A. When CONTRACTOR considers the entire Work ready for its intended use CONTRACTOR shall notify CITY and DESIGN PROFESSIONAL in writing that the entire Work is substantially complete (except for items specifically listed by CONTRACTOR as incomplete) and request that CITY issue a certificate of Substantial Completion or Achievement of Full Operation. Within a reasonable time thereafter, CITY, together with CONTRACTOR and DESIGN PROFESSIONAL, shall make an inspection of the Work to determine the status of completion. If DESIGN PROFESSIONAL does not consider the Work substantially complete, DESIGN PROFESSIONAL will notify CONTRACTOR and CITY in writing giving the reasons therefore. If DESIGN PROFESSIONAL considers the Work substantially complete, DESIGN PROFESSIONAL will prepare and deliver to CITY a recommended certificate of Substantial Completion or Achievement of Full Operation that shall establish the date of Substantial Completion or Achievement of Full Operation. There shall be attached to the certificate a tentative list of items to be completed or corrected before final payment. CITY shall have seven (7) days after receipt of the recommended certificate during which to make written objection to DESIGN PROFESSIONAL as to any provisions of the certificate or attached list. At the time of delivery of the recommended certificate of Substantial Completion or Achievement of Full Operation, DESIGN PROFESSIONAL will deliver to CITY and CONTRACTOR a written recommendation as to division of responsibilities pending final payment between CITY and CONTRACTOR with respect to security, operation, safety, protection of the Work, maintenance, heat, utilities, insurance and warranties and guarantees.

B. CITY shall have the right to exclude CONTRACTOR from the Site after the date of Substantial Completion or Achievement of Full Operation, but CITY shall allow CONTRACTOR reasonable access to complete or correct items on the tentative list.

14.05 Partial Utilization

A. Use by CITY at CITY's option of any substantially completed part of the Work which has specifically been identified in the Contract Documents, or which CITY, DESIGN PROFESSIONAL and CONTRACTOR agree constitutes a separately functioning and usable part of the Work that can be used by CITY for its intended purpose without significant interference with CONTRACTOR's performance of the remainder of the Work, may be accomplished prior to Substantial Completion of all the Work subject to the following:

1. CITY at any time may request CONTRACTOR in writing to permit CITY to use any such part of the Work which CITY believes to be ready for its intended use and substantially complete. If CONTRACTOR agrees that such part of the Work is substantially complete, CONTRACTOR will certify to CITY and DESIGN PROFESSIONAL that such part of the Work is substantially complete and request CITY to issue a certificate of Substantial Completion for that part of the Work. CONTRACTOR at any time may notify CITY and DESIGN PROFESSIONAL in writing that CONTRACTOR considers any such part of the Work ready for its intended use and substantially complete and request CITY to issue a certificate of Substantial Completion for that part of the Work. Within a reasonable time after either such request, CITY, together with CONTRACTOR and DESIGN PROFESSIONAL, shall make an inspection of that part of the Work to determine its status of completion. If DESIGN PROFESSIONAL does not consider that part of the Work to be substantially complete, DESIGN PROFESSIONAL will notify CITY and CONTRACTOR in writing, giving the reasons therefore. If DESIGN PROFESSIONAL considers that part of the Work to be substantially complete, the provisions of Paragraph 14.04 will apply with respect to certification of Substantial Completion of that part of the Work and the division of responsibility in respect thereof and access thereto.

2. No occupancy or separate operation of part of the Work will be accomplished prior to compliance with the requirements of Paragraph 5.09 with respect to property insurance.

14.06 Final Inspection

A. Upon written notice from CONTRACTOR that the entire Work or an agreed portion thereof is complete, DESIGN PROFESSIONAL will make a final inspection with CITY and CONTRACTOR and will notify CONTRACTOR in writing of all particulars in which this inspection reveals that the Work is incomplete or defective. CONTRACTOR shall immediately take such measures as are necessary to complete such Work or remedy such deficiencies.

14.07 Final Payment

A. Application for Payment

1. After CONTRACTOR has completed all corrections required by Paragraph 14.06 to the satisfaction of DESIGN PROFESSIONAL and CITY's Representative and delivered in accordance with the Contract Documents all maintenance and operating instructions, schedules, guarantees, Bonds, certificates or other evidence of insurance required by Paragraph 5.04, certificates of inspection, marked-up record documents (as provided in Paragraph 6.13) and other documents, CONTRACTOR may make application for final payment following the procedure for progress payments.

2. The final Application for Payment shall be accompanied (except as previously delivered) by:

a. all documentation required by the Contract Documents, including but not limited to the evidence of insurance required by Subparagraph 5.04 B.7; and

b. 01290.14 “Contractor Affidavit for Final Payment” from CONTRACTOR and 01290.15 “Subcontractor Affidavit for Final Payment” from all Subcontractors, regardless of tier.

B. Review of Application and Acceptance

1. If, on the basis of DESIGN PROFESSIONAL’s and CITY’s Representative’s observation of the Work during construction and final inspection, and DESIGN PROFESSIONAL’s and CITY’s Representative’s review of the final Application for Payment and accompanying documentation as required by the Contract Documents, DESIGN PROFESSIONAL and CITY’s Representative are satisfied that the Work has been completed and CONTRACTOR’s other obligations under the Contract Documents have been fulfilled, DESIGN PROFESSIONAL will, within ten (10) days after receipt of the final Application for Payment, indicate in writing DESIGN PROFESSIONAL’s and CITY’s Representative’s recommendation of payment and present the Application to CITY for payment. At the same time DESIGN PROFESSIONAL will also give written notice to CITY and CONTRACTOR that the Work is acceptable subject to the provisions of Paragraph 14.09.

2. Otherwise, DESIGN PROFESSIONAL will return the Application to CONTRACTOR, indicating in writing the reasons for refusing to recommend final payment, in which case CONTRACTOR shall make the necessary corrections and resubmit the Application to DESIGN PROFESSIONAL. After the presentation to CITY of the Application and accompanying documentation, in appropriate form and substance, including applicable federal and state prevailing wage provisions, and with DESIGN PROFESSIONAL’s recommendation and notice of acceptability, the amount recommended by DESIGN PROFESSIONAL will become due and will be paid by CITY to CONTRACTOR in accordance with Laws and Regulations.

14.08 Final Completion Delayed

A. If, through no fault of CONTRACTOR, final completion of the Work is significantly delayed and if DESIGN PROFESSIONAL so recommends and CITY concurs, CITY shall, upon receipt of CONTRACTOR’s final Application for Payment and recommendation of DESIGN PROFESSIONAL, and without terminating the Contract, make payment of the balance due for that portion of the Work fully completed and accepted. If the remaining balance to be held by CITY for Work not fully completed or corrected is less than the retainage stipulated in the Supplementary Conditions, and if Bonds have been furnished as required in Paragraph 5.01, the written consent of the surety to the payment of the balance due for that portion of the Work fully completed and accepted shall be submitted by CONTRACTOR to DESIGN PROFESSIONAL with the Application for Payment. Payment shall be made under the terms and conditions governing final payment, except that it shall not constitute a waiver of Claims.

14.09 Waiver of Claims

A. The making and acceptance of final payment will constitute:

1. a waiver of all claims by CITY against CONTRACTOR, except claims previously made in writing and still unsettled, or claims arising from defective Work appearing after final inspection pursuant to Paragraph 14.06, from failure to comply with the Contract Documents or the terms of any special guarantees specified therein, or from CONTRACTOR’s continuing obligations under the Contract Documents; and

2. a waiver of all Claims by CONTRACTOR against CITY other than those previously made in writing pursuant to Paragraphs 16.02 and 16.03 and still unsettled.

14.10 Completion of Work by CITY

B. If CITY must complete the Work, all costs and charges incurred by CITY, together with the cost of completing the Work under the Contract, will be deducted from any monies due or which may become due CONTRACTOR. If such expense exceeds the sum which would have been

payable under the Contract, then CONTRACTOR and the surety shall be liable and shall pay to CITY the amount of such excess.

ARTICLE 15 SUSPENSION OF WORK AND TERMINATION

15.01 CITY May Suspend Work

A. Notwithstanding any other provision of this Contract, at any time and without cause, and at is sole and absolute discretion, CITY, may suspend the Work or any portion of the Work by written notice to CONTRACTOR, which will initially fix the date on which Work will be resumed. CONTRACTOR shall resume the Work on the date so fixed in the notice unless the date is changed by a subsequent written notice from CITY. CONTRACTOR may be allowed an adjustment in the Contract Price or an extension of the Contract Times, or both, directly attributable to any suspension if CONTRACTOR makes a Claim therefore in accordance with Article 16.

B. CONTRACTOR will not be allowed an adjustment in the Contract Price or an extension of the Contract Times if CITY suspends the Work because CONTRACTOR's acts or omissions create or cause an emergency that CITY believes affects the safety or protection of persons, the Work, or property at the Site or adjacent thereto. CITY may order CONTRACTOR to stop the Work, or any portion thereof, until the cause for such order has been adequately addressed by CONTRACTOR; however, this right of CITY to stop the Work shall not give rise to any duty on the part of CITY to exercise this right for the benefit of CONTRACTOR, any Subcontractor, Supplier, other individual or entity or any surety or employee or agent of any of them.

15.02 CITY May Terminate for Default

A. CONTRACTOR may be deemed in default and CITY may terminate the services of CONTRACTOR upon the occurrence of any one or more of the following events:

1. CONTRACTOR fails to perform the Work in accordance with the Contract Documents (including, but not limited to, failure to supply sufficient skilled workers or suitable materials or equipment or failure to adhere to the progress schedule established under Paragraph 2.06 and 2.07 as adjusted from time to time pursuant to Paragraphs 6.04, 6.05, 12.02 and 12.03);

2. CONTRACTOR abandons the Work or declares its intention to abandon the Work;

3. CONTRACTOR assigns or attempts to assign its rights or obligations under this Contract or any part thereof to any third party without the prior written consent of CITY;

4. CONTRACTOR fails to make prompt payment duly owing to any subcontractor for Work completed in accordance to the Contract Documents or material supplier for materials delivered for incorporation into the Work within thirty (30) calendar days after payment was due;

5. CONTRACTOR fails to achieve the required dates of substantial and achievement of full operation;

6. CONTRACTOR disregards Laws or, Regulations, or Decrees of any public body or court of law having jurisdiction;

7. CONTRACTOR disregards the authority of DESIGN PROFESSIONAL or OWNER; or

8. CONTRACTOR otherwise violates in any substantial way any provisions of the Contract Documents.

B. CITY may, after giving CONTRACTOR and the surety seven (7) days written notice and to the extent permitted by Laws or Regulations, terminate the services of CONTRACTOR, exclude CONTRACTOR from the Site and take possession of the Work and of all CONTRACTOR's tools, appliances, construction equipment and machinery at the Site and use the same to the full extent they could be used by CONTRACTOR (without liability to CONTRACTOR for trespass or conversion), incorporate into the Work all materials and equipment stored at the Site or for which

CITY has paid CONTRACTOR but which are stored elsewhere, and finish the Work as CITY may deem expedient. In such case, CONTRACTOR shall not be entitled to receive any further payment until the Work is finished. If the unpaid balance of the Contract Price exceeds all costs, losses and damages (including but not limited to all fees and charges of engineers, architects, attorneys, and other professionals and all court or arbitration or other dispute resolution costs) sustained by CITY arising out of or resulting from completing the Work, such excess may be paid to CONTRACTOR. If such costs, losses and damages exceed such unpaid balance, CONTRACTOR shall pay the difference to CITY within fourteen (14) calendar days of CITY'S demand for payment. When exercising any rights or remedies under this Paragraph CITY shall not be required to competitively bid this work unless required by law.

C. Where CONTRACTOR's services have been so terminated by CITY, the termination will not affect any rights or remedies of CITY against CONTRACTOR then existing or which may thereafter accrue. Any retention or payment of moneys due CONTRACTOR by CITY will not release CONTRACTOR from liability.

D. If, after a default termination, it is determined that the CONTRACTOR was not in default, the rights and obligations of the parties shall be the same as if the termination had been issued for the convenience of the CITY. The CITY shall then be liable to CONTRACTOR for only those costs enumerated in paragraph 15.03.

15.03 CITY May Terminate for Convenience

A. Notwithstanding any other provision of this Contract, upon seven (7) calendar days written notice to CONTRACTOR, CITY may, at its sole and absolute discretion, without cause and without prejudice to any other right or remedy of CITY, elect to terminate the Contract. In such case, CONTRACTOR shall, with thirty (30) calendar days of receiving notice of termination under this paragraph, submit to CITY its statement of costs and expenses and shall be paid:

1. for completed and acceptable Work executed in accordance with the Contract Documents prior to the effective date of termination, including fair and reasonable sums for overhead and profit on such Work;

2. for expenses sustained prior to the effective date of termination in performing services and furnishing labor, materials or equipment as required by the Contract Documents in connection with uncompleted Work, plus fair and reasonable sums for overhead and profit on such expenses;

3. for all costs, losses and damages incurred in settlement of terminated contracts with Subcontractors, Suppliers and others; and

4. for reasonable expenses directly attributable to termination if approved in advance by CITY.

B. CONTRACTOR shall not be paid on account of loss of anticipated profits or revenue or other economic loss arising out of or resulting from such termination.

C. CONTRACTOR waives any costs not submitted to CITY pursuant to paragraph 15.03.A.

D. CITY shall, within thirty (30) calendar days after receipt of CONTRACTOR's statement, pay CONTRACTOR all amounts it determines are properly determined.

ARTICLE 16 CLAIMS AND DISPUTES

16.01 Definition

A. A Claim is a demand or assertion by the CONTRACTOR seeking, as a matter of right, the adjustment of Contract price and/or times with respect to the terms of the Contract.

16.02 Written Notice and Burden of Proof

A. Claims must be made by written notice pursuant to Paragraph 17.01. The written notice shall clearly indicate that the CONTRACTOR is making a claim. The responsibility to substantiate Claims shall rest with the CONTRACTOR. No Claim may be made under this Contract except as provided in this Article.

B. Certification of Claim: The written notice of Claim shall include the following statement signed by the CONTRACTOR's representative:

> I certify under penalty of law that the document and all attachments were prepared under my direction or supervision in accordance with a system designed to assure that qualified personnel properly gathered and evaluated the information submitted, and that the information submitted is, to the best of my knowledge and belief, true, accurate, and complete. I am aware that there are significant penalties for submitting false information, including the possibility of fine and imprisonment for knowing violations.

Strict compliance with this paragraph shall be a condition precedent to the creation, existence or validity of any Claim.

16.03 Time Limits on Claims

A. The CONTRACTOR must give notice to the CITY within fourteen (14) calendar days after occurrence of the event giving rise to the Claim advising the CITY that CONTRACTOR intends to file a claim. After the fourteen (14) day period for making Claims has expired, the Claim shall be considered waived.

B. The CONTRACTOR shall submit the Claim to the CITY's Representative.

16.04 Continuing Contract Performance

A. Pending final resolution of a Claim, unless otherwise agreed in writing, the CONTRACTOR shall proceed diligently with performance of the Work and the CITY shall continue to make payments in accordance with the Contract Documents. The CITY may, but is not obligated to, notify the Surety of the nature and amount of the Claim.

16.05 Injury or Damage to Person or Property

A. If either party to the Contract suffers injury or damage to person or property because of an act or omission of the other party, of any of the other party's employees or agents, or of others for whose acts that party is legally liable, written notice of the injury or damage, whether or not insured, shall be given to the other party within a reasonable time not exceeding thirty (30) days after first observance. The notice shall provide sufficient detail to enable the other party to investigate the matter.

16.06 Initial Resolution of Claims and Disputes

A. After the CONTRACTOR has submitted the Claim to the CITY's Representative, the CITY'S Representative and CONTRACTOR'S Representative shall conduct a settlement conference within fourteen (14) calendar days from the date of receipt of the Claim. If the Claim is not settled within seven (7) calendar days following the date of the settlement conference, the CITY'S Representative and the CONTRACTOR's Representative shall state, in writing, their respective position as to the matters in dispute.

B. The CITY'S and CONTRACTOR'S statement of positions shall state all known factual grounds for each party's position. If the dispute remains unresolved at the end of the seven (7) calendar days from submission of the parties' written position statements, the CONTRACTOR shall have the right to proceed with the pursuit of Claims pursuant to paragraph 16.07.

C. If a Claim has been resolved, the OWNER will prepare or obtain appropriate documentation.

16.07 Final Resolution of Claims and Disputes

A. All administrative procedures set forth in this contract must first be exhausted before suit is filed.

B. If the CITY'S Representative and the CONTRACTOR'S Representative are unable to resolve the dispute pursuant to 16.06, the parties must submit their statements of position to the Director, who shall review the Claim and make a decision within fourteen (14) calendar days.

C. Absent fraud, gross mistake or bad faith, the Director's decision shall be final and binding on CITY and CONTRACTOR within fourteen (14) calendar days after issuance. The CONTRACTOR shall give written notice to the CITY stating its intent to submit its Claim to a court of law pursuant to paragraph 17.05.A. within thirty (30) calendar days after notice of Director's decision.

D. The time frames for the Director's decision and for CONTRACTOR'S written notice of intent may be tolled by participation in voluntary mediation. Mediator selection and the procedures to be employed in voluntary mediation shall be mutually acceptable to the parties. Costs of the mediator shall be shared equally among the parties participating in the mediation. In no event shall any time frame be tolled more than 30 days for mediation. However, mediation may be employed at any time at the discretion and mutual agreement of the parties.

E. If the dispute is not resolved during voluntary mediation, The CONTRACTOR agrees that it will file no suit based on facts or evidentiary materials that were not presented for consideration to the CITY during the mediation process or of which the CONTRACTOR had knowledge and failed to present during the administrative procedures.

ARTICLE 17 MISCELLANEOUS

17.01 Giving Notice

A. Whenever any provision of the Contract Documents requires the giving of written notice, it will be given by personal delivery, by registered or certified mail, postage prepaid, to the last business address known to the giver of the notice or by confirmed electronic facsimile transmission. Notice is effective on the date of personal delivery, deposit of registered or certified mail, postage prepaid, or confirmed electronic facsimile transmission.

17.02 Computation of Times

A. When any period of time is referred to in the Contract Documents by days, it will be computed to exclude the first and include the last calendar day of such period. If the last day of such period falls on a Saturday or Sunday or on a day made a legal holiday by the law of the applicable jurisdiction, such day will be omitted from the computation.

17.03 Cumulative Remedies

A. The duties and obligations imposed by these General Conditions and the rights and remedies available hereunder to the parties hereto, and, in particular but without limitation, the warranties, guarantees and obligations imposed upon CONTRACTOR and all of the rights and remedies available to CITY and DESIGN PROFESSIONAL hereunder are in addition to, and are not to be construed in any way as a limitation of, any rights and remedies available to any or all of them which are otherwise imposed or available by Laws or Regulations, by special warranty or guarantee or by other provisions of the Contract Documents, and the provisions of this Paragraph will be as effective as if repeated specifically in the Contract Documents in connection with each particular duty, obligation, right and remedy to which they apply.

17.04 Survival of Obligations

A. All representations, indemnifications, warranties, and guarantees made in, required by, or given in accordance with the Contract Documents, as well as all continuing obligations indicated

in the Contract Documents will survive final payment, completion, and acceptance of the Work or termination or completion of the Contract.

17.05 Controlling Law

A. This Contract shall be construed and governed in accordance with the laws of the State of Missouri without giving effect to Missouri's choice of law provisions. The CITY and CONTRACTOR: (1) shall submit exclusively to the jurisdiction of the state and federal courts located in Jackson County, Missouri and no other; (2) shall waive any and all objections to jurisdiction and venue; and (3) shall not raise forum non conveniens as an objection to the location of any litigation.

OVERFLOW CONTROL PLAN CONSENT DECREE SUPPLEMENTARY CONDITIONS

Project/Contract Number: 81000691/1545

Project Title: I/I Reduction: Line Creek Rock Creek Areas 3 & 4

These Supplementary Conditions amend or supplement the General Conditions of the Construction Contract and other provisions of the Contract Documents as indicated below. All provisions that are not so amended or supplemented remain in full force and effect.

SC-2.04 A. Article 2, Paragraph 2.04, Copies of Documents, is amended by deleting Paragraph 2.04 A and replacing it with the following:

A. CITY shall furnish to CONTRACTOR one executed copy of the Project Manual including all Addenda.

SC-4.02 Article 4, Paragraph 4.02, Subsurface and Physical Conditions; Subparagraphs A and B are supplemented as follows:

In the preparation of the Contract Documents, no reports of explorations and tests of subsurface conditions at or contiguous to the Site of the Work were utilized.

In the preparation of the Contract Documents, no drawings of physical conditions in or relating to existing surface or subsurface structures which are at or contiguous to the Site of the Work were utilized.

SC-4.06 Article 4, Paragraph 4.06, Asbestos, Lead-Based Paint, PCBs, Petroleum, Hazardous Waste or Radioactive Material, Subparagraphs A and B are supplemented as follows:

In the preparation of the Contract Documents, no reports of explorations and tests of any Hazardous Environmental Condition(s) at the Site of the Work were utilized.

SC-5.01 A. Article 5, Paragraph 5.01, Performance, Payment and Other Bonds, Subparagraph A, second sentence, is revised as follows:

These Bonds shall remain in effect at least until **three (3) years** after the date when Achievement of Full Operation (AFO) is granted by the City, except as provided otherwise by Laws or Regulations or by the Contract Documents.

SC-5.03 A. Article 5, Paragraph 5.03 Certificates of Insurance, Subparagraph A is amended by adding the following Subparagraph 1:

1. CONTRACTOR shall obtain evidence that all Subcontractors have in force the required coverage in the amounts required by these Contract Documents, and evidence that each is current on its unemployment insurance payments before Subcontractors begin Work at the Site. CONTRACTOR shall retain such evidence in its files and make available to CITY within ten (10) days after written request.

SC-5.04 B.1. Article 5, Paragraph 5.04, CONTRACTOR's Liability Insurance, Subparagraph B.1 is amended as follows:

With respect to insurance required by Paragraphs 5.04 A.3 through 5.04 A.5, the following additional individuals or entities shall be listed as additional insureds:

- Burns and McDonnell Engineering Company, Inc.
- Olsson Associates, Inc.
- CH2M Hill Engineers, Inc.

SC-6.06 A.1 Article 6, Paragraph 6.06 Substitutes and "Or-Equal" Items, Paragraph A is amended by adding the following at the end of Paragraph A.1:

Proposed "or-equal" items must be submitted to CITY at least eleven (11) days prior to Bid date at the following address:

Water Services Department
4800 East 63rd Street
Kansas City, Missouri 64130
Attn: Nicki Chestnut, Project Manager

Only Bidders may submit proposed "or-equal" items and such items must require no change in related Work. Acceptance by CITY of any proposed "or-equal" items will be made by Addendum only.

SC-6.06 A.2. Article 6, Paragraph 6.06 Substitutes and “Or-Equal” Items, Paragraph A is amended by adding the following at the end of Paragraph A.2:

Proposed substitute items must be submitted to CITY's Representative not later than fourteen (14) days prior to the time the item is to be incorporated into the Work. Only CONTRACTOR may submit proposed substitute items, and such items must be submitted to CITY's Representative on the standard City form 01630 - Substitution Request. Acceptance by CITY of any proposed substitute item will be made by Change Order.

SC-6.07 J Article 6, Paragraph 6.07, concerning Subcontractors, Suppliers and Others, is supplemented by adding Subparagraph J as follows:

CONTRACTOR shall perform with its own organization Work amounting to not less than 51% of the total Contract Price. “Its own organization” shall be construed to include only workers employed and paid by the CONTRACTOR and equipment owned or rented by the CONTRACTOR, with or without operators. Such term does not include employees or equipment of a subcontractor, assignee, or agent of the CONTRACTOR.

SC-6.09. Article 6, Paragraph 6.09, Permits, Subparagraph A is supplemented as follows:

CONTRACTOR shall secure a permit from the Missouri Highway and Transportation Commission’s District Engineer prior to performing any work in state-controlled Right-of-Way.

CONTRACTOR does not need to obtain and pay for the following construction permits and licenses, which have been paid for by CITY.

SC-6.10. Article 6, Paragraph 6.10, Compliance with Laws and Regulations, is amended by adding the following new Subparagraphs immediately following Subparagraph 6.10 I 2:

a. CONTRACTOR will be required to comply with wage rates as follows:

   County: Clay and Platte

   Work Type: State - Heavy

SC-6.10. Article 6, Paragraph 6.10, Compliance with Laws and Regulations, is amended by adding the following new Subparagraph 6.10 S:

1. “Resident Laborers” means laborers who have been residents of the State of Missouri for at least thirty days and who intend to remain Missouri residents, and residents of Nonrestrictive States.

2. “Nonrestrictive States” means states identified by the Missouri Department of Labor and Industrial Relations Division of Labor Standards that have not enacted state laws restricting Missouri laborers from working on public works projects. A list of Nonrestrictive States can be found on the Division web site at http://www.dolir.mo.gov/ls/index.htm.

3. A period of Excessive Unemployment is declared when the Missouri Department of Labor and Industrial Relations Division of Labor Standards provides notice of such declaration. When in effect, notice will be provided on the Division web site at http://www.dolir.mo.gov/ls/index.htm. It is CONTRACTOR’s obligation to determine whether a period of Excessive Unemployment is in effect when this Contract is let.

4. CONTRACTOR agrees to follow the provisions of Section 290.560 - 290.575 RSMo and agrees that if a period of Excessive Unemployment has been declared at any point during the term of this Contract, it will employ and require all Subcontractors of whatever tier to employ only Resident Laborers for the Work to be performed under this CONTRACT. Provided, however, CONTRACTOR may use laborers who are not Resident Laborers when Resident Laborers are not available or are incapable of performing the particular type of work involved if CONTRACTOR so certifies in writing to CITY and CITY issues a written approval. This provision does not apply to regularly employed nonresident executive, supervisory or technical employees.

SC-6.10. Article 6, Paragraph 6.10, Compliance with Laws and Regulations, is amended by adding the following new Subparagraph 6.10 T:

Contract Information Management System. CONTRACTOR shall comply with CITY’s Contract Information Management System requirements. CONTRACTOR shall use CITY’s Internet web based Contract Information Management System/Project Management Communications Tool provided by CITY and protocols included in that software during the term of this Contract. CONTRACTOR shall maintain user applications to CITY’s provided system for all personnel, subcontractors or suppliers as applicable.

SC-6.11. Article 6, Paragraph 6.11, Taxes, is amended by adding the following sentence to Subparagraph 6.11 B:

A. Tax Compliance. The following subparagraphs apply if the Contract is over $150,000.00.

SC-9.02. Article 9, Paragraph 9.02, Resident Project Representative is amended by adding the following new Subparagraphs immediately following Subparagraph 9.02 A:

B. The Resident Project Representative (RPR) will be DESIGN PROFESSIONAL's representative at the Site, will act as directed by and under the supervision of DESIGN PROFESSIONAL, and will confer with DESIGN PROFESSIONAL regarding RPR's actions.

1. General: RPR's dealings in matters pertaining to the Work in general shall be with DESIGN PROFESSIONAL, the CITY’s Smart Sewer Program Manager, and CONTRACTOR. RPR's dealings with Subcontractors shall only be through or with the full knowledge and approval of CONTRACTOR. RPR shall generally communicate with CITY and CITY’S Smart Sewer Program Manager only with the knowledge of and under the direction of DESIGN PROFESSIONAL.

2. Schedules: Review the progress schedule, schedule of Shop Drawing and Sample submittals, and Schedule of Values prepared by CONTRACTOR and consult with

DESIGN PROFESSIONAL and CITY'S Smart Sewer Program Manager concerning acceptability.

3. Conferences and Meetings: Attend meetings with CONTRACTOR and CITY's Smart Sewer Program Manager, such as preconstruction conferences, progress meetings, job conferences, and other Project-related meetings.

4. Liaison:

   a. Serve as DESIGN PROFESSIONAL's liaison with CONTRACTOR. Working principally through CONTRACTOR's authorized representative or designee, assist in providing information regarding the provisions and intent of the Contract Documents.

   b. Assist DESIGN PROFESSIONAL in serving as CITY's liaison with CONTRACTOR when CONTRACTOR's operations affect CITY's on-Site operations.

   c. Assist in obtaining from CITY additional details or information, when required for proper execution of the Work.

5. Interpretation of Contract Documents: Report to DESIGN PROFESSIONAL when clarifications and interpretations of the Contract Documents are needed and transmit to CONTRACTOR clarifications and interpretations as issued by DESIGN PROFESSIONAL.

6. Shop Drawings and Samples:

   a. Record date of receipt of Samples and CONTRACTOR-approved Shop Drawings when hard copies are furnished at the Site.

   b. Receive Samples which are furnished at the Site by CONTRACTOR, and notify DESIGN PROFESSIONAL of availability of Samples for examination.

   c. Advise DESIGN PROFESSIONAL and CONTRACTOR of the commencement of any portion of the Work requiring a Shop Drawing or Sample submittal for which RPR believes that the submittal has not been approved by DESIGN PROFESSIONAL.

7. Modifications: Consider and evaluate CONTRACTOR's suggestions for modifications in Drawings or Specifications and report such suggestions, together with RPR's recommendations, if any, to DESIGN PROFESSIONAL and CITY'S Smart Sewer Program Manager. Transmit to CONTRACTOR in writing decisions as issued by DESIGN PROFESSIONAL.

8. Review of Work and Rejection of Defective Work:

   a. Conduct on-Site observations of CONTRACTOR's work in progress to assist DESIGN PROFESSIONAL and CITY's Smart Sewer Program Manager in determining if the Work is in general proceeding in accordance with the Contract Documents.

   b. Report to DESIGN PROFESSIONAL and CITY'S Smart Sewer Program Manager whenever RPR believes that any part of CONTRACTOR's work in progress is defective, will not produce a completed Project that conforms generally to the Contract Documents, or will imperil the integrity of the design concept of the completed Project as a functioning whole as indicated in the Contract Documents, or has been damaged, or does not meet the requirements of any inspection, test or approval required to be made; and advise DESIGN PROFESSIONAL and

CITY'S Smart Sewer Program Manager of that part of work in progress that RPR believes should be corrected or rejected or should be uncovered for observation, or requires special testing, inspection or approval. If RPR believes a Notice of Non-conformance should be issued, the RPR will advise the DESIGN PROFESSIONAL and CITY'S Smart Sewer Program Manager in this matter and provide field information as required for the DESIGN PROFESSIONAL and CITY'S Smart Sewer Program Manager to complete and issue a Notice of Non-Conformance to the CONTRACTOR.

9. Inspections, Tests, and System Start-ups:
   a. Verify that tests, equipment, and systems start-ups and operating and maintenance training are conducted in the presence of appropriate CITY's personnel, and that CONTRACTOR maintains adequate records thereof.
   b. Observe, record, and report to DESIGN PROFESSIONAL and CITY'S Smart Sewer Program Manager appropriate details relative to the test procedures and systems start-ups.
10. Records:
   a. Prepare a daily report or keep a diary or log book, recording CONTRACTOR's hours on the Site, Subcontractors present at the Site, weather conditions, data relative to questions of Change Orders, Field Orders, Work Change Directives, or changed conditions, Site visitors, deliveries of equipment or materials, daily activities, decisions, observations in general, and specific observations in more detail as in the case of observing test procedures; and send copies to DESIGN PROFESSIONAL and CITY'S Smart Sewer Program Manager.
   b. Maintain records for use in preparing Project documentation.
11. Reports:
   a. Furnish to DESIGN PROFESSIONAL and CITY'S Smart Sewer Program Manager periodic reports as required of progress of the Work and of CONTRACTOR's compliance with the Progress Schedule and schedule of Shop Drawing and Sample submittals.
   b. Recommend to DESIGN PROFESSIONAL and CITY'S Smart Sewer Program Manager proposed Change Orders, Work Change Directives, and Field Orders. Assist DESIGN PROFESSIONAL as necessary in drafting such documents and obtain backup material from CONTRACTOR.
   c. Immediately notify DESIGN PROFESSIONAL and CITY'S Smart Sewer Program Manager of the occurrence of any Site accidents, emergencies, acts of God endangering the Work, force majeure or delay events, damage to property by fire or other causes, or the discovery of any Constituent of Concern or Hazardous Environmental Condition.
12. Payment Requests: Review applications for payment with CONTRACTOR for compliance with the established procedure for their submission and forward with recommendations to DESIGN PROFESSIONAL, noting particularly the relationship of the payment requested to the Schedule of Values, Work completed, and materials and equipment delivered at the Site but not incorporated in the Work.
13. Certificates, Operation and Maintenance Manuals: During the course of the Work, verify that materials and equipment certificates, operation and maintenance manuals

and other data required by the Contract Documents to be assembled and furnished by CONTRACTOR are applicable to the items actually installed and in accordance with the Contract Documents, and have these documents delivered to DESIGN PROFESSIONAL for review and forwarding to CITY prior to payment for that part of the Work.

14. Completion:

    a. Participate in DESIGN PROFESSIONAL's and CITY'S Smart Sewer Program Manager visits to the Site to determine Substantial Completion, assist in the determination of Substantial Completion and the preparation of a punch list of items to be completed or corrected.

    b. Participate in DESIGN PROFESSIONAL's and CITY'S Smart Sewer Program Manager final visit to the Site to determine completion of the Work, in the company of CITY and CONTRACTOR, and prepare a final punch list of items to be completed and deficiencies to be remedied.

    c. Observe whether all items on the final list have been completed or corrected and make recommendations to DESIGN PROFESSIONAL concerning acceptance and issuance of the notice of acceptability of the work.

C. The RPR shall not:

    1. Authorize any deviation from the Contract Documents or substitution of materials or equipment (including "or-equal" items).

    2. Exceed limitations of DESIGN PROFESSIONAL's authority as set forth in the Contract Documents.

    3. Undertake any of the responsibilities of CONTRACTOR, Subcontractors, or Suppliers.

    4. Advise on, issue directions relative to, or assume control over any aspect of the means, methods, techniques, sequences or procedures of CONTRACTOR's work.

    5. Advise on, issue directions regarding, or assume control over security or safety practices, precautions, and programs in connection with the activities or operations of CITY or CONTRACTOR.

    6. Participate in specialized field or laboratory tests or inspections conducted off-site by others except as specifically authorized by DESIGN PROFESSIONAL.

    7. Accept Shop Drawing or Sample submittals from anyone other than CONTRACTOR.

    8. Authorize CITY to occupy the Project in whole or in part.

SC-9.04 Article 9, Paragraph 9.04, Rejecting Defective Work is amended by adding the following new Subparagraph immediately following Subparagraph 9.04 A:

B. When the work performed by CONTRACTOR deviates from the project's contractual requirements, the Contractor is to be notified by the DESIGN PROFESSIONAL using the Non-Conformance Notice/Defective Work Form. The DESIGN PROFESSIONAL shall complete Part 1 – Identification of the Non-Conformance Notice and/or Defective Work to provide written notice to the CONTRACTOR that the work does not meet the referenced contractual requirements. Upon receipt, CONTRACTOR shall suspend work directly related to the non-conforming work in accordance with Specification

00700 General Conditions, Article 13 – Tests and Inspections; Correction, Removal or Acceptance of Defective Work.

SC-9.08 E. Article 9, Paragraph 9.08, Limitations on DESIGN PROFESSIONAL's Authority and Responsibilities, Subparagraph E is supplemented as follows:

DESIGN PROFESSIONAL's Consultant(s), resident Project representative and assistant(s) to the resident Project representative are the following:

Consultant(s): Olsson Associates, Inc. and CH2M Hill Engineers, Inc.

Resident Project representative: TBD

Assistant(s) to the resident Project representative: TBD

SC-11.01. Article 11, Paragraph 11.01, Change in Contract Price, is amended by adding the following:

F. Escalation: If during the bid review and approval of the contract, the price of material increases, through no fault of the Contractor, the contract price may be equitably adjusted and subject to escalation. Escalation will be based on cost increases without additional profit, overhead or margin, and shall include material costs only that occur between the bid date and within the 90 day period immediately following the Notice to Proceed date. Such price increases shall be documented through third party sources as follows:

1. PVC piping material escalation will be based on the Producer Price Index for Plastic Sewer Pipe (WPU072106038).

Equitable adjustments will be determined by calculating the percentage increase or decrease of the material specified from the time bids were received to the time material was ordered and applying that percentage to the material cost included in the Contractor's bid. To determine the adjustment for any material specified in this provision, the following formula will be used.

$$A = ((B/C) \times D) - D$$

Where: A = equitable adjustment for material cost

B = Monthly average price index during the month material was ordered

C = Monthly average price index during the month bids were received

D = Material cost included in Contractor's bid

The Contractor shall submit the original material quote(s) included in their bid price to substantiate item D in the calculation above.

The Contractor shall procure materials as soon as practical after issuance of Notice to Proceed to minimize escalation impacts. Requests for equitable adjustment due to escalation shall be made in accordance with Article 11 of the General Conditions (Change of Contract Price). Requests for equitable adjustment will not be accepted if requested more than 90 days after Notice to Proceed.

SC-11.04 C. Article 11, Paragraph 11.04, Unit Price Work, is amended by deleting Paragraph 11.04 C and replacing it with the following:

CITY may add or delete any quantity of work to the project, by Work Change Directive, at the established unit price. The established unit prices shall not be adjusted regardless of actual quantities.

SC-12.01. Article 12, Paragraph 12.01, Time of the Essence is amended by adding the following new Subparagraphs immediately following Subparagraph 12.01 A:

B. Starting and Completion

1. The Work to be performed under this Contract shall begin on the date specified in the written Notice to Proceed issued by the Director of Water Services, and the Work shall be substantially complete, in accordance with Paragraph 14.04, within **360 Calendar Days** thereafter. Once the Work starts, CONTRACTOR shall continuously pursue completion of the Work.

2. The Work shall be completed and ready for final payment in accordance with Paragraph 14.07 **within 90 Calendar Days** after the date of Substantial Completion of the Work.

C. Liquidated Damages

1. If the Work is not substantially completed, in accordance with Paragraph 14.04, within the period stated in Paragraph 12.01 B.1, CONTRACTOR shall pay to CITY the amount of **two thousand dollars ($2,000.00)** as liquidated damages and not as a penalty for each Calendar Day until the Work is substantially complete. The amount of liquidated damages shall be deducted from any payments due or to become due CONTRACTOR.

2. If the Work is not completed and ready for final payment in accordance with Paragraph 14.07, within the period stated in Paragraph 12.01 B.2, CONTRACTOR shall pay to CITY the amount of **five hundred dollars ($500.00)** as liquidated damages and not as a penalty for each Calendar Day until the Work is completed and ready for final payment. The amount of liquidated damages shall be deducted from any payments due or to become due CONTRACTOR.

SC-13.03 Article 13, Paragraph 13.03, Notice of Defects is amended by adding the following new Subparagraph immediately following Subparagraph 13.03 A:

B. Once the Non-Conformance Notice Part 1 – Identification has been given to the CONTRACTOR, per Article 9, Paragraph 9.04, Subparagraph B, the CONTRACTOR shall propose their corrective action plan with a detailed description of corrective work and proposed completion schedule in writing to the DESIGN PROFESSIONAL within the time identified in Part 1 of the Non-Conformance Notice. The DESIGN PROFESSIONAL and CITY shall approve CONTRACTOR's corrective action plan prior to commencement of remedial work. The Contractor shall resubmit its corrective action plan to address review comments received from CITY and DESIGN PROFESSIONAL. The DESIGN PROFESSIONAL shall document the approved corrective action plan in Part 2 – Disposition and Corrective Action of the Notice of Non-Conformance and/or Defective Work. The DESIGN PROFESSIONAL shall then distribute the Non-Conformance Notice / Defective Work Form to the CITY and CONTRACTOR. CONTRACTOR shall complete the corrective work in accordance with Article 13.06.

SC-13.06 Article 13, Paragraph 13.06, Correction of Removal of Defective Work is amended by adding the following new Subparagraph immediately following Subparagraph 13.06 A:

B. Once the corrective action has been taken, the DESIGN PROFESSIONAL shall verify that the agreed upon resolution has been carried out in accordance with the procedures and verification process agreed upon in Part 2 – Disposition and Corrective Action of the Non-Conformance Notice and/or Defective Work. The DESIGN PROFESSIONAL shall document how satisfactory completion of corrective action was verified in Part 3 – Verification of Corrective Action. The DESIGN PROFESSIONAL shall then distribute the

Non-Conformance Notice / Defective Work Form to the CITY and CONTRACTOR.

SC-13.07 Article 13, Paragraph 13.07, Correction Period, Subparagraph A is amended as follows:

The correction period set forth in Paragraph 13.07 A shall be three (3) years instead of one (1) year, which longer period of time shall also be applicable to the correction period set forth in Paragraph 13.07 C. All other provisions of Paragraph 13.07 remain unchanged except as necessary to accommodate the revised length of the correction period.

SC-14.02 A. Article 14, Paragraph 14.02, Application for Progress Payments, Subparagraph A is amended by deleting Item 3 and adding the following:

3. CITY shall make payments to CONTRACTOR on a monthly basis. Payments to CONTRACTOR will be made on the basis of ninety-five percent (95%) of the value of the Work satisfactorily completed plus ninety-five percent (95%) of the value of properly stored and insured, unused materials on hand on the Site of the Work. CITY shall retain five percent (5%) of each partial payment until completion and acceptance of the Work covered by the Contract and final payment is due. All Work covered by a payment becomes CITY's property, provided that the Work paid for remains the sole responsibility of CONTRACTOR until all terms and conditions of the Contract have been met.

SC-14.04. Article 14, Paragraph 14.04, Substantial Completion or Achievement of Full Operation, Subparagraph A is supplemented as follows:

A. To meet the definition of Achievement of Full Operation, the following items of the Work must be operational and ready for CITY's continuous use as intended:
   - All sanitary sewers replaced/rehabilitated
   - All manholes installed/replaced/rehabilitated
   - All service laterals replaced/rehabilitated
   - All post construction Closed Circuit Television (CCTV) completed
   - All surface restoration completed

SC-14.05 Article 14, Paragraph 14.05, Partial Utilization is amended by adding the following new Subparagraph A.3. immediately following Subparagraph 14.05 A.2:

3. CITY at any time may make a written request to CONTRACTOR to permit CITY to take over operation of any part of the Work although it is not substantially complete. A copy of the request will be sent to DESIGN PROFESSIONAL, and within a reasonable time thereafter CITY, CONTRACTOR and DESIGN PROFESSIONAL shall make an inspection of that part of the Work to determine its status of completion and will prepare a list of the items remaining to be completed or corrected thereon before final payment. If CONTRACTOR does not make written objection to CITY and DESIGN PROFESSIONAL that such part of the Work is not ready for separate operation by CITY, DESIGN PROFESSIONAL will finalize the list of items to be completed or corrected and will deliver such lists to CITY and CONTRACTOR. DESIGN PROFESSIONAL will also make a written recommendation as to the division of responsibilities pending final payment between CITY and CONTRACTOR with respect to security, operation, safety, maintenance, utilities, insurance, warranties and guarantees for that part of the Work, which recommendation will become binding upon CITY and CONTRACTOR at the time when CITY takes over such operation (unless they shall have otherwise agreed in writing and so informed DESIGN PROFESSIONAL). During such operation and prior to Substantial Completion of such

part of the Work, CITY shall allow CONTRACTOR reasonable access to complete or correct items on said list and to complete other related Work.

NON-CONFORMANCE NOTICE (NCN)

Project No.:	NCN No.:
Name of Responsible Contractor/Organization:	Date:
Contractor Contact Name:	Page:
Contractor Contact Phone and Email:	

STEP 1 – IDENTIFICATION		
Nonconformance Identified Via: ☐ Internal Quality Audit ☐ Shop Inspection / Testing ☐ Jobsite Inspection / Testing Jobsite Inspection Report No.: ☐ Other:		
Detailed References (Specifications, Drawings, Details, Standards, etc):		
Description of Requirement:		
Description of Defective or Nonconforming Item(s) or Requirement:		
Nonconforming Identified By (Name):	Signature:	Date (MM/DD/YYY):
Contractor **shall respond** to this Notice on or before this date (MM/DD/YYYY):		
Delivered to Contractor (Name of Recipient):	Signature:	Date (MM/DD/YYY):

Attachments for Nonconforming work? ☐ YES ☐ NO	
If YES, list attachments:	

NON-CONFORMANCE NOTICE (NCN)

STEP 2 – DISPOSITION AND CORRECTIVE ACTION		
Date of Contractor's response to this notice (MM/DD/YYY):		
Description of Proposed Corrective Action:		
Disposition: ☐ Accept As-Is ☐ Accept Pending Further Corrective Action ☐ Reject		
Accepted By (Design Professional):	Signature:	Date:
Accepted By (SSP Project Manager):	Signature:	Date:
Accepted By (Construction Manager):	Signature:	Date:

Corrective Action Attachments? ☐ YES ☐ NO	
If YES, list attachments:	

NON-CONFORMANCE NOTICE (NCN)

STEP 3 – VERIFICATION OF CORRECTIVE ACTION		
Description of how corrective action was verified:		
Corrective Action Verified By (RPR):	Signature:	Date:
Accepted/Closed By (SSP Project Manager):	Signature:	Date:

SECTION 00830

PREVAILING WAGE

1. Annual Wage Order No. 28
2. **0830.03 Division of Labor Standards Rules & Regulations** are incorporated into and made part of this Contract and are available at http://s1.sos.mo.gov/cmsimages/adrules/csr/current/8csr/8c30-3.pdf.

Missouri
Division of Labor Standards
WAGE AND HOUR SECTION

MICHAEL L. PARSON, Governor

Annual Wage Order No. 28

Section 024
CLAY COUNTY

In accordance with Section 290.262 RSMo 2000, within thirty (30) days after a certified copy of this Annual Wage Order has been filed with the Secretary of State as indicated below, any person who may be affected by this Annual Wage Order may object by filing an objection in triplicate with the Labor and Industrial Relations Commission, P.O. Box 599, Jefferson City, MO 65102-0599. Such objections must set forth in writing the specific grounds of objection. Each objection shall certify that a copy has been furnished to the Division of Labor Standards, P.O. Box 449, Jefferson City, MO 65102-0449 pursuant to 8 CSR 20-5.010(1). A certified copy of the Annual Wage Order has been filed with the Secretary of State of Missouri.

Original Signed by
Taylor Burks, Director
Division of Labor Standards

Filed With Secretary of State: **March 10, 2021**

Last Date Objections May Be Filed: **April 8, 2021**

Prepared by Missouri Department of Labor and Industrial Relations

OCCUPATIONAL TITLE	**Prevailing Hourly Rate
Asbestos Worker	$66.47
Boilermaker	*$31.11
Bricklayer	$57.60
Carpenter	$58.61
Lather	
Linoleum Layer	
Millwright	
Pile Driver	
Cement Mason	$54.61
Plasterer	
Communications Technician	$57.45
Electrician (Inside Wireman)	$64.35
Electrician Outside Lineman	*$31.11
Lineman Operator	
Lineman - Tree Trimmer	
Groundman	
Groundman - Tree Trimmer	
Elevator Constructor	*$31.11
Glazier	*$31.11
Ironworker	$64.99
Laborer	$47.78
General Laborer	
First Semi-Skilled	
Second Semi-Skilled	
Mason	$53.02
Marble Mason	
Marble Finisher	
Terrazzo Worker	
Terrazzo Finisher	
Tile Setter	
Tile Finisher	
Operating Engineer	$56.59
Group I	
Group II	
Group III	
Group III-A	
Group IV	
Group V	
Painter	$49.49
Plumber	$71.48
Pipe Fitter	
Roofer	$56.47
Sheet Metal Worker	$69.52
Sprinkler Fitter	*$31.11
Truck Driver	*$31.11
Truck Control Service Driver	
Group I	
Group II	
Group III	
Group IV	

*The Division of Labor Standards received less than 1,000 reportable hours for this occupational title.
Public works contracting minimum wage is established for this occupational title using data provided by Missouri Economic Research and Information Center.
**The Prevailing Hourly Rate includes any applicable fringe benefit amounts for each occupational title.

OCCUPATIONAL TITLE	**Prevailing Hourly Rate
Carpenter	$59.65
Millwright	
Pile Driver	
Electrician (Outside Lineman)	*$31.11
Lineman Operator	
Lineman - Tree Trimmer	
Groundman	
Groundman - Tree Trimmer	
Laborer	**$48.30**
General Laborer	
Skilled Laborer	
Operating Engineer	$56.36
Group I	
Group II	
Group III	
Group IV	
Truck Driver	$48.94
Truck Control Service Driver	
Group I	
Group II	
Group III	
Group IV	

Use Heavy Construction Rates on Highway and Heavy construction in accordance with the classifications of construction work established in 8 CSR 30-3.040(3).

Use Building Construction Rates on Building construction in accordance with the classifications of construction work established in 8 CSR 30-3.040(2).

If a worker is performing work on a heavy construction project within an occupational title that is not listed on the Heavy Construction Rate Sheet, use the rate for that occupational title as shown on the Building Construction Rate Sheet.

*The Division of Labor Standards received less than 1,000 reportable hours for this occupational title. Public works contracting minimum wage is established for this occupational title using data provided by Missouri Economic Research and Information Center.

**The Prevailing Hourly Rate includes any applicable fringe benefit amounts for each occupational title.

OVERTIME
and
HOLIDAYS

OVERTIME

For all work performed on a Sunday or a holiday, not less than twice (2x) the prevailing hourly rate of wages for work of a similar character in the locality in which the work is performed or the public works contracting minimum wage, whichever is applicable, shall be paid to all workers employed by or on behalf of any public body engaged in the construction of public works, exclusive of maintenance work.

For all overtime work performed, not less than one and one-half (1½) the prevailing hourly rate of wages for work of a similar character in the locality in which the work is performed or the public works contracting minimum wage, whichever is applicable, shall be paid to all workers employed by or on behalf of any public body engaged in the construction of public works, exclusive of maintenance work or contractual obligation. For purposes of this subdivision, **"overtime work"** shall include work that exceeds ten hours in one day and work in excess of forty hours in one calendar week; and

A thirty-minute lunch period on each calendar day shall be allowed for each worker on a public works project, provided that such time shall not be considered as time worked.

HOLIDAYS

January first;
The last Monday in May;
July fourth;
The first Monday in September;
November eleventh;
The fourth Thursday in November; and
December twenty-fifth;

If any holiday falls on a Sunday, the following Monday shall be considered a holiday.

SECTION 00830

PREVAILING WAGE

1. Annual Wage Order No. 28
2. **0830.03 Division of Labor Standards Rules & Regulations** are incorporated into and made part of this Contract and are available at http://s1.sos.mo.gov/cmsimages/adrules/csr/current/8csr/8c30-3.pdf.

Missouri
Division of Labor Standards
WAGE AND HOUR SECTION

MICHAEL L. PARSON, Governor

Annual Wage Order No. 28

Section 083
PLATTE COUNTY

In accordance with Section 290.262 RSMo 2000, within thirty (30) days after a certified copy of this Annual Wage Order has been filed with the Secretary of State as indicated below, any person who may be affected by this Annual Wage Order may object by filing an objection in triplicate with the Labor and Industrial Relations Commission, P.O. Box 599, Jefferson City, MO 65102-0599. Such objections must set forth in writing the specific grounds of objection. Each objection shall certify that a copy has been furnished to the Division of Labor Standards, P.O. Box 449, Jefferson City, MO 65102-0449 pursuant to 8 CSR 20-5.010(1). A certified copy of the Annual Wage Order has been filed with the Secretary of State of Missouri.

Original Signed by
Taylor Burks, Director
Division of Labor Standards

Filed With Secretary of State: **March 10, 2021**

Last Date Objections May Be Filed: **April 8, 2021**

Prepared by Missouri Department of Labor and Industrial Relations

Building Construction Rates for
PLATTE County

Section 083

OCCUPATIONAL TITLE	**Prevailing Hourly Rate
Asbestos Worker	$67.59
Boilermaker	*$30.80
Bricklayer	$57.96
Carpenter	$58.23
Lather	
Linoleum Layer	
Millwright	
Pile Driver	
Cement Mason	*$30.80
Plasterer	
Communications Technician	$60.15
Electrician (Inside Wireman)	$64.42
Electrician Outside Lineman	$70.22
Lineman Operator	
Lineman - Tree Trimmer	
Groundman	
Groundman - Tree Trimmer	
Elevator Constructor	*$30.80
Glazier	*$30.80
Ironworker	$65.30
Laborer	$46.07
General Laborer	
First Semi-Skilled	
Second Semi-Skilled	
Mason	*$30.80
Marble Mason	
Marble Finisher	
Terrazzo Worker	
Terrazzo Finisher	
Tile Setter	
Tile Finisher	
Operating Engineer	$58.47
Group I	
Group II	
Group III	
Group III-A	
Group IV	
Group V	
Painter	$48.96
Plumber	$71.21
Pipe Fitter	
Roofer	$56.35
Sheet Metal Worker	$69.50
Sprinkler Fitter	*$30.80
Truck Driver	*$30.80
Truck Control Service Driver	
Group I	
Group II	
Group III	
Group IV	

*The Division of Labor Standards received less than 1,000 reportable hours for this occupational title. Public works contracting minimum wage is established for this occupational title using data provided by Missouri Economic Research and Information Center.

**The Prevailing Hourly Rate includes any applicable fringe benefit amounts for each occupational title.

OCCUPATIONAL TITLE	**Prevailing Hourly Rate
Carpenter	$59.33
Millwright	
Pile Driver	
Electrician (Outside Lineman)	*$30.80
Lineman Operator	
Lineman - Tree Trimmer	
Groundman	
Groundman - Tree Trimmer	
Laborer	**$48.43**
General Laborer	
Skilled Laborer	
Operating Engineer	$56.35
Group I	
Group II	
Group III	
Group IV	
Truck Driver	$48.91
Truck Control Service Driver	
Group I	
Group II	
Group III	
Group IV	

Use Heavy Construction Rates on Highway and Heavy construction in accordance with the classifications of construction work established in 8 CSR 30-3.040(3).

Use Building Construction Rates on Building construction in accordance with the classifications of construction work established in 8 CSR 30-3.040(2).

If a worker is performing work on a heavy construction project within an occupational title that is not listed on the Heavy Construction Rate Sheet, use the rate for that occupational title as shown on the Building Construction Rate Sheet.

*The Division of Labor Standards received less than 1,000 reportable hours for this occupational title. Public works contracting minimum wage is established for this occupational title using data provided by Missouri Economic Research and Information Center.

**The Prevailing Hourly Rate includes any applicable fringe benefit amounts for each occupational title.

OVERTIME
and
HOLIDAYS

OVERTIME

For all work performed on a Sunday or a holiday, not less than twice (2x) the prevailing hourly rate of wages for work of a similar character in the locality in which the work is performed or the public works contracting minimum wage, whichever is applicable, shall be paid to all workers employed by or on behalf of any public body engaged in the construction of public works, exclusive of maintenance work.

For all overtime work performed, not less than one and one-half (1½) the prevailing hourly rate of wages for work of a similar character in the locality in which the work is performed or the public works contracting minimum wage, whichever is applicable, shall be paid to all workers employed by or on behalf of any public body engaged in the construction of public works, exclusive of maintenance work or contractual obligation. For purposes of this subdivision, **"overtime work"** shall include work that exceeds ten hours in one day and work in excess of forty hours in one calendar week; and

A thirty-minute lunch period on each calendar day shall be allowed for each worker on a public works project, provided that such time shall not be considered as time worked.

HOLIDAYS

January first;
The last Monday in May;
July fourth;
The first Monday in September;
November eleventh;
The fourth Thursday in November; and
December twenty-fifth;

If any holiday falls on a Sunday, the following Monday shall be considered a holiday.

Rules of
Department of Labor and Industrial Relations
Division 30—Division of Labor Standards
Chapter 3—Prevailing Wage Law Rules

Title		Page
8 CSR 30-3.010	Applicable Wage Rates for Public Works Projects	3
8 CSR 30-3.020	Definitions	4
8 CSR 30-3.030	Apprentices and Entry-Level Workers	4
8 CSR 30-3.040	Classifications of Construction Work	5
8 CSR 30-3.050	Posting of Prevailing Wage Rates	5
8 CSR 30-3.060	Occupational Titles of Work Descriptions	5

Title 8—DEPARTMENT OF LABOR AND INDUSTRIAL RELATIONS
Division 30—Division of Labor Standards
Chapter 3—Prevailing Wage Law Rules

8 CSR 30-3.010 Applicable Wage Rates for Public Works Projects

PURPOSE: This rule sets forth applicable wage requirements relative to work performed by workers on public funded projects.

(1) All public bodies of Missouri, before advertising for bids or undertaking construction work, must obtain from the department an annual wage order which sets forth the applicable hourly rate of wages (the prevailing wage or the public works contracting minimum wage as provided in section 290.257) in the locality. The rates so determined shall be incorporated in the contract specifications and made a part of those specifications, except that construction contracts of the State Highway and Transportation Commission need not list specific wage rates to apply, but may refer to the wage rates contained in the appropriate General Wage Orders issued by the department, as applicable.

(2) Request for annual wage orders shall be initiated at least ten (10) calendar days before advertisement of the specifications for the contract for which the determination is sought. An exception from this provision will be made by the department only upon a proper showing of extenuating circumstances. The department has prepared and printed Form No. PW-3 for use in making a request. The form may be secured by writing Division of Labor Standards, PO Box 449, Jefferson City, MO 65102 or by visiting the following website: https://labor.mo.gov/sites/labor/files/pubs_forms/PW-3-AI.pdf.

(3) A project notification form PW-2 must be filed for each separate project by the public body, except the State Highways and Transportation Commission, which will be furnished prevailing wage determinations under General Wage Orders.

(4) The annual wage order issued by the department contains the current applicable wage rates in the locality at the time the annual wage order is issued. Hours worked during the calendar year are used to set the prevailing wage rates in the annual wage order issued in March of the following year. The department will consider hours submitted for use in its initial determination of the prevailing wage rates to be included in a particular year's wage order only if those hours are received from a contractor, by either paper submission on a form provided by the department or in electronic format, no later than January 31 of that year. Handwritten submissions will not be accepted. For purposes of submitting reportable hours, the term "contractor" shall include a "subcontractor." The department will not include the following hours in the calculation of the annual wage order:

(A) Hours not readily identifiable as being submitted by a contractor;

(B) Hours worked by federally-registered apprentices or entry-level workers;

(C) Hours worked on residential construction projects.

(5) Section 290.262.8, RSMo, provides that the annual wage order for a particular occupational title may be altered once each year with an incremental increase. A public body shall specify in the call for bids for each contract the applicable hourly rate of wages in the locality for each type of worker as set forth in the annual wage order or any replacement page(s) identifying the annual incremental increase issued by the department for the prevailing hourly rate of wages. The wage rates attached to, and made a part of, the call for bids for a contract shall remain in effect for the duration of that particular contract.

(6) It should be understood by all interested parties that the certified applicable wage rates determined by the department are minimum wage rates. The contractor may not pay less than the applicable wage rates determined by the department for the project or contract awarded to him/her as set forth in the proposal on which s/he submitted his/her bid. Employees are free to bargain for a higher rate of pay and employers are free to pay a higher rate of pay.

(7) Each month the successful bid contractors shall submit certified copies of their current payrolls to the contracting public body. The public body, upon receipt of the payrolls on a project, shall keep the payrolls on file for a period of one (1) year from the date of submission of the final payrolls by the contractor. Payroll records shall set out accurately and completely, for each individual, the following information which shall be specifically recorded by occupational title classification and type of worker (journeyman, entry-level worker, or federally-registered apprentice): name and address of each worker, rate of pay, daily and weekly number of hours worked, deduction made, and actual wages paid. The payroll records shall be available at all times for inspection by authorized representatives of the Department of Labor and Industrial Relations.

(8) The public body shall make examinations of the payrolls and other records of each contractor or subcontractor as may be necessary to assure compliance with the provisions of the law. In connection with those examinations, particular attention should be given to the correctness of classifications and any disproportionate employment of any workers. The examinations shall be of a frequency that may be necessary to assure conformity with the provisions of the law. An examination shall be made after the project has been substantially completed but prior to the acceptance of the affidavit as required by section 290.290, RSMo. If any violation of sections 290.210–290.580, RSMo, is discovered by the inspecting public body, it is their duty under section 290.250, RSMo, to withhold and retain from payments to the contractor all sums and amounts due and owing as a result of any violation. Any violation shall be immediately reported to the Division of Labor Standards at PO Box 449, Jefferson City, MO 65102 or by telephone or electronically.

AUTHORITY: section 290.240.2, RSMo Supp. 2018. Original rule filed Dec. 18, 1975, effective Dec. 28, 1975. Amended: Filed July 24, 1984, effective Nov. 11, 1984. Amended: Filed Aug. 24, 1990, effective April 29, 1991. Emergency amendment filed Sept. 15, 1994, effective Sept. 25, 1994, expired Jan. 13, 1995. Emergency amendment filed Dec. 9, 1994, effective Jan. 14, 1995, expired May 13, 1995. Emergency amendment filed May 1, 1995, effective May 14, 1995, expired Sept. 10, 1995. Amended: Filed May 1, 1995, effective Aug. 30, 1995. Amended: Filed July 17, 1995, effective Jan. 30, 1996. Amended: Filed March 27, 2000, effective Oct. 30, 2000. Amended: Filed Nov. 9, 2000, effective May 30, 2001. Emergency amendment filed Nov. 10, 2015, effective Nov. 20, 2015, expired May 17, 2016. Amended: Filed Nov. 10, 2015, effective April 30, 2016. Emergency amendment filed Nov. 21, 2018, effective Dec. 1, 2018, expired May 29, 2019. Amended: Filed Nov. 21, 2018, effective July 30, 2019.*

**Original authority: 290.240, RSMo 1957, amended 1969, 2018.*

***Woodman Engineering Company v. Butler**, 442 SW2d 83 (Mo. App. 1969). The function of reviewing court in prevailing wage cases is to decide if the determination of the commission was authorized by law and was supported by competent and substantial evidence upon the whole record. A decision clearly contrary to the evidence should be set aside. However, all pertinent evidence and factors must be considered in determining the applicable prevailing wage.*

***City of Joplin v. Industrial Commission of Missouri**, 329 SW2d 687 (Mo. En Banc 1959). Administrative agencies do not have authority to determine constitutionality of legislation. Determination of prevailing wage earnings by commission must be based upon all current relevant factors.*

8 CSR 30-3.020 Definitions

PURPOSE: This rule sets forth the definition of certain terms for purposes of issuance and use of annual and general wage orders under the Prevailing Wage Law, sections 290.210–290.580, RSMo and the rules in this chapter.

(1) The term construction of public works generally includes construction activity as distinguished from manufacturing, furnishing of materials or servicing and maintenance work. The term includes, without limitation, the construction of buildings, structures and improvements of all types, such as bridges, dams, plants, highways, parkways, streets, subways, tunnels, sewers, mains, power lines, pumping stations, heavy generators, railways, airports, terminals, docks, piers, wharves, ways, lighthouses, buoys, jetties, breakwaters, levees, canals, dredging, shoring, rehabilitation and reactivation of plants, scaffolding, drilling, blasting, excavating, clearing and landscaping. The manufacture or furnishing of materials, articles, supplies or equipment is not construction of public works within the meaning of the Prevailing Wage Law unless conducted in connection with and at the site of construction. The term construction of public works also means all work done in the construction or development of a public works project, including without limitation, altering, remodeling, demolishing existing structures, installation on the site of the construction of items fabricated off-site, painting and decorating, the transporting of materials and supplies to or from the site of the construction by the employees of the construction contractor or construction subcontractor, and the manufacturing or furnishing of materials, articles, supplies or equipment on the site of the construction by persons employed by the contractor or subcontractor.

(2) The term site of the building or construction job means the physical place(s) where the public works are to be constructed, and also means other adjacent or nearby property used by the contractor or subcontractor in that construction which can reasonably be said to be included in the site. Except as otherwise provided in this section, fabrication plants, mobile factories, batch plants, borrow pits, job headquarters, tool yards and the like, are part of the site of the building or construction job provided they are dedicated in a substantial degree to the performance of the public works project, and are so located in proximity to the actual construction location that it would be reasonable to include them. The dedication of seventy-five percent (75%) or more of the output of a fabrication plant, batch plant and the like, to the public works project raises a rebuttable presumption that the facility is part of the site of the building or construction job. The presumption may be rebutted by evidence showing that the facility was established for other legitimate commercial purposes that make the facility useful well after the public works project has been completed. Not included in the site of the building or construction job are permanent home offices, branch plant establishments, fabrication plants and tool yards of a contractor or subcontractor whose location and continuance in operation are determined wholly without regard to a particular public works project. In addition, fabrication plants, batch plants, borrow pits, job headquarters, tool yards and the like, of a commercial supplier or materialman which are established by a supplier of materials for the project before opening of bids and not on the project site are not included in the site of the building or construction job. The permanent, previously established facilities are not a part of the site of the building or construction job, even where the operations for a period of time may be dedicated exclusively, or nearly so, to the performance of a public works project.

AUTHORITY: section 290.240, RSMo 1994. Original rule filed Aug. 24, 1990, effective April 29, 1991. Amended: Filed July 17, 1995, effective Jan. 30, 1996.*

**Original authority: 290.240, RSMo 1957, amended 1959.*

8 CSR 30-3.030 Apprentices and Entry-Level Workers

PURPOSE: This rule sets forth the requirements for the payment of wages to apprentices and entry-level workers employed on public works subject to the Prevailing Wage Law.

PUBLISHER'S NOTE: The secretary of state has determined that the publication of the entire text of the material which is incorporated by reference as a portion of this rule would be unduly cumbersome or expensive. This material as incorporated by reference in this rule shall be maintained by the agency at its headquarters and shall be made available to the public for inspection and copying at no more than the actual cost of reproduction. This note applies only to the reference material. The entire text of the rule is printed here.

(1) Journeymen's rate of pay shall be paid to all workers employed on public works construction except entry-level workers or apprentices registered and participating in apprentice programs registered with the United States Department of Labor, Employment and Training Administration; and apprentices registered and participating in programs certified by the Secretary of the United States Department of Transportation as promoting equal opportunity in connection with federal-aid highway construction programs. Such workers shall be paid not less than fifty percent (50%) of the applicable wage rate for a journeyman worker under the appropriate occupational title for a specific locality. In calculating the applicable wage rate for a journeyman worker, fringe benefits shall be included.

(2) As set forth in section 290.235, "on-the-job training workers" are defined as follows:

(A) "Federally-registered apprentices" – Workers participating in programs administered by the United States Department of Labor and subject to their specific requirements (*See 29 U.S.C. section 50 and 29 C.F.R. 29)* and workers participating in programs administered by the United States Department of Transportation and subject to their specific requirements. (*See 23 U.S.C. section 113 and 23 C.F.R. 230);* and

(B) "Entry-level workers"—Any worker who is not a journeyman and who is not otherwise enrolled in a federally-registered apprenticeship program but is participating in an on-the-job training program provided by the contractor for whom they perform work on a public construction project.

(3) Workers employed on federal-aid highway construction projects may be paid at an apprentice rate of pay if enrolled in an apprenticeship or skill training program which has been certified by the Secretary of the United States Department of Transportation pursuant to 23 U.S.C. 113. In the event the Secretary of Transportation withdraws approval of a program, the contractor will no longer be permitted to pay workers less than the applicable predetermined rate for the work performed until an acceptable program is approved.

AUTHORITY: section 290.240, RSMo Supp. 2018. Original rule filed Aug. 24, 1990, effective April 29, 1991. Amended: Filed July 17, 1995, effective Jan. 30, 1996. Emergency amendment filed Nov. 21, 2018, effective Dec. 1, 2018, expired May 29, 2019. Amended:*

Filed Nov. 21, 2018, effective July 30, 2019.

**Original authority: 290.240, RSMo 1957, amended 1969, 2018.*

8 CSR 30-3.040 Classifications of Construction Work

PURPOSE: The Department of Labor and Industrial Relations has the responsibility under section 290.260, RSMo to determine the prevailing hourly rate of wages to be paid to workers engaged in work of a similar character. This rule establishes classifications of construction work for the department to use in determining the prevailing hourly rate of wages for work of a similar character.

(1) All public works construction, for which the prevailing hourly rate of wages or the public works contracting minimum wage of workers are to be determined, shall be classified as either—

(A) Building construction; or

(B) Highway and heavy construction.

(2) Building construction shall mean the following:

(A) Building structures, including modification, additions or repairs, or both, to be used for shelter, protection, comfort, convenience, entertainment or recreation, or for protection of people or equipment;

(B) Buildings at an airport project, such as terminal buildings, freight buildings, and any other construction necessary for the operation of the airport facilities;

(C) Stadiums, athletic fields, dressing rooms, bleachers, and all other buildings needed in connection with an athletic or entertainment facility;

(D) Entire buildings that are built aboveground in connection with highway, subway, or tunnel projects, such as tool stations or housing for mechanical equipment;

(E) Excavation for the building itself, including backfilling inside and outside the building;

(F) Storm and sanitary sewers inside the building and to the curb line;

(G) Work in connection with telephone, electrical, water, oil, gas, or fuel lines, or other utility or communication lines inside a building and to the curb line;

(H) Sidewalks other than those that are poured in connection with a street or road project;

(I) Driveways that are built to serve a building;

(J) Parking lots connected to a building and all structures built as parking facilities;

(K) Retaining walls built in conjunction with a building project;

(L) Demolition of a building(s) as part of the site preparation for new building construction;

(M) Landscaping of building sites or the planting of all shrubbery that is incidental to building construction as defined in section (2); and

(N) Work on water and wastewater treatment plants within the fence line.

(3) Highway and heavy construction shall mean the following:

(A) Work in connection with roads, streets, parkways, alleys and highways including, but not limited to, grading, paving, curbing, signs, fences, guard rails, bridges, lighting, retaining walls, and landscaping;

(B) Work on viaducts, overpasses, underpasses, drainage projects, aqueducts, irrigation projects, flood control projects, reclamation projects, reservoir filtration and supply projects, water power, duct lines, distribution lines, pipe lines, locks, dikes, levees, revetments projects, excluding work specifically defined as building construction;

(C) Work in connection with underground construction on tunnels and shafts;

(D) Railroad work in its entirety, including elevated railroads;

(E) Main and side sewers;

(F) Work in connection with airports, such as runways, roads, and streets, but excluding that which is listed as building construction;

(G) Work in connection with telephone, electrical, water, oil, gas, or fuel lines, or any other utility or communication lines from the curb line;

(H) Sidewalks when poured incidental to a street or road project;

(I) Parking lots not incidental to a building construction project; and

(J) Demolition of all buildings as part of site preparation for any highway and heavy construction as is otherwise defined in section (3).

AUTHORITY: section 290.240, RSMo Supp. 2018. Original rule filed Aug. 24, 1990, effective April 29, 1991. Amended: Filed July 17, 1995, effective Jan. 30, 1996. Emergency amendment filed Nov. 21, 2018, effective Dec. 1, 2018, expired May 29, 2019. Amended: Filed Nov. 21, 2018, effective July 30, 2019.*

**Original authority: 290.240, RSMo 1957, amended 1969, 2018.*

8 CSR 30-3.050 Posting of Prevailing Wage Rates

PURPOSE: This rule sets forth the requirements for the posting of prevailing wage rates on public works projects subject to the Prevailing Wage Law.

(1) Contractors and subcontractors engaged in public works projects shall post the applicable hourly rate of wages (the prevailing wage or the public works contracting minimum wage as provided in section 290.257, excluding rates on projects for which the engineer's estimate or the bid accepted by the public body for the total project cost is less than seventy-five thousand dollars ($75,000)) in a dry, accessible place within the field office at the site of the building or construction job. On public works projects for which no field office is needed or established, such as road construction, sewer lines, pipelines, and the like, a contractor/subcontractor may post the applicable hourly rates of wages at the contractor/subcontractor's local office or batch plant, so long as the contractor/subcontractor provides a copy of the prevailing hourly wage rates to any worker upon request. Applicable hourly wage rates must be posted and maintained in a clearly legible condition for the duration of the public works project as provided by law.

AUTHORITY: section 290.240, RSMo Supp. 2018. Original rule filed Aug. 24, 1990, effective April 29, 1991. Emergency amendment filed Nov. 21, 2018, effective Dec. 1, 2018, expired May 29, 2019. Amended: Filed Nov. 21, 2018, effective July 30, 2019.*

**Original authority: 290.240, RSMo 1957, amended 1969, 2018.*

8 CSR 30-3.060 Occupational Titles of Work Descriptions

PURPOSE: The Department of Labor and Industrial Relations is required to determine the prevailing hourly rate of wages to be paid to each worker engaged in construction on a public works project, relative to the type of work performed by each worker. This rule describes by occupational title the type of work performed in the construction of a public works project in Missouri and sets forth the procedures to be followed in identifying each occupational title utilized on a public works project.

(1) Each occupational title defines by name the type of work performed in the construction of a public works project. The description of work designated for a particular occupational title is not intended to be jurisdictional in scope or nature, and is not to be construed as limiting or prohibiting workers from engaging in construction work falling within

several occupational titles.

(2) Each occupational title of work description shall be based upon the particular nature of the work performed, with consideration given to those trades, occupations or work generally considered within the construction industry as constituting a distinct classification of work. In determining occupational titles and scope of work definitions, the department shall consider the following:

(A) Collective bargaining agreements;

(B) *Dictionary of Occupational Titles*, as published by the United States Department of Labor; and

(C) Opinions of experts from organized labor and the opinions of contractors and contractor associations as they relate to the custom and usage applicable to the construction industry in Missouri.

(3) Interested parties who wish to submit wage information to be used in establishing the prevailing hourly rate of wages for a particular class or type of work are required to identify the work according to the applicable occupational title of work description set forth in this rule. Hours of work reported by a contractor or subcontractor to the department shall not be used to establish the prevailing hourly rate of wages if the party submitting the hours of work fails to identify the work under one of the occupational titles included in section 290.257.

(4) Any question as to the proper classification of work should be resolved before the work in question is commenced. Interested parties are encouraged to contact the Prevailing Wage Section of the Division of Labor Standards for an interpretation of these rules and for a determination of the appropriate occupational title of work description, relative to the class or type of work to be performed.

(5) The occupational titles and work descriptions for each type or class of work contained herein are valid throughout the entire state of Missouri. Through an objection to a wage order, an interested party may assert that any given description of work, as stated within this rule, does not apply to a specific occupational title(s) and that a different work description should apply to that occupational title(s). The interested party shall have the burden of proving by a preponderance of the evidence the inapplicability of the description of work within that particular occupational title, but shall be afforded the opportunity to do so in a hearing on an objection to the wage order before the Labor and Industrial Relations Commission.

(6) Occupational titles of work descriptions may be obtained from the department by written request to the director of the Division of Labor Standards, PO Box 449, Jefferson City, MO 65102 or by visiting the following website: https://labor.mo.gov/DLS/PrevailingWage/pwContractors.

(7) The occupational titles of work descriptions set forth here are as follows:

(A) Asbestos Worker—Applies to workers who apply insulation materials to mechanical systems to reduce loss or absorption of heat, prevent moisture condensation, and to deaden sound and prevent vibration. The workers remove all insulation materials from mechanical systems unless the mechanical system is being scrapped. The work falling within this occupational title of work description includes:

1. The preparation, including the building of enclosures and hanging polyurethane, and physical distribution on the job site of asbestos, cork, plastic, magnesia or similar materials, or other materials used as a substitute, and used as thermal insulation. The manufacture, fabrication, assembling, molding, handling, erection, spraying, pouring, making, hanging, application, adjusting, alteration, repairing, dismantling, reconditioning, corrosion control, and testing of heat or frost insulation, such as asbestos, cork, mineral wall, infusorial earth, mercerized silk, flax, fiber, fire felt, asbestos paper, asbestos curtain, asbestos millboard, fibrous glass, foam glass, styrofoam, polyurethane, polystyrene, metals, plastics, fibrous matter, roving, and resins, and the erection of scaffolding up to fourteen feet (14'), working platform;

2. The covering, including encapsulation, of boilers, tanks, refrigeration units, evaporators, turbines, fittings, valves, ducts, flues, vats, equipment, hot and cold pipes, or any other hot or cold surfaces with the insulation materials listed in this rule, used for the purpose of thermal insulation, fire stoppage, fireproofing, radiator protection, sound deadeners, and the lagging (covering) on piping; and

3. The removal of all insulation materials from mechanical systems, unless the mechanical system is being scrapped, whether they contain asbestos or not (pipes, boilers, ducts, flues, breechings). All cleanup required in connection with this work, shall include the sealing, labeling, and dropping of scrap material into the appropriate containers. (After drop, final disposal is considered to be the class or type of work falling within the occupational title of work description for second semiskilled laborer.);

(B) Boilermaker—Applies to workers who assemble, erect, and repair boilers, tanks, vats, and pressure vessels according to blueprint specifications, using handtools, portable power tools, and equipment. The work falling within this occupational title of work description includes:

1. Locating and marking of reference points for columns on plates or foundations, using master straightedge, squares, transit, and measuring tape;

2. Using rigging or cranes to lift parts to specified positions;

3. Aligning structures or plate sections, using plumb bobs, levels, wedges, dogs, or turnbuckles;

4. Drilling, reaming, chipping, caulking, and grinding of structures and sections and bolting or welding them together;

5. Setting of drums and headers and installation of tubes;

6. Cleaning up as necessary in connection with this work; and

7. Riveting, acetylene burning, rigging, fitting-up, impact machine operating, unloading and handling of material and equipment where power equipment and rigging are required;

(C) Bricklayers—Applies to workers who prepare, lay, set, bed, point, patch, grout, caulk, cut, fit, plumb, align, level, anchor, bolt, or weld brick, stone masonry, precast aggregate panels, and all types of artificial or imitation masonry. Also, the workers install expansion joint materials in brick, stone masonry, precast aggregate panels, and all types of artificial or imitation masonry. The work falling within this occupational title of work description includes:

1. The unloading of brick, stone masonry, precast aggregate panels, and all types of artificial or imitation masonry where power equipment and rigging are required;

2. The masonry paving and rip-rapping of all types, with or without mortar;

3. The reinforcing of masonry, including placing, tying, and setting of rods;

4. The application of insulation systems and materials, and air and/or vapor barrier systems and materials, by spray, trowel, roller, adhesive, or mechanically fastened in or to all masonry walls;

5. The caulking of abutting masonry openings in masonry walls, expansion joints, and false joints in all types of masonry;

6. The waterproofing of all types of masonry, which shall include installation and application of air and/or vapor barrier systems and materials by spray, trowel, roller, adhesive, or mechanically fastened; and

7. The cleaning, tuckpointing, sandblasting, steam cleaning, and Gunite work on all types of masonry;

(D) Carpenter (which shall include pile driver, millwright, lather, and linoleum layer)—Applies to workers who construct,

erect, install, and repair structures, structural members and fixtures made of wood, plywood, wallboard, and materials that take the place of wood, such as plastic, metals, composites, fiberglass, and Transit sheeting and Cemesto Board, using carpenter hand tools and power tools. The work falling within this occupational title of work description includes:

1. General Carpenter.

A. The layout of buildings or structures on the site or plot. The installation of aluminum expansion joints for buildings and bridge structure as well as concrete strike-off machines.

B. The making and setting of all concrete forms (except curb forms on heavy construction), including establishment of building lines or flow lines (box culverts, bridges) including footing forms. The making of all forms used in tilt-up construction. The layout, installation, and construction for wall forms and footing forms, all block-outs, wood or steel, layout, and installation of all embedded items.

C. The building and handling of scaffolds used by carpenters to work from. All scaffolding, constructed or assembled, fourteen feet six inches (14'6") and higher for normal or specialty use—regardless of purpose.

D. The building of rough wooden structures, such as concrete forms, scaffolds, wooden bridges, trestles, coffer dams, tunnel and sewer support, welding and burning.

E. The selection of specified type of lumber or other materials. Prepare layout, using rule, framing square, and calipers. Mark cutting and assembling lines on materials, using pencil, chalk, and marking gauge. Shape materials to prescribed measurements, using saws, chisels, and planes. Assemble, cut, and shape materials and fasten them together with nails, dowel pins, or glue. Erect framework for structures. Verify trueness of structure with plumb bob and carpenter's level. Apply decorative paneling to walls.

F. The installation of ladders, handrails, walkways, platforms, and gangways made of wood as well as shoring and lagging. Install doors and wood and metal windows and bucks, including hardware (bucks are rough frames in which finished frames are inserted) in building framework and brace them with boards nailed to framework. Install pallet racks and metal shelving. Install subflooring in buildings. Install insulation such as batt, board, safing, thermal, styrofoam, sound attenuation, fiberglass when the installation of the insulation material is not being applied as an integral part of the roofing system. Nail plaster grounds (wood or metal strips) to studding. Fit and nail sheathing on outer walls and roofs on buildings. Install beams and trusses of wood laminate.

G. The making, handling, and setting of all frames, sash, blinds, trim, and other fixtures (for example, cabinets, bookcases, and benches), when made of wood or any wood substitute. The handling and assembly of chairs, seats, bleachers, and benches and other furniture in theaters, halls, schools, and other places of assemblage on floors of any kind. Install protection screens, chalk boards, toilet partitions (plastic laminate, solid plastic). Caulking of fixtures and countertops including Corian tub and shower enclosures.

H. The installation of wood and metal studs and exterior panels.

I. The handling, cutting, sawing, fitting of drywall (sheetrock), and lead-lined drywall whether for walls, ceilings, floors, soffits, or any use, no matter how installed—nailed, screwed, glued, or otherwise (interior, exterior). Lead-lined drywall is used in X rays to avoid radiation exposure. Install corner guards and wooden and plastic column covers.

J. The handling and installation of acoustical and egg crate ceiling systems in its entirety (hanger wire, grid, molding, tile) whether vertically or horizontally installed.

K. The installation of all builders hardware, including door tracks of every description. The installation of all weather strips. The making, fitting, and hanging of fly screens for doors, windows, and other openings.

L. Installation of wood and hollow metal doors, rollup garage doors, overhead doors or rolling fire doors, automatic doors, channel iron door bucks, glass sliding, and bi-fold doors.

M. The installation of access flooring, computer floors, and raised or elevated floors. Install modular headwall units and laboratory casework and fume hoods;

2. Pile Driver—The work falling within the occupational title of work description for pile driver includes:

A. The handling, layout, driving, cutting, and splicing of wood, metal, or concrete piling regardless of purpose (for example, sheets, I-beams, pile caps, and welding to piling);

B. The assembly, disassembly, and rigging of the pile driving equipment; and

C. The conduct of underwater diving that is incidental to pile driving work;

3. Millwright—Applies to workers who design, build, or repair mills or mill machinery; hoist, dismantle, erect, assemble, line, and adjust all machines used in the transmission of power in buildings, factories or elsewhere; unload machines used in the transmission of power in buildings, factories, or elsewhere, where power equipment and rigging are required. The work falling within this occupational title of work description includes: the setting of all classes of engines, direct drive motors, dynamos, turbines, generators, and air compressors and pumps. The assembling, setting, and packing of all compressors and pumps. The placing of all pulleys, sheaves, and fly wheels on the listed equipment. The making and setting of all templates and bolts for all machinery requiring same. Drypacking for sole plates. Installation of truck and railroad scales. Installation of trash compactors. Installation of all types of conveyors. The cutting and threading of all bolts. The handling and operating of all acetylene and devices for heating, welding, and cutting when used in connection with millwright work;

4. Lather—Applies to workers who erect horizontal metal framework to which laths are fastened, using nails, bolts, studgun, or a combination of these, drills holes in floor and ceiling, and drives ends of wooden or metal studs into holes to provide anchor for furring or rockboard laths. The occupational title of lather applies to workers who nail, clip, or fasten, all types of wood, wire, and metal laths, plasterboard, wallboard, rockboard, gypsum, sheetrock, and acoustical materials which take the place of same to walls, ceilings, and partitions of buildings to provide supporting base for plaster, fireproofing, or acoustical material. The occupational title of work description for lather applies to workers who erect all metal plastering accessories which are covered or serve as ground, or both, guard, stock, or screed for plaster materials, including wire mesh. The work falling within the occupational title of work description includes:

A. The installing of carrying bars and purlins (pieces of horizontal timber), light iron, and metal furring (thin strips of wood or metal to create air space) of all descriptions, such as rods, channels, flat iron, T-bar, H-bar, and other ceiling bars or systems for the receipt of lath and board;

B. The wiring of plasterer channels to overhead structural framework to provide support for plaster or acoustical ceiling tile; and

C. The nailing of plaster grounds (wood or metal strips) to studding to provide a guide for those workers performing work falling within the occupational title of work description for plasterer;

5. Linoleum Layer—Applies to workers who measure, cut, sew, make-up and seam, tape, fit, lay, and install and seal and wax materials to be cemented, tacked, or otherwise applied to its base, wherever it may be. These materials may be used as shock-absorbing, sound-absorbing, or decorative coverings. With the exception of terrazzo,

magnesite, and latex built-up floors, the materials include oil cloth, matting, linen, carpet, synthetic turf, linoleum, vinyl, plastic, rubber, cork, mastic, asphalt, mastipave, tile, wood tile, interlocking and magnetic tile, chalk and bulletin board, nonslip or abrasive materials, resilient, decorative seamless surface coatings, monolithic coverings (monolithic shall mean all resilient seamless material such as epoxy, polyethylene, plastics and their derivatives, components and systems), and all other resilient coverings on floors, walls, counters, table tops, and ceilings. The work falling within the occupational title of work description includes:

A. The handling of materials at the point of installation;

B. The performing of all necessary preparation and finish work, such as sweeping, scraping, sanding, or chipping dirt and irregularities from base surfaces and filling cracks with putty, plaster, or cement grout to form smooth, clean foundations, drilling holes for sockets and pins;

C. The installing of underlayment, sanding and filling, fitting of metal edgings, metal corners, and caps and fitting devices for attachment of these materials;

D. The spreading of adhesive cement over floor to cement foundation material to the floor;

E. The laying of covering on cement; and

F. The rolling of finished floor to smooth it out and press cement into base and covering;

(E) Cement Mason (which shall include plasterer)—The work falling within this occupational title of work description includes:

1. Cement Mason - Applies to workers who perform work on concrete where finishing tools are used.

A. The setting of screeds, the rodding (buildings), shaping, smoothing, and finishing of the surfaces of freshly poured concrete floors, walls, sidewalks, curbs, steps, and stairways, the finishing of extruded barrier rails or any other concrete surface requiring finishing, using hand tools or power tools, including floats, trowels, screeds, and straightedge.

B. The removing of rough or defective spots from concrete surfaces, using grinder or chisel and hammer and patching holes with fresh concrete or epoxy compound preparatory to sacking.

C. The molding of expansion joints and edges, using edging tools, jointers, and straightedge.

D. The application of penetrating sealer and primer protective coatings to concrete floors and steps when part of the finishing process.

E. The installation of seamless composition floors and the installation and finishing of epoxy-based coatings or polyester-based linings to all surfaces, when the coatings or linings are applied by spraying or troweling.

F. The sandblasting or water blasting for architectural finish or preparatory to patching.

G. The cutting of joints with concrete saw for the control of cracks in buildings and sidewalks, driveways, and curbs and gutters contiguous to buildings.

H. The setting of concrete curb, gutter, and sidewalk forms one (1) board high up to twelve inches (12");

2. Plasterer – Applies to workers who apply gypsum, Portland cement, stucco, imitation stone, and kindred materials and products to interior walls, ceilings, and partitions and to exterior walls of buildings, and finish those materials and products.

A. The spreading of plaster over laths, masonry, or any other base, using trowel, and smoothing the plaster with darby and float for uniform thickness;

B. The application of the various manufacturers' brand names of thin coat or plaster veneer;

C. The application of all bonding agents and mastical;

D. The roughing of undercoat with wire or metal scraper to provide bond for succeeding coat of plaster;

E. The application of all malleable plastic materials and epoxy materials;

F. The setting in place of plasterboard, insulation board, styrofoam and beadboard, ground, locks, patent dots, cork plates, brownstone and acoustical tile, fiberglass reinforcement and finished products;

G. The plastering of joints, nail holes, and bruises on wallboard;

H. The grouting and filling of door bucks, runners, and similar installations, in conjunction with plastering operations;

I. The application of scratchcoat, browncoat, and finish coat of plaster to wood, metal or board laths successively to all ceilings and walls when finished with terrazzo or tile, and the application of any plastic material to same;

J. The fireproofing of all building assemblies with plaster materials, sprayed fiberglass or similar materials, whether applied to gypsum, metal lath, or directly;

K. The application of crushed stone, marble, or ceramic chips and broken glass where embedded in plaster, or similar materials;

L. The placing of acoustic blocks with any plastic material, regardless of thickness;

M. The placing, by any method, of plaster or composition caps and ornaments;

N. The creating of decorative textures in finish coat by marking surface of coat with brush and trowel or by spattering it with small stones (stucco) where plastering equipment or materials, or both, are used; and

O. The operation and control of all types of plastering machines, including power trowels and floats;

(F) Communications Technician—Applies to workers who install, inspect, repair, and service electronic and telecommunication systems. The work falling within the occupational title of Communication (Electronic/Telecommunication) Technician includes:

1. Installing, repairing, and servicing of radio, television, and recording systems and devices; systems for paging, intercommunication, public address, wired music, clocks, security and surveillance systems, and mobile radio systems; fire alarm and burglar alarm systems;

2. Wiring of low-voltage surface wiring and wiring in nonmetallic conduits and incidental shielded metallic conduit runs of no longer than ten feet (10') nor larger than one inch (1") when required in conjunction with the work listed in this rule;

3. Installing, repairing, servicing, or a combination of these, of the Main Distribution Frame (MDF) where the permanent outside lines entering a building terminate and where the subscriber's line multiple cabling and trunk multiple cabling originate. It is usually located on the ground floor of a building;

4. Installing, repairing, servicing, or a combination of these, of the Intermediate Distribution Frames (IDF), which provides flexibility in allocating the subscriber's number to the line unit or equipment in the office that is to be associated with the particular line. These frames are located on each floor of a building;

5. Installing, repairing, servicing, or a combination of these, of the subpanels (blocks). The subpanels are connecting devices where large feed cables terminate at the distribution frames;

6. Installing, repairing common equipment or key service unit, or a combination of these. This equipment consists of a backboard assembly and an equipment mounting frame, which are utilized for connecting external telephones;

7. Installing, repairing, servicing of the instruments, terminals, and sets, or a combination of these. This equipment is at either end of a circuit, or at a subscriber's or user's terminal;

8. Installing, repairing, servicing, or a combination of these, of the ancillary or add-on equipment such as bells, buzzers,

speakerphones, headsets, automatic dialers, recorders; and

9. Installing, repairing, servicing of the telephone cable, or a combination of these. Telephone cable includes: network channel service cable; riser cables between floors of a building; distribution cables installed on each floor of a building in the floor or the ceiling, and inside wires between the telephone and the connection to the distribution cable;

(G) Electrician—Applies to workers who are responsible for installation, assembly, construction, inspection, operation, and repair of all electrical work within the property lines of any given property (manufacturing plants, commercial buildings, schools, hospitals, power plants, parking lots). This scope of work shall begin at the secondary site of the transformer when the transformer is furnished by the local utility and the service conductors are installed underground. When service conductors are installed overhead in open air from wooden poles, this scope of work shall start immediately after the first point of attachment to the buildings or structures. The work falling within this occupational title of work description includes:

1. Planning and layout of electrical systems that provide power and lighting in all structures. This includes cathodic protection systems utilized to protect structural steel in buildings and parking structures;

2. All handling, moving, loading, and unloading of any electrical materials, materials used in association with an electrical system, electrical equipment, and electrical apparatus on the job site, whether by hand or where power equipment and rigging are required;

3. Welding, burning, brazing, bending, drilling, and shaping of all copper, silver, aluminum, angle iron, and brackets to be used in connection with the installation and erection of electrical wiring and equipment;

4. Measuring, cutting, bending, threading, forming, assembling, and installing of all electrical raceways (conduit, wireways, cable trays), using tools, such as hacksaw, pipe threader, power saw, and conduit bender;

5. Installing wire in raceways (conduit, wireways, troughs, cable trays). This wire may be service conductors, feeder wiring, subfeeder wiring, branch circuit wiring;

6. Chasing and channeling necessary to complete any electrical work, including the fabrication and installation of duct banks and manholes incidental to electrical, electronic, data, fiber optic, and telecommunication installation;

7. Splicing wires by stripping insulation from terminal leads with knife or pliers, twisting or soldering wires together, and applying tape or terminal caps;

8. Installing and modifying of lighting fixtures. This includes athletic field lighting when installed on stadium structures or supports other than wooden poles, or both;

9. Installing and modifying of all electrical/fiber optic equipment (AC-DC motors, variable frequency drives, transformers, reactors, capacitors, motor generators, emergency generators, UPS equipment, data processing systems, and annunciator systems where sound is not a part thereof);

10. Installing of raceway systems utilizing conduit, conduit bodies, junction boxes, and device boxes for switches and receptacles. This also may include wiring systems utilizing other methods and materials approved by the *National Electrical Code* (MC cable, AC cable, BX, or flexible metal tubing or electrical nonmetallic tubing);

11. Installing of main service equipment, distribution panels, subpanels, branch circuit panels, motor starters, disconnect switches, and all other related items;

12. Installing and wiring of instrumentation and control devices as they pertain to heating, ventilating, air conditioning (HVAC) temperature control and energy management systems, building automation systems, and electrically or fiber optic operated fire/smoke detection systems where other building functions or systems are controlled;

13. Installing conduit or other raceway greater than ten feet (10') when used for the following: fire alarm systems, security systems, sound systems, closed circuit television systems or cable television systems, or any system requiring mechanical protection or metallic shielding (telephone systems);

14. Testing continuity of circuit to insure electrical compatibility and safety of components. This includes installation, inspecting, and testing of all grounding systems including those systems designed for lighting protection; and

15. Removing electrical systems, fixtures, conduit, wiring, equipment, equipment supports, or materials involved in the transmission and distribution of electricity within the parameters of the building property line if reuse of any of the existing electrical system is required. This may include the demolition and removal and disposal of the electrical system;

(H) Elevator Constructor—Applies to workers who assemble and install electric and hydraulic freight and passenger elevators, escalators, dumbwaiters, and moving walks. The work falling within this occupational title of work description includes:

1. The handling, unloading, and hoisting of all equipment to be assembled or installed by workers performing work within this occupational title of work description, from the time that equipment arrives at, or near the building site;

2. The wrecking or dismantling of elevator plants, to include elevators, escalators, dumbwaiters, moving walks, and all other equipment to be reused and assembled or installed by workers performing work within this occupational title of work description;

3. The sinking, drilling, boring, digging cylinder wells, or backfilling for hydraulic lifts, hydraulic elevators, or screw lifts;

4. The layout, erecting and assembling of all elevator equipment (for example, electric, hydraulic, steam, belt, compressed air, and hand-powered elevators; dumbwaiters, residence elevators, parking garage elevators), and the assembly of all escalators, moving walks and link belt carriers;

5. The erecting and assembly of all theater stage and curtain equipment and guides and rigging to them, organ consoles, and orchestra elevators;

6. The installing of all wiring, conduit, and raceways from the first point of attachment of main feeder terminals on the controller to other apparatus and operating circuits;

7. The operating of temporary cars; and

8. The installing of all elevator enclosures, fronts, fascias, sills, frames, and bucks;

(I) Glazier—Applies to workers who select, cut, prepare, handle, install, or remove all window glass, plate, and all other types of glass, including structural glass, mirror glass, tempered and laminated glass, safety or protection glass, all types of insulating glass units, all plastics or other similar materials when used in place of glass and when set or glazed with putty, moulding rubber, cement, lead, and all types of mastic, or other materials used in place of same. The workers performing work within this occupational title of work description install these materials in windows, louvers, doors, partitions, skylights, and on building fronts, walls, ceilings and tables, whether the materials are set in wood, stone, cement, or metal of all types. The work falling within the occupational title of work description includes:

1. The installing of mirrors of all types;

2. The marking of an outline or pattern on glass and cut glass with a glasscutter;

3. The breaking off of excess glass by hand or with a notched tool;

4. The fastening of glass panes into wood sash with glazier's points, and the spreading smooth of putty around the edge of panes with a knife to seal joints;

5. The installing of metal window and door frames into which glass panels are to be fitted or sliding windows. The bolting of metal hinges, handles, locks, and other hardware to prefabricated glass doors;

6. The installing of mirror or structural glass on building fronts, walls, ceilings or tables, using mastic, screws, or decorative moulding;

7. The installing of metal-framed glass enclosures for showers, bathtubs, and skylights; and

8. The installing, cutting, and removal of all window glass, plate, and all other types of glass, including structural glass, mirror glass, tempered and laminated glass, safety or protection glass, all types of insulating glass units, all plastics or other similar materials when used in place of glass and when set or glazed with putty, molding rubber, cement, lead, and all types of mastic, or other materials used in place of same;

(J) Ironworker—Applies to workers who perform work in connection with field fabrication, erection, or both, installation, removal, wrecking, and dismantling of structural, architectural, and reinforcing iron and steel, ornamental lead, bronze, brass, copper, and aluminum, and plastics or other materials when used in place of them. The work falling within the occupational title of work description includes:

1. Structural. The unloading, erecting, bolting-up, plumbing-up, welding, and installing of structural steel, including any field fabrication;

2. Reinforcing. The unloading, carrying, placing, and tying of all concrete reinforcing, such as re-bar, wire mesh, expanded metal or post tensioning cable (including the tension process) or prestress cables when installed on the job site;

3. Rigging. The unloading, moving, handling, placing, and setting of electrical machinery and equipment when rigging or power equipment, or both, is used (with the exception of setting of electric motors). The assembly and erection of radio and television and other structural steel towers (with the exception of electrical transmission towers). The unloading, handling, moving, and placing of machinery to be assembled or dismantled, erected, or installed to its approximate position (over the anchor bolts);

4. Windows. The installation of metal windows (with the exception of store fronts display windows), curtain walls, and metal panels. The caulking of metal-to-metal joints and metal-to-brick;

5. Doors. The erection of curtain type doors (overhead rolling-type doors), heavy industrial doors when made of metal, fire doors, and exterior metal hinged doors that carry a fire underwriters label are erected by iron workers;

6. Sheeting and decking. The installation of sheeting which is attached to metal framework including metal floor decking;

7. Metal buildings. The erection and installation of structural steel and sheet metal packaged buildings when they come in a package unit, such as Butler, Delta, Varco Prudent, or other name brand packaged buildings. The installation of all doors, windows, and insulation (when installed in conjunction with sheeting) in the packaged buildings. The installation of metal siding and metal roof decking, regardless of the fastening method or the object to which it is fastened;

8. Elevators. The installation of elevator doors for gates manually operated and all elevator enclosures, fronts, fascias, sills, frames, and bucks;

9. Precast. The unloading and installation/erection of precast bridge girders, single T's, double T's, top panels, and tilt-up slabs; and

10. Other. The installation of all catwalks, stairways, and hand rails made of aluminum, bronze, or any type of metal, glass or plastic. The installation of ornamental iron, such as revolving doors, gates, handrails, window grills, jail and cell work, and chain link fences. The installation of dry storage bins, hoppers, chutes, and conveyors where sand ore, coal, or any dry component is stored or transferred. The erection, installation, removal, wrecking, and dismantling of bridges, viaducts, cableways, tramway, monorail transportation systems. The erection, installation, removal, wrecking, and dismantling of locks, gates, metal forms, railings (including pipe). The erection, installation, removal, wrecking, and dismantling of frames in support of boilers. The installation of metal siding and metal roof decking, regardless of the fastening method, or the object to which it is fastened. The handling, burning, welding, and tying of all materials used to reinforce concrete structures. The installation and erection of TV and microwave towers, self-supporting towers, or guy towers. The installation of metal guardrails with metal posts and highway signage;

(K) General Laborer (including first semi-skilled laborer and second semi-skilled laborer)—Consists of providing routine manual labor. This work encompasses several subclassifications, with the title and work description considered in light of whether the public works project pertains to building construction or heavy/highway construction.

1. Building construction. The subtitles falling within the occupational title of work description for laborer, as applicable to building construction, are as follows:

A. Laborer. The work falling within this subtitle of work description includes:

(I) Being included in one (1) of the following categories: flagmen, heaters, material plant man, carpenter tender, landscaper, signalman, wrecker (old/new structures), form handler, or posthole digger;

(II) Cleaning and clearing of all debris for all crafts, loading and unloading, conveying, distributing, construction material by hand and collecting and hoisting debris, backfilling, grading, and landscaping by hand;

(III) Covering of tanks, structures, and material piles with tarpaulins or other materials. Cleaning of masonry and other type walls and windows. Signaling and hoisting concrete buckets and for all other material handled by workers falling within the occupational title of work description for laborer;

(IV) Providing drinking water. Handling and cleaning of concrete chutes. Cleaning of concrete spills and chipping where hand tools are required. Performance of work necessary in remedying defects in concrete caused by leakage, bulging, sagging, or shifting of forms when finishing tools are not used. Jackhammer and paving breaker, air compressors, motor buggies, pumps (removal of water), except set-up men and nozzle men, chipping tool operator, concrete mixer operator (up to and including two- (2-) bag capacity); and

(V) Laying nonpressurized pipe for downspout drain lines, header lines, or laying of nonpressurized conduit, or a combination of these, for the carrying of storm water, waste, sewage, gravity flow lines, catch basins and manholes, effluent lines, originating outside the building and all those lines originating inside the building at the first Y, T, or connection outside the building;

B. First semiskill laborer. The work falling within this subtitle of work description includes: hod-carriers, plasterers, and cement mason tenders (who assist bricklayers, plasterers, and cement masons). The mixing, packing, wheeling, and tempering of mortar and fire clay. The mixing, handling and conveying of all other materials used by bricklayers, plasterers, and cement masons (for example, brick, tile, stone and cast stone), whether done by hand or using a forklift (walk behind or similar types). Building of scaffolds, trestles, boxes, and swinging staging for bricklayers, plasterers, and cement masons; and

C. Second semiskill laborer. The work falling within this subtitle of work description includes: concrete pump set-up men and nozzle men, tile layers and bottom men, on sewers and drains, cutting torch, and burning bar (demolition), trench, or pier holes twelve feet (12') or over, wagon drill, air track or any mechanical drill, powder man, tamper, one hundred pounds (100 lbs.) or over, laborers working for mechanical and electric contractors (including but not limited to digging of all trenches, ditches, holes, paving of concrete, and cleaning of all trash),

paving breaker, jackhammer and vibrator, laser beam man for sewer, grade checker for roads and railroads, asbestos removal (except mechanical systems that are not being scrapped and any type of roofing where the roof is to be relaid), hazardous waste removal, disposal work, or any combination of these.

2. Heavy/highway construction. The subtitle falling within the occupational title of work description for general laborer, as applicable to heavy/highway construction, are as follows:

A. Laborer. The work falling within this subtitle of work description includes: carpenters tenders, salamander tenders, dump man, ticket takers, flagman, loading trucks under bins, hoppers and conveyors, track men, cement handler, dump man on earth fill, Georgia buggie man, material batch hopper man, spreader on asphalt machine, material mixer man (except on man holes), coffer dams, riprap pavers—rock, block, or brick, signal man for materials handled by laborers, scaffolds over ten feet (10') not self-supported from ground up, skipman on concrete paving, wire mesh setters on concrete paving, work in connection with nonpressurized pipelines, such as nonpressured sewer, water, gas, gasoline, oil, drainage pipe, conduit pipe, tile, and duct lines and other nonpressurized pipelines; power tool operator; work performed by hand in connection with hydraulic or general dredging operations, form setters (curb and gutter), puddlers (paving only), straw blower nozzleman, asphalt plant platform man, chuck tender, crusher feeder, men handling creosote ties or creosote materials, men working with and handling epoxy material(s), topper of standing trees, feeder man on wood pulverizers, board and willow mat weavers and cable tiers on river work, deck hands, guardrail and temporary signs, pile dike and revetment work, all laborers working on underground tunnels less than twenty-five feet (25') where compressed air is not used, abutment and pier hole men working six feet (6') or more below ground, men working in coffer dams for bridge piers and footings in the river, Barca tamper, Jackson or any other similar tamp, cutting torch man, liners, curb, gutters, ditchliners, hot mastic kettleman, hot tar applicator, hand blade operators and mortar men on brick or block manholes, rubbing concrete, air tool operator under sixty-five pounds (65 lbs.), caulker and led man, chain or concrete saw under fifteen horsepower (15 HP). The unloading, handling, and carrying of concrete reinforcing bars, by hand, to the areas in which they are used, wrecking, stripping, dismantling, cleaning, moving, and oiling of all concrete forms; digging and laying sewer tile; and

B. Skilled laborer. The work falling within this subtitle of work description includes: vibrator man, asphalt raker, head pipe layer on sewer work, batterboard man on pipe and ditch work, cliff scalers working from Bosun's chairs, scaffolds, or platforms on dams or power plants over ten feet (10') high, air tool operator over sixty-five pounds (65 lbs.), stringline man on concrete paving and the like, sandblast man, laser beam man, wagon drill, churn drill, air track drill, and all other similar type drills, jackhammers, and other pneumatic hammers and tampers, Gunite nozzle man, pressure grout man, screed man on asphalt, concrete saw fifteen (15) HP and over, grade checker, stringline man on electronic grade control, manhole builder, dynamite man, powder man, welder, tunnel man waterblaster—one thousand pounds per square inch (1000 psi) over, asbestos (except mechanical systems that are not being scrapped), hazardous waste removal, disposal, or any combination of these;

(L) Mason (which shall include marble mason, marble finisher, terrazzo worker, terrazzo finisher, tile setter, and tile finisher).

1. Marble Mason-Terazzo Worker—The work falling within the occupational title of work description for Marble Mason-Terazzo Worker includes:

A. The installing of marble, mosaic, venetian enamel, and terrazzo; the cutting and assembling of mosaics and art ceramics; the casting of all terrazzo on the job site; all rolling of terrazzo work;

B. The preparing, cutting, layering, or setting of metal, composition, or wooden strips and grounds on all bedding above concrete floors or walls; and the laying and cutting of metal, strips, lath, or other reinforcement, where used in terrazzo work;

C. The installing of cement terrazzo, magnesite terrazzo, dex-o-tex terrazzo, epoxy matrix terrazzo, exposed aggregate. Rustic or rough wash of exterior or interior of buildings. The mixturing or applying of any other kind of mixtures of plastics composed of chips or granules of marble, granite, blue stone, enamel, mother of pearl, quartz ceramic colored quartz, and all other kinds of chips or granules when mixed with cement, rubber, neoprene, vinyl, magnesium chloride, or any other resinous or chemical substances used for seamless flooring systems. The applying of binding materials when used on walls, floors, ceilings, stairs, saddles, or any other part of the interior or exterior of the building, or other work not considered a part of the building such as fountains, swimming pools;

D. The finishing of cement floors where additional aggregate of stone is added by spreading or sprinkling on top of the finished base and troweled or rolled into the finish and then the surface ground by grinding machines (When no additional stone aggregate is added to the finished mixture, even though the surface may be ground, the work falls within the occupational title of work description for cement masons.); and

E. The carving, cutting, and setting of all marble, slate, including slate backboards, stone, albereen, carrara, sanionyx, vitrolite, and similar opaque glass, scaglioa, marbleithic, and all artificial, imitation, or case marble of whatever thickness or dimension. This shall apply to all interior work, such as sanitary, decorative, and other purposes inside of buildings of every description wherever required, including all polish, honed, or sand finish.

2. Marble Finisher—The work falling within the occupational title of work description for Marble Finisher includes:

A. The preparation of floors and/or walls by scraping, sweeping, grinding, and related methods to prepare surface for Marble Mason installation of construction materials on floor and/or walls; the movement of marble installation materials, tools, machines, and work devices to work areas; the erection of scaffolding and related installation structures;

B. The movement of marble slabs for installation; the drilling of holes and the chiseling of channels in edges of marble slabs to install wall anchors, using power drill and chisel; the securing of marble anchors to studding, using and covering ends of anchors with plaster to secure anchors in place;

C. The supply and mixture of construction materials for Marble Mason; the mixture of grout, as required, following standard formulas and using manual or machine mixing methods; the application of grout to installed marble; the movement of mixed mortar or plaster to installation area, manually or using wheelbarrow;

D. The removal of excess grout, using wet sponge; the cleaning of installed marble surfaces, work and storage areas, installation tools, machinery, and work aids, using water and cleaning agents;

E. The modification of mixing, material moving, grouting, polishing, and cleaning metal pieces, using a torch, spatula, and heat sensitive adhesive and filler;

F. The removal of marble installation materials and related debris from immediate work area; the storing of marble, installation material tools, machines, and related items; and

G. The provision of assistance to Marble Mason with the following tasks: bending or forming of wire to form metal anchors, using pliers; inserting anchors into holes of marble slab; securing anchors in

place with wooden stakes and plaster; selecting marble slab for installation following numbered sequences or drawings; grinding and polishing marble, using abrasives, chemical and/or manual, in machine grinding and/or polishing techniques, under Marble Mason's direction; the moving and positioning of marble.

3. Terrazzo Finisher—The work falling within the occupational title of work description for Terrazzo Finisher includes:

A. The preparation of floors and/or walls by scraping, sweeping, grinding, and related methods to prepare surface for Terrazzo Worker installation of construction materials on floors, base, and/or walls; the moving of terrazzo installation materials, tools, machines, and work devices to area, manually or using wheelbarrow;

B. The supply and mixture of construction materials for Terrazzo Worker; the preparation, mixture by hand, mixture by mixing machine, or transportation of premixed materials and the distribution with shovel, rake, hoe, or pail, of all kinds of concrete foundations necessary for mosaic and terrazzo work; the dumping of mixed materials that form base or top surface of terrazzo into prepared installation site, using wheelbarrow; the measuring of designated amounts of ingredients for terrazzo or grout, using graduated containers and scale, following standard formulas and specifications, and the loading of portable mixer using proper means of transport; the mixture of materials according to experience and requests from Terrazzo Worker;

C. The spreading of marble chips or other material over fresh terrazzo surface and the pressing of the material into terrazzo by use of a roller; the application of grout finishes to surfaces of installed terrazzo; the spreading of grout across terrazzo to finish surface imperfections, using trowel; the installation of grinding stones in power grinders, using hand tools; the fine grinding and polishing of the surface of terrazzo, when grout has set, using power grinders; the application of curing agent to installed terrazzo to promote even curing, using brush or sprayer; the cutting of grooves in terrazzo stairs, using power grinder, and the filling of grooves with nonskid material;

D. The modification of mixing, grouting, grinding, and cleaning position and the securing of moisture membrane and wire mesh prior to pouring base materials for terrazzo installation;

E. The washing of the surface of polished terrazzo, using cleaner and water, and the application of sealer, according to manufacturer specifications, using brush; the cleaning of the installation site, and storage areas, tools, machines, and equipment; the removal of Terrazzo Worker materials and related debris from immediate work area; and

F. The provision of assistance to Terrazzo Worker with the following tasks: grinding surfaces of cured terrazzo; using power grinders.

4. Tile Setter—The work falling within the occupational title of work description for Tile Setter includes:

A. The application of tile to floors, walls, ceilings, stair treads, promenade roof decks, garden walks, swimming pools, and all places where tiles may be used to form a finished surface for practical use, sanitary finish, or decorative purpose. (Tile includes all burned clay products, as used in the tile industry, either glazed or unglazed, all composition materials; all substitute materials in single units up to and including, fifteen inches by twenty inches by two inches (15" × 20"× 2") (except quarry tiles larger than nine inches by eleven inches (9" × 11")) and all mixtures in the form of cement, plastics, and metals that are used as a finished surface.);

B. The cutting and shaping of tile with saws, tile cutters, and biters; and

C. The positioning of tile and tapping it with a trowel handle to affix tile to plaster or adhesive base.

5. Tile Finisher—The work falling within the occupational title of work description for Tile Finisher includes:

A. The preparation of floors and/or walls by scraping, sweeping, grinding, and related methods for Tile Setter to install construction materials on floors and walls; the movement of tiles, tile setting tools, and work devices from storage area to installation site manually or using wheelbarrow;

B. The supply and mixture of materials for Tile Setter; the supply and mixture of construction materials for Tile Setter; the mixture of mortar and grout accordingly to standard formulas and request from Tile Setter using bucket, water hose, spatulas, and portable mixer; the modification of mixing, grouting, grinding, and cleaning procedures according to type of installation or material used; the supply to Tile Setter of mortar, using wheelbarrow and shovel; the application of grout between joints of installed tile, using grouting trowel; the application of grout; the cutting of installed tile;

C. The removal of excess grout from tile joints with a sponge and scraping of corners and crevices with a trowel; the application of caulk, sealers, acid, steam, or related agents to caulk, seal, or clean installed tile, using various application devices and equipment;

D. The wiping of surfaces of tile after grouting to remove grout residue and polish tile, using non-abrasive materials; the removal of Tile Setter materials and related debris from immediate work area; the cleaning of installation site, mixing and storage tools, and equipment, using water and various cleaning tools; the storing of tile setting material machines, tools, and equipment; and

E. The provision of assistance to Tile Setter to secure position of metal lath, wire mesh, felt paper, Dur/rock or wonderboard prior to installation of tile;

(M) Operating Engineer (which shall include operating engineer group I, operating engineer group II, operating engineer group III, operating engineer group III-A, operating engineer group IV, and operating engineer group V)—Applies to workers who perform work falling within the occupational title of work description for operating engineer/portable and hoisting operator, monitor, and control, repair, modify, assemble, erect, oil, service each or all electrically or electronically, hydraulically, or any power-operated equipment. This occupational title encompasses several subclassifications, with the title and work description considered in light of whether the public works project pertains to building construction or heavy/highway construction.

1. Building construction. The subtitles falling within the occupational title of work description for operating engineer, as applicable to building construction, are as follows:

A. Group I—This subtitle applies to workers who operate, monitor, and control, repair, modify, assemble, erect, oil, service each or all electrically or electronically, hydraulically, or any power-operated equipment set forth as follows: crane (for example, crawler or truck); dragline—clam shell—gradall; Derrick (all types); kimmer scoop; power shovel or backhoe over one (1) cubic yard; pile driver (for example, land or floating); Whirley; mechanic and welder; hydraulic, self-propelled crane; stinger or cherry picker crane; switch boat; concrete portable plant/concrete mixer paver; cableways;

B. Group II—This subtitle applies to workers who operate, monitor, and control, repair, modify, assemble, erect, oil, service each or all electrically or electronically, hydraulically, or any power-operated equipment set forth as follows: asphalt paver and spreader/concrete spreader; asphalt plant mixer operators; asphalt plant operator; backfillers; back hoe (under one (1) cubic yard); Barber-Green loader (similar type); blade—power, all types; boats—power; boilers; boring machine (all types, including tunnel boring); brooms—power operated (all types); concrete saw (self-propelled); chip spreader (front man); clef plane operators; combination concrete hoist and mixer such as mix or mobile; crab—power operated; crusher rock; ditching machine; dozer/dredges;

finishing machine; firemen on rigs; flex plane; floating machine; form grader; greaser; hoist operator (all types); hopper—power operated; hydra hammer (all types); Lad-A-Vator—similar type; loaders—all types, including skid-steer (for example, Bobcat); locomotives (all types); curb finishing machine; mucking machine; orange peels; pumps (all types); push cats; rollers (all types); scoops (all types except skimmer scoop); self-propelled rotary drill; air compressors (all types); side boom; siphons, jets, and jennies; welding machine; subgrader; testhole machine; throttle man tractors over fifty (50) HP; air tugger with air compressor; anchor placing barge; Ahoy force feeder loader (self-propelled); bull float; pipe cleaning/wrapping machine; conveyor; heaters, fuel fired with forced air; quadtrack; tie tamper; vibrating machine; well drilling machine; forklift (except masonry forklift);

C. Group III—This subtitle applies to workers who operate, monitor, and control, repair, modify, assemble, erect, oil, service each or all electrically or electronically, hydraulically, or any power-operated equipment set forth as follows: tractors (under fifty (50) HP); distributor (bituminous); scissor lift; small machine (operator); mud jack; wench truck operator; pug mill operator; elevator-push button; A-frame truck; mixers; oilers;

D. Group III-A—This subtitle applies to workers who operate, monitor, and control, repair, modify, assemble, erect, oil, service each or all electrically or electronically, hydraulically, or any power-operated equipment set forth as a masonry forklift;

E. Group IV—This subtitle applies to workers who operate, monitor, and control, repair, modify, assemble, erect, oil, service each or all electrically or electronically, hydraulically, or any power-operated equipment set forth as a self-propelled floor sweeper; and

F. Group V—This subtitle applies to workers who operate, monitor, and control, repair, modify, assemble, erect, oil, service each or all electrically or electronically, hydraulically, or any power-operated equipment set forth as follows: elevator—auto; air pressure oiler; air pressure engineer.

2. Heavy/highway construction. The subtitles falling within the occupational title of work description for operating engineer, as applicable to heavy/highway construction, are as follows:

A. Group I—This subtitle applies to workers who operate, monitor, and control, repair, modify, assemble, erect, oil, service each or all electrically or electronically, hydraulically, or any power-operated equipment set forth as follows: asphalt finishing machine and trench; widening spreader; asphalt plant console operator; autograder; automatic slipform paver; backhoe; blade operator (all types); boat operator (all types); boilers—two (2); central mix concrete plant operator; clamshell operator; concrete mixer paver; crane operator; Derrick or Derrick trucks; ditching machine; dozer operator; dragline operator; dredge booster pump; dredge engineman; dredge operator; drill cat with compressor mounted on cat; drilling or boring machine rotary self-propelled; high-loader including skid steer (for example, Bobcat); hoisting engine—two (2) active drums; launchhammer wheel; locomotive operator—standard gauge; mechanics and welders; mucking machine; piledriver operator; Pitman crane operator; push cat operator; quadtrack; scoop operator—all types; shovel operator; sideboom cats; skimmer scoop operator; trenching machine operator; truck crane;

B. Group II—This subtitle applies to workers who operate, monitor, and control, repair, modify, assemble, erect, oil, service each or all electrically or electronically, hydraulically, or any power-operated equipment set forth as follows: A-frame truck; asphalt hot mix silo; asphalt plant fireman, drum or boiler; asphalt plant mixer operator; asphalt plant man; asphalt roller operator; backfiller operator; Barber-Greene loader; chip spreader; concrete mixer operator, skip loader; concrete plant operator; concrete pump operator; crusher operator; dredge oiler; elevating grader operator; forklift; greaser—fleet; hoisting engine—one (1); locomotive operator—narrow gauge; multiple compactor; pavement breaker; power-broom—self-propelled; power shield; rooter; side discharge concrete spreader; slip form finishing machine; stumpcutter machine; throttle man; tractor operator—over fifty (50) HP; winch truck;

C. Group III—This subtitle applies to workers who operate, monitor, and control, repair, modify, assemble, erect, oil, service each or all electrically or electronically, hydraulically, or any power-operated equipment set forth as follows: boilers—one (1); chip spreader (front man); churn drill operator; clef plane operator; concrete saw operator self-propelled; curb finishing machine; distributor operator; finishing machine operator; flex plane operator; float operator; form grader operator; pugmill operator; roller operator, other than high-type asphalt; screening and washing plant operator; siphons and jets; subgrading machine operator; spreader box operator, self-propelled (not asphalt); tank car heater operator—combination boiler and booster; tractor operator fifty (50) HP or less; Ulmac, Ulric, or similar spreader; vibrating machine operator, not hand;

D. Group IV—This subtitle applies to workers who operate, monitor, and control, repair, modify, assemble, erect, oil, service each or all electrically or electronically, hydraulically, or any power-operated equipment set forth as an oiler or oiler-driver (fireman—rig; maintenance operator);

(N) Outside- lineman, lineman operator, groundman, lineman tree trimmer, groundman tree trimmer, and any combination thereof.

1. Outside-lineman—Applies to workers who erect and repair transmission poles (whether built of wood, metal, or other material), fabricated metal transmission towers, outdoor substations, switch racks, or similar electrical structures, electric cables, and related auxiliary equipment for high-voltage transmission and distribution powerlines used to conduct energy between generating stations, substations, and consumers. The work (overhead and underground) falling within this occupational title of work description includes:

A. Construction, repair, or dismantling of all overhead and underground electrical installations. The handling and operation of all equipment used to transport men, tools, and materials to and from the job site. The framing, trenching, digging, and backfilling of vaults, holes and poles, and anchors (by hand or mechanical equipment), guying, fastening to the stub-in on concrete footings or pads, assembling of the grillage, grounding of all structures, stringing overhead wire, installing underground wire, splicing, and installation of transformers;

B. Construction and repair of highway and street lighting and traffic signal systems, cathodic protection systems, and ball field lighting systems;

2. Lineman operator—Operates equipment used on the outside line portion of a project. The lineman operator assists linemen in the performance of their work but does not climb or work out of any type of aerial lift equipment. The lineman operator does not perform any work that requires the use of hand tools;

3. Groundman—Work performed on the ground to assist the journeymen outside line construction/lineman on work not energized. Groundmen use jack hammers, air drills, shovels, picks, tamps, trenching equipment, and other such tools for excavating and/or compacting dirt or rock on the outside line portion of a project but do not use hand tools;

4. Lineman tree trimmer—Trimming and removal of trees, stumps, limbs, brush, and other related tasks in and around electrical systems by use of chainsaws, pruners, pole saws, and hand saws only when specifically required to provide clearance and right-of-way preparation for installation of overhead or underground high-voltage electric

utility lines, and excluding the clearance of right-of-ways related to heavy-highway construction or other public projects not directly related to the installation of electrical utility lines. Lineman tree trimmer work may be performed on the ground and in the air; and

5. Groundman tree trimmer—Assists the lineman tree trimmer in the performance of their work using rakes, chainsaws, chippers, and industrial mowers in and around electrical systems only when specifically required to provide clearance and right-of-way preparation for installation of overhead or underground high-voltage electric utility lines, and excluding the clearance of right-of-ways related to heavy-highway construction or other public projects not directly related to the installation of electrical utility lines. Groundman tree trimmer work is only performed on the ground;

(O) Painter—The work falling within the occupational title of work description for painter includes:

1. Preparation of surfaces. The washing, cleaning, pointing, and taping of drywall, regardless of material used, and smoothing of surfaces, using sandpaper, brushes, or steel wool. The removal of old paint or other coatings from surfaces, using paint remover, scraper, wire brushing, sandblasting, water blasting, liquid steam, or by any other similar process. The filling of nail holes, cracks, and joints with putty, plaster, or other fillers;

2. Color matching and mixing. The application of paint, varnish, stain, enamel, lacquer, vinyl, wallpaper, and other materials of whatever kind of quality applied to walls or ceilings with paste or adhesive, using brushes, spray gun (spray painter), or paint rollers. The application of polyurethane elastomers, vinyl plastics, neoprene, resin, polyester, and epoxy as waterproofing or protective coatings to any kind of surface (except roofs) when applied with brushes, spray guns, or rollers;

3. Texturing and decorating. The erecting of scaffolding or setting up of ladders to perform the work above ground level. The paperhanging of walls and ceilings with decorative wall coverings made of fabric, vinyl, or paper. The preparing of the surface to be covered by applying sizing, which seals the surface and makes the covering stick better. The removal of the old covering by soaking, steaming, or applying solvents. The patching of holes and other imperfections before applying the new wall covering. The measuring of the area to be covered; the cutting of the covering into strips of the proper size, the checking of the covering for flaws and the examination of the pattern so it can be matched when the strips are hung. The preparation of paste or other adhesives according to manufacturers' directions, and the brushing or rolling it on the covering. The placing of the strips on the wall or ceiling, to match adjacent patterns. The smoothing of the strips to remove bubbles and wrinkles; the trimming of the top and bottom with a razor blade; and the painting or taping of highway striping, or both; and

4. Cleanup. The cleanup of tools and equipment required in connection with work falling within this occupational title;

(P) Plumber (which shall include pipe fitter).

1. General Plumber—Applies to workers who install and repair domestic potable water lines, gravity waste disposal systems inside the curb or fence lines, plumbing fixtures such as: bathtubs, sinks, and toilets—and appliances such as, dishwashers and water heaters. The work falling within the occupational title of work description for plumber includes:

A. Assembling and installing piping systems, fixtures and equipment for the transportation of domestic water and sewage. Piping systems installed in structures (for example, buildings, industrial plants) to the first Y, T, or connection located outside the building;

B. Cutting, threading, and bending pipe. Joining pipes by use of screws, bolts, fittings, solder, welding brazing, and caulking or any other method of making joints in the plumbing industry;

C. Assembling, installing, and repairing valves, pipe fittings, and pumps. Testing the piping system. Installing and repairing plumbing fixtures, such as sinks, bathtubs, water heaters, and water softeners; and

D. Cutting holes in floors and walls for pipes with point and hammer, core drill, or both.

2. Pipe Fitter—Applies to workers who fabricate, install, and repair piping systems to include: water and waste processing systems; heating and air-conditioning systems, pneumatic controls, and pneumatic delivery systems; powerhouse and all pressurized piping systems; gas, oxygen systems; gasoline systems not for public sale. The work falling within this occupational title of work description includes:

A. Piping systems installed in structures (for example, buildings, industrial plants, and the like);

B. Cutting, threading, and bending pipe. Joining pipes by use of screws, bolts, fittings, solder, welding, and caulking, or any other method of making joints in the pipefitting industry;

C. Assembling, installing, and repairing valves, pipe fittings, and pumps. Testing the piping system. Cutting holes in floors and walls for pipes with point and hammer, core-drill, or both;

D. Installing of distribution lines (for example, water mains, sewer mains, oil and gas lines);

E. Welding of steel pipe joints and joining pipes with screws, bolts, fittings, solder, caulking, or any other method for making joints in the industry; and

F. Joining ductile iron and plastic pipes by using any method for making joints in the industry, when the pipe will be under pressure;

(Q) Roofer—Applies to workers who apply and install any and all types of roofing materials, other than sheet metal. The work falling within this occupational title of work description includes:

1. The installation of slate and tile and all substitute materials taking the place of slate and tile used for roofing including flat or promenade slate, with necessary metal flashing to make water-tight;

2. The cementing in, on, or around slate and tile roofs. The laying of felt or paper beneath the slate and tile. The dressing, punching, and cutting of all roof slate or tile either by hand or machinery;

3. The installation of all forms of plastic, slate, slag, gravel; asphalt and composition roofing; rock asphalt mastic when used for damp and waterproofing; prepared paper; compressed paper and chemically prepared paper, and burlap with or without coating. The installation of all damp resisting preparations regardless of the method of application in or outside of building. The installation of damp courses, sheeting, or coating on foundation work and tarred roofs. The laying of the tile or brick, when laid in asphalt or pitch tar;

4. The installation and application of new materials used in roofing, water-proofing, encapsulation, and containment process including all forms of elastomeric or plastic (elastoplastic), or both, roofing systems, both sheet and liquid applied, whether single-ply or multi-ply. The installation of aggregates or stone, used as a ballast for inverted roofing membrane assembly, or roof of similar construction where insulation is laid over the roofing membrane. The sealing and caulking of seams and joints on these elastoplastic systems to insure water-tightness. The applying of liquid-type elastoplastic preparation for roofing, damp, or waterproofing when applied with a squeegee, trowel, roller, or spray equipment whether applied inside or outside of a building. The priming of surfaces to be roofed, damp, or waterproofed, whether done by roller, mop, swab, three- (3-) knot brush, or spray systems. The waterproofing of all types of preformed panels;

5. The application of all types of spray-in-place such as urethane or polyurethane, and the coatings that are

applied over them;

6. The application of roof insulation, when the insulation material is applied as an integral part of the roofing system, whether the insulation material is applied as the first, last, or any other layer in between;

7. The operation and servicing of all kettles, bulk tankers, stationary heating tankers, and other types of equipment and tools used to accomplish this work (including heating systems for the operation of the equipment); and compressors for applying roofing material components, roof and mop carts, hydraulics, tools and equipment, be it hand or power, needed to apply waterproofing, insulated, and roofing materials;

8. The handling, hoisting, and storing of all roofing, damp, and waterproofing materials; and

9. The tear-off, removal, or both, of any type of roofing, all spudding, sweeping, vacuuming, cleanup, or a combination of these, of any areas of any type where a roof is to be relayed;

(R) Sheet Metal Worker—The work falling within the occupational title of sheet metal worker includes:

1. The handling, conditioning, assembling, installing, servicing, repairing, altering, and dismantling of the duct work for the heating, ventilation, and air-conditioning systems regardless of the materials used and the setting of all equipment and all supports and reinforcements in connection with the system;

2. The installation of expansion and discharge valves, air filters, and water filters in heating, ventilation, and air-conditioning systems;

3. The testing and balancing of air-handling equipment and duct work;

4. The forming, rolling, drawing, stamping, or pressing of sheet metal shingles, sheet metal tile, sheet metal brick, sheet metal stone, and sheet metal lumber, when specified for use as roofing, siding, waterproofing, weather proofing, fire proofing, or for ornamental or any other purpose;

5. The performing of sheet metal work specified for use in connection with or incidental to steeples, domes, minarets, look outs, dormers, louvers, ridges, copings, roofing, decking, hips, valleys, gutters, outlets, roof flanges, flashings, gravel stops, leader heads, down spouts, mansards, balustrades, skylights, cornice moulding, columns, capitals, panels, pilasters, mullions, spandrils, and any and all other shapes, forms and design of sheet metal work specified for use for waterproofing, weatherproofing, fire proofing, ornamental, decorative, or display purposes, or as trim on exterior of the buildings;

6. The installing of sheet metal ceilings with cornices and mouldings of plain, ornamental, enameled, glazed, or acoustic type;

7. The installing of side walls, wainscoting of plain, ornamental, enameled, or glazed types, including sheet metal tile;

8. The application of all necessary wood or metal furring, plastic, or other materials, to which they are directly applied;

9. The performing of sheet-metal work specified for use in connection with or incidental to direct, indirect, or other types of heating, ventilating, air-conditioning, and cooling systems (including risers, stacks, ducts, S strips, fittings, dampers, casings, recess boxes, outlets, radiator enclosures, exhausts, ventilators, frames, grisses, louvers, registers, cabinets, fans, and motors);

10. The air washers, filters, air brushes, housings, air-conditioning chambers;

11. The setting and hanging of air-conditioning units, unit heaters or air-veyor systems, and air handling systems regardless of material used;

12. The assembling and setting up of all cast iron parts, warm air furnace, all stoker, gas, and oil burner equipment used in connection with warm air heating, all sheet metal hoods, casings, wall stacks, smoke pipes, truck lines, cold air intake, air chambers, vent pipes, frames, registers, dampers, and regulation devices;

13. The installing of equipment utilized in the operation of kitchens including ranges, canopies, steam tables, work tables, dishwashers, coffee urns, soda fountains, warming closets, sinks, drainboards, garbage chutes, incinerators, and refrigerators;

14. The installing of tubing, pipes, and fittings, used in connection with or incidental to coppersmithing work. The installation of fume hoods, metal toilet partitions, metal lockers, plain metal shelving; and

15. The handling, moving, hoisting, and storing of all sheet metal materials on the job site, where power equipment and rigging are required;

(S) Sprinkler Fitter—Applies to workers who perform the installation, adjustments, and corrections, repair, and dismantling of all fire protection and fire control systems and the installation of all fire piping for tubing, appurtenances, and equipment. The work falling within the occupational title includes: The handling and installation of all piping and appurtenances pertaining to sprinkler equipment, including both overhead and underground water mains, fire hydrants and hydrant mains, standpipes, and hose connections to the sprinkler systems, sprinkler tank heaters, air lines and thermal systems used in connection with sprinkler and alarm systems, tank and pump connections, and fire protection systems using mulsifyre, spray, water, fog, carbon dioxide (CO_2), gas and foam and dry chemical systems; and

(T) Truck Driver (which shall include truck control service driver, truck driver group I, truck driver group II, truck driver group III, and truck driver group IV)—The workers who perform work falling within the occupational title of work description for truck driver includes the operation, repair, and servicing of the following mechanical equipment. This occupational title encompasses several subclassifications, with the title and work description considered in light of whether the public works project pertains to building construction or heavy/highway construction.

1. Building construction. The subtitles falling within the occupational title of work description for truck driver, as applicable to building construction, are as follows:

A. Truck control service driver – Applies to workers who perform work including:

(I) The delivery, installation, and pickup of traffic control devices;

(II) The unloading and installation of barricades, plastic channelizer drums, safety cones, and temporary flashing lights not to exceed one hundred fifteen (115) volts;

(III) Regular periodic inspections to assure that traffic control devices are clean, clearly visible, and properly positioned. Inspection and maintenance includes replacing batteries and bulbs in lights, cleaning reflective material and lenses, and repairing or replacing damaged or missing devices when incidental to and part of a public works construction project; and

(IV) Removal of all traffic control devices by loading them on a truck and driving them to a storage yard where they are unloaded;

B. Group I—This subtitle applies to workers who operate, monitor, control, repair, modify, assemble, erect, oil, and service the following equipment: flat bed trucks single axle, station wagons, pick-up trucks, material trucks single axle, tank wagon single axle;

C. Group II—This subtitle applies to workers who operate, monitor, control, repair, modify, assemble, erect, oil, and service the following equipment: agitator and transit mix-trucks;

D. Group III—This subtitle applies to workers who operate, monitor, control, repair, modify, assemble, erect, oil, and service the following equipment: flat bed trucks tandem axle, articulated dump trucks, material trucks tandem axle, tank wagon tandem axle; and

E. Group IV—This subtitle applies to workers who operate, monitor, control, repair, modify, assemble, erect, oil, and service the

following equipment: semi and/or pole trailers, winch, fork and steel trucks, distributor drivers and operators, tank wagon semi-trailer, Insley wagons, dumpsters, halftracks, speedace, euclids, and other similar equipment, A-frame and Derrick trucks, float or low boy, and boom truck.

2. Heavy/highway construction. The subtitles falling within the occupational title work description for truck driver, as applicable to heavy/highway construction, are as follows:

A. Truck control service driver – Applies to workers who perform work including:

(I) The delivery, installation, and pickup of traffic control devices;

(II) The unloading and installation of barricades, plastic channelizer drums, safety cones, and temporary flashing lights not to exceed one hundred fifteen (115) volts;

(III) Regular periodic inspections to assure that traffic control devices are clean, clearly visible, and properly positioned. Inspection and maintenance includes replacing batteries and bulbs in lights, cleaning reflective material and lenses, and repairing or replacing damaged or missing devices when incidental to and part of a public works construction project; and

(IV) Removal of all traffic control devices by loading them on a truck and driving them to a storage yard where they are unloaded;

B. Group I—This subtitle applies to workers who operate, monitor, control, repair, modify, assemble, erect, oil, and service the following equipment: flat bed trucks single axle, station wagons, pick-up trucks, material trucks single axle, tank wagon single axle;

C. Group II—This subtitle applies to workers who operate, monitor, control, repair, modify, assemble, erect, oil, and service the following equipment: agitator and transit mix-trucks;

D. Group III—This subtitle applies to workers who operate, monitor, control, repair, modify, assemble, erect, oil, and service the following equipment: flat bed trucks tandem axle, articulated dump trucks, material trucks tandem axle, tank wagon tandem axle; and

E. Group IV—This subtitle applies to workers who operate, monitor, control, repair, modify, assemble, erect, oil, and service the following equipment: semi-and/or pole trailers, winch, fork and steel trucks, distributor drivers and operators, tank wagon semi-trailer, Insley wagons, dumpsters, halftracks, speedace, euclids, and other similar equipment, A-frame and Derrick trucks, float or low boy, and boom truck.

AUTHORITY: section 290.240.2., RSMo Supp. 2018. Original rule filed Sept. 15, 1992, effective May 6, 1993. Emergency amendment filed April 30, 1993, effective May 10, 1993, expired Aug. 28, 1993. Amended: Filed Aug. 13, 1996, effective Feb. 28, 1997. Amended: Filed Jan. 22, 1997, effective Sept. 30, 1997. Amended: Filed June 17, 2004, effective Dec. 30, 2004. Amended: Filed Aug. 19, 2010, effective Feb. 28, 2011. Amended: Filed Aug. 9, 2012, effective Feb. 28, 2013. Emergency amendment filed Nov. 7, 2014, effective Nov. 17, 2014, expired May 15, 2015. Amended: Filed Nov. 7, 2014, effective April 30, 2015. Emergency amendment filed Nov. 21, 2018, effective Dec. 1, 2018, expired May 29, 2019. Amended: Filed Nov. 21, 2018, effective July 30, 2019.*

**Original authority: 290.240, RSMo 1957, amended 1969, 2018.*

CITY OF FOUNTAINS
HEART OF THE NATION

KANSAS CITY
MISSOURI

ADDENDUM NUMBER ___

Project Number _____

Project Title _____
_____

[NOTE: Add Month/Date/Year for which this Addendum is officially posted by City. Be certain to remove this note before final document is printed.]

ISSUE DATE: _____

[NOTE: Addenda are used to clarify, revise, add to, or delete information in the original bidding documents or in previous addenda prior to opening of bids. Items should be organized in the same order as the original bidding documents Table of Contents. Cite the specific bidding document and the specific location within it where each change is to be made followed by the detailed change. If entire pages or documents are replaced or added as accompanying attachments, state the title of the document and the specific page number(s) removed and/or added. (e.g., Delete Section 01011 - Summary pages 1-6 and add the attached Section 01011 - Summary pages 1-10.). Be certain to remove this note before final document is printed.]

[NOTE: Add Month/Date/Year. Be certain to remove this note before final document is printed.]

Bidders are hereby notified that the Bidding and Contract Documents for the above project, for which Bids are to be received on _____, are amended as follows:

[NOTE: If the bid date is being changed add Month/Day/Year; if not, delete this sentence. Be certain to remove this note before final document is printed.]

The Bid date for this Project stated in Document 00130 - Invitation to Bid shall be changed to: 2:00 PM, on _____.

Information to Bidders The following is provided to Bidders for information only:

[NOTE: Include items under this heading such as Pre-bid meeting attendance list, soils report, etc.; items that should not be contractual, but are useful information to Bidders. Delete this heading and introduction if not applicable for this Addendum. Be certain to remove this note before final document is printed.]

1.

2.

[NOTE: Include Bidder/Proposer questions and answers to those questions. If questions are resolved by a contractual change, reference the contract section and make the appropriate change in one of the sections below. Delete this heading and table if not applicable for this Addendum. Be certain to remove this note before final document is printed.]

Q1.	
A1.	
Q2.	
A2.	
Q3.	

A3.	

[NOTE: Under the following sections, include changes to those documents under the heading with this same title found in Document 00010 - Table of Contents, (including changes to previous addenda). Format for revisions provided below. Delete sections if not applicable to this addendum. Be certain to remove this note before final document is printed.]

Bidding Requirements

1. Add the following section(s):
    a. Document, Sec. __, Subparagraph __, Page ___
    b. Document, Sec. __, Subparagraph __, Page ___

[OR]

2. Delete the following section(s):
    a. Document, Sec. __, Subparagraph __, Page ___
    b. Document, Sec. __, Subparagraph __, Page ___

[OR]

3. Delete and replace the following section(s):
    a. Delete Document, Sec. __, Subparagraph __, Page ___ and replace with the following Document, Sec. __, Subparagraph __, Page ___:
    b. Delete Document, Sec. __, Subparagraph __, Page ___ and replace with the following Document, Sec. __, Subparagraph __, Page ___:

Contracting Requirements

1.

2.

Specifications

1.

2.

Drawings:

1.

2.

NOTE: Bidders must acknowledge receipt of this Addendum by listing the number and date, where provided, on the Bid Form - Document 00410.

CITY OF FOUNTAINS
HEART OF THE NATION

KANSAS CITY
MISSOURI

REQUEST FOR INTERPRETATION

Project Number_____

Project Title_____

Contractor _____

RFI Number _____ Date _____

From: _____

To: _____

Re: _____

Spec. Sec. Ref: Paragraph: Drawing Ref: Detail:

Signed:

Response:

❑ Attachments

Response From: To: Date Transmitted:_____ Date Rec'd:_____

Signed:_____ Signed:_____
Design Professional Owner's Representative

Distribution:
- ❑ Owner
- ❑ Contractor
- ❑ Construction Manager
- ❑ Design Professional
- ❑ Consultant _____
- ❑ Other _____

CITY OF FOUNTAINS
HEART OF THE NATION

KANSAS CITY
MISSOURI

REQUEST FOR INTERPRETATION LOG

Project Number _____

Project Title _____

CONTRACTOR _____

OWNER _____

RFI No.	Issue Date	Brief Description of issue and response	Respond Date

CITY OF FOUNTAINS
HEART OF THE NATION

KANSAS CITY
MISSOURI

SUPPLEMENTAL DESIGN INSTRUCTION

Project/Contract Number:_____

Project Title:_____

To Contractor _____

From: _____ SDI No _____ Issue Date: _____

The Work shall be carried out in accordance with the following supplemental instructions issued in accordance with the Contract Documents without change in Contract Price or Contract Times. Proceeding with the Work in accordance with these instructions indicates your acknowledgement that there will be no change in the Contract Price or Contract Times.

Description:

❑ Attachments *(List)*

(Signature) Design Professional Date

Distribution:
- ❑ Owner
- ❑ Contractor
- ❑ Construction Manager
- ❑ Design Professional
- ❑ Consultant _____
- ❑ Other _____

CITY OF FOUNTAINS
HEART OF THE NATION

KANSAS CITY
MISSOURI

REQUEST FOR PROPOSAL

Project Number _____

Project Title _____

To Contractor _____

From: _____ RFP No _____ Issue Date: _____

Please submit an itemized proposal for changes in the Contract Price and Contract Times for proposed modifications to the Contract Documents described herein. Submit proposal within _____ days, or notify the Owner in writing of the date on which you anticipate submitting your proposal.

This is NOT a Change Order, a Work Change Directive or a direction to proceed with the work described in the proposed modifications.

Description:

❑ Attachments

Prepared by Design Professional

Prepared by Construction Manager

REQUESTED by OWNER'S Representative

Distribution:
- ❑ Owner
- ❑ Contractor
- ❑ Construction Manager
- ❑ Design Professional
- ❑ Consultant _____
- ❑ Other _____

CITY OF FOUNTAINS
HEART OF THE NATION
KANSAS CITY
MISSOURI

REQUEST FOR PROPOSAL LOG

Project/Contract Number: 81000691/1545

Project Title: I/I Reduction: Line Creek Rock Creek Areas 3 & 4

CONTRACTOR _____

OWNER _____

RFP No.	Issue Date	Brief Description of Request	Respond Date	Amount	CO No.

CITY OF FOUNTAINS
HEART OF THE NATION
KANSAS CITY
MISSOURI

CHANGE ORDER

Project Number/Contract Number _____

Project Title _____

Change Order No: _____ Date of Issuance: _____

Ordinance No: _____ Ordinance Effective Date: _____
Contract Notice To Proceed Date: _____

To CONTRACTOR: (Enter Contractors Company Name)

The Contract is changed as follows: _____

This Change Order constitutes compensation in full on behalf of the Contractor and its subcontractors and suppliers for all costs, including impact costs and extended general conditions, and markups directly and indirectly attributable to the Work changes ordered herein, for all delays related thereto and for performance of the changes within the time stated. Contractor hereby releases all claims for delay, interruption, extended general conditions, impact and cumulative impact claims for this Work.

[**Note**: Identify the specific attachments; example: "Attachment A, Additional Scope of Services."] **Delete all notes before printing final**

☐ See Attached Document(s) Flysheets needed before each attachment

A - Updated Certificate of Insurance

B-

C.D.E……

[**Note:** If the CO does not change the Contract Price, use "Director of Water Services" instead of "Director of Finance"]

Not valid until signed by the Director of Finance.

The original Contract Price was	$0.00
Net change by previously authorized Change Orders	$0.00
The Contract Price prior to this Change Order was	$0.00
The Contract Price will be (☐ increased by) (☐ decreased by) (☐ unchanged)	$0.00
The new Contract Price including this Change Order will be	$0.00

[Note: If revised, establish and enter new dates. If unchanged, enter current contract dates.
If you are only changing the Final Completion date, add the following reference:
"The Contract Time for Final Completion will be . . ."]

The Contract Time will be (☐ increased by) (☐ decreased by) (☐ unchanged)	( ) calendar days
The date of Achievement of Full Operation as of the date of this Change Order therefore is	Enter Date
The date of Final Completion as of the date of this Change Order therefore is	Enter Date

Project No. _____ Project Title_____
Change Order No.

I certify under penalty of law that the document and all attachments were prepared under my direction or supervision in accordance with a system designed to assure that qualified personnel properly gathered and evaluated the information submitted, and that the information submitted is, to the best of my knowledge and belief, true, accurate, and complete. I am aware that there are significant penalties for submitting false information, including the possibility of fine and imprisonment for knowing violations.

[**Note:** Include any required additional signatures.]

DESIGN PROFESSIONAL: **Name (Type Company Name)**	**By:** **Title:**	(type Name) (type Title)	**Date:**
CONTRACTOR: **Name (Type Company Name)**	**By:** **Title:**	(type Name) (type Title)	**Date:**
CITY: **KC Water**	**By** **Title:**	D. Matt Bond, P.E. Deputy Director	**Date:**

Approved as to form: _____
Assistant City Attorney

[**Note**: If this CO does not change the Contract Price, delete the cert. of funds by Finance Director but send signed copy to Finance.]

I certify there is a balance otherwise unencumbered to the credit of the appropriation to which the above amount is chargeable, and a cash balance otherwise unencumbered in the treasury to the credit of the fund from which payment is to be made, each sufficient to meet the above obligation.

By: _____
Director of Finance Date

Distribution:
- ❑ CITY
- ❑ CONTRACTOR
- ❑ DESIGN PROFESSIONAL

REMINDER: CONTRACTOR is responsible for considering the effect this Change Order may have on its ability to meet or exceed the D/M/WBE participation amounts in its Contractor Utilization Plan (CUP) as amended by any previously approved Request for Modification/Substitution. If CONTRACTOR will not be able to achieve the approved participation amounts in performing the work included within this Change Order, or if CONTRACTOR needs to retain the services of additional D/M/WBEs not previously listed in its CUP, CONTRACTOR is advised to submit a Request for Modification/Substitution.

CITY OF FOUNTAINS
HEART OF THE NATION
KANSAS CITY
MISSOURI

OCP CONSENT DECREE
WORK CHANGE DIRECTIVE

Project/Contract Number: 81000691/1545

Project Title: I/I Reduction: Line Creek Rock Creek Areas 3 & 4

No.: _____ Date of Issuance: __

TO: (CONTRACTOR)

You are directed to proceed promptly with the following work:

Description:

Purpose of Work Change Directive:

Attachments: *(List documents supporting change)*

If the above work results on a change in the Contract Price or Contract Times, any request for a Change Order based thereon will involve one or more of the following methods of determining the effect of the change(s).

Method of determining change in Contract Price:

- ❑ Unit Prices
- ❑ Lump Sum
- ❑ As Stipulated in General Conditions
- ❑ Other _____

Method of determining change in Contract Times:

- ❑ CONTRACTOR's Records
- ❑ DESIGN PROFESSIONAL's Records
- ❑ City's Records
- ❑ Other _____

Maximum Not to Exceed Amount (increase or decrease):

$ _____

If the change involves an increase, the estimated Amount is not to be exceeded without further authorization.

Not to Exceed Contract Times (increase or decrease):

Achievement of Full Operation: _____ days;

Final Completion: _____ days.

If the change involves an increase, the Not to Exceed Contract Times are not to be exceeded without further authorization.

I certify under penalty of law that the document and all attachments were prepared under my direction or supervision in accordance with a system designed to assure that qualified personnel properly gathered and evaluated the information submitted, and that the information submitted is, to the best of my knowledge and belief, true, accurate, and complete. I am aware that there are significant penalties for submitting false information, including the possibility of fine and imprisonment for knowing violations.

Recommended:	Recommended:	Recommended:
DESIGN PROFESSIONAL	CONTRACTOR	CITY
By (Authorized Signature)	By (Authorized Signature)	By (Authorized Signature)

_____ Project Manager Initials _____ Smart Sewer Program Construction Manager Initials

Distribution:

- ❑ City
- ❑ Contractor
- ❑ Construction Manager
- ❑ Design Professional
- ❑ Consultant
- ❑ Other

SECTION 01000 – GENERAL PROJECT REQUIREMENTS

PART 1 - GENERAL

1.01 SUMMARY

A. This section covers the general project requirements for all projects.

1.02 RELATED SECTIONS

A. Section 00700 – General Conditions.
B. Section 00800 – Supplementary Conditions.
C. Section 01015 – Specific Project Requirements.
D. Section 01020 – Record Documents.
E. Section 01300 – Submittals.
F. Section 01566 – Cleanup Operations.
G. Section 01570 – Temporary Erosion Control.
H. Section 01580 – Project Signs.
I. Section 01581 – Public Communications.
J. Section 02180 – Clearing and Grubbing.
K. Section 02190 – Demolition and Disposal of Debris.
L. Section 02200 – Earthwork.
M. Section 02949 – Tree Protection, Removal and Replacement.

1.03 CODES AND STANDARDS

A. By reference, as applicable for the Work being performed.

1.04 SUBMITTALS

A. Submit as specified in Section 01300 – Submittals.
B. Project Communications:
   1. Progress Meeting Minutes.
C. Other:
   1. Description and location of offsite storage arrangements.
   2. Construction Site Plan.
   3. Safety Representative.

1.05 QUALITY ASSURANCE

A. The Contractor is responsible for the quality assurance and quality control of the Work.

1.06 PRODUCT DELIVERY, STORAGE AND HANDLING

A. Storage of materials and equipment shall conform to manufacturer's recommendations.
B. Storage of equipment and material shall not interfere with public access and/or safety.
C. All material shall be protected from weather. Gaskets shall be protected from exposure to sunlight.
D. Offsite Storage:
   1. Offsite storage arrangements shall be approved by the City for all materials and equipment.

2. It is the Contractor's sole responsibility to provide adequate and satisfactory security and protection.
3. Offsite storage facilities shall be bonded and accessible to City.

E. Preparation for Shipment:
1. All materials and equipment incorporated into the project shall be suitably packaged to facilitate handling and protect against damage during transit and storage.
2. Painted surfaces shall be protected against impact, abrasion, discoloration, and other damage. All painted surfaces, which are damaged prior to acceptance of materials and equipment, shall be repainted to the satisfaction of the City.
3. Pipe and fitting linings shall be protected against damage.
4. Each item, package, bundle of material, or piece of equipment shall be tagged or marked as identified in the delivery schedule or on the Shop Drawings. Complete packing lists and bills of material shall be included with each shipment.

1.07 MATERIALS SELECTION AND ACQUISITION

A. The Contractor shall not use materials or equipment removed from existing premises, except as specifically permitted by the Contract Documents. All products shall be new, never used before, unless otherwise specified.

B. Provide interchangeable components of the same manufacturer, for similar removable components, such as: T-bolts, glands, gaskets, manhole rings and covers, etc.

1.08 CONSTRUCTION SITE PLAN

A. Unless otherwise specified in Section 01015 – Specific Project Requirements, prior to the start of work, the Contractor shall submit a site plan showing the locations and dimensions of temporary facilities which include, but are not limited to, the following layouts and details:
1. Equipment and material storage area (on-site and off-site).
2. Access and haul routes.
3. Avenues of ingress/egress in fenced areas.
4. Details of the fence installation.
5. Any areas which may have to be protected to prevent the tracking of mud.
6. Indicate if a supplemental or other staging area is being utilized.
7. Show locations of safety and construction fencing, job site trailer, construction entrances, trash dumpsters, temporary sanitary facilities and parking areas for project personnel.
8. Indicate locations of concrete washout facilities.

1.09 EASEMENTS AND RIGHTS-OF-WAY

A. The City will furnish the Site in accordance with Section 00700 - General Conditions. The Contractor shall confine construction operations to the immediate vicinity of the Site shown in the Contract Documents and shall use due care in placing construction tools, equipment, excavated materials, construction materials and supplies to cause the least possible damage to property and least possible interference with public traffic.

B. On Private Property:
   1. The permanent easements are as noted in the Contract Documents. No additional temporary construction easements have been obtained, unless otherwise indicated in the Contract Documents. The Contractor shall set stakes to mark the boundaries of construction easements across each private property. The stakes shall be protected and maintained until completion of the Work. After cleanup has been completed in accordance with Section 01566 – Cleanup Operations, the Contractor shall remove all construction stakes.
   2. The Contractor shall not enter any private property outside the designated construction easement boundaries without written permission from the owner of the property.
   3. Should it become necessary to use or occupy the land beyond the limits of the Site (as defined by Section 00700 – General Conditions), the Contractor shall obtain a written agreement with each affected property owner and tenant. Each agreement shall clearly outline the terms for which the Contractor may utilize the property and shall be fully executed by the Contractor, the property owner and the tenant (when applicable).
   4. Whenever the easement is occupied by crops which will be damaged by construction operations, the Contractor shall notify the property owner sufficiently in advance so that the crops may be removed before the Work is started. The Contractor is responsible for all damage to crops outside the easement and shall make satisfactory settlement for the damage directly with the property owner.
   5. Where the Work impacts fields that are leveled for irrigation or terraced, the Contractor shall relevel irrigated fields and replace all terraces to their original or better condition and to the satisfaction of the property owner.

C. Crossing State Highways:
   1. The City has obtained permission from the Missouri Department of Transportation (MoDOT) for the construction of the Work. The Contractor shall secure all necessary MoDOT permits and post bond as required for construction within the limits of the MoDOT right-of-way. All work within MoDOT right-of-way shall be in conformance with MoDOT regulations. The permit must be secured before any construction is started within MoDOT right-of-way.

1.10 MAIL BOXES

A. The U.S. Post Office Department's regulations prohibit the delivery of mail to addresses where there are no mailboxes or where the mailboxes are not readily accessible because of construction excavation.

B. The Contractor's execution of the Work shall not impede delivery of the mail. The Contractor shall ensure that all mail delivery to all mail boxes is uninterrupted. All excavated material, equipment, supplies shall be kept clear of mail boxes to allow normal access for mail delivery personnel and vehicles.

C. When removal of a mail box is necessary to facilitate the Work, it shall be removed, stored and re-set to its original position and elevation. From the time a mail box is removed, it shall be re-set and the surrounding area stabilized and restored within 24 hours.

1.11 LINES AND GRADES

A. All Work shall be done to the lines, grades and elevations indicated in the Contract Documents.

B. Basic horizontal and vertical control points are provided in the Contract Documents. All additional survey, layout and measurement work shall be performed by the Contractor as a part of the Work.

C. The Contractor shall provide an experienced instrument person, competent assistants and all instruments, tools, stakes and other materials required to complete the survey, layout and measurement work.

D. The Contractor shall provide qualified personnel, materials and equipment (tools, stakes and other materials) as may be required for the following tasks needed in the Work:

1. Establish or designate control points.
2. Establish construction easement boundaries.
3. Verify survey.
4. Verify layout shown on the Contract Documents.
5. Verify and document work performed by the Contractor.

These efforts shall be included in the Contractor's bid price and performed at no additional cost to the City.

E. The Contractor shall remove and reconstruct, at no additional cost to the City, any Work that was improperly installed or improperly located.

F. See Section 01020 – Record Documents, paragraph SURVEY REQUIREMENTS for additional requirements.

1.12 CONNECTIONS TO EXISTING FACILITIES

A. Unless otherwise specified or indicated, the Contractor shall make all necessary connections to existing facilities. This includes, but is not limited to, structures, drain lines, water utilities, sewer utilities, gas utilities, communications utilities and electric utilities. In each case, the Contractor shall receive permission from the City or the owning utility prior to undertaking a connection. The Contractor shall protect facilities against deleterious substances and damage.

B. Connections to existing facilities that are in service shall be thoroughly planned in advance. All required equipment, material and labor shall be on hand at the time of undertaking the connections. Work shall proceed continuously (around the clock) to complete connections in the minimum time possible. Operation of valves or other appurtenances on existing utilities, when required, shall be by or under the direct supervision of the owning utility.

1.13 UNFAVORABLE CONSTRUCTION CONDITIONS.

A. During unfavorable weather, wet ground, or other unsuitable construction conditions, the Contractor shall confine operations to Work that will not be adversely affected by such conditions.

B. No portion of the Work shall be constructed under conditions that would adversely affect the quality or efficiency thereof, unless special means or precautions are taken by the Contractor to perform the Work in a manner acceptable to the City.

1.14 UNDERGROUND FACILITIES AND ASSOCIATED RESTORATION

A. As provided in Section 00700, paragraph 4.04 of the General Conditions, the Contractor shall perform all cutting and patching required for the Work and as may be necessary in connection with locating all underground facilities, installation of Work, uncovering Work for inspection or for the correction of defective Work.

B. The Contractor shall perform all cutting and patching required for and in connection with the Work, including but not limited to the following:
   1. Removal of improperly timed Work.
   2. Removal of samples of installed materials for testing.
   3. Alteration of existing facilities.
   4. Installation of new Work.

C. The Contractor shall provide all shoring, bracing, supports and protective devices necessary to safeguard all Work and existing facilities during cutting and patching operations. The Contractor shall not undertake any cutting or demolition that may affect the structural stability of the Work or existing facilities without City's approval.

D. Materials shall be cut and removed as required to complete the Work. Materials shall be removed in a careful manner, with no damage to adjacent facilities or materials. The Contractor shall remove all excavated materials from the site that cannot be incorporated in the Work.

E. All Work and existing facilities affected by cutting operations shall be restored with new materials, or with salvaged materials acceptable to City, to obtain a finished installation with strength, appearance and functional capacity required to match the existing area. If necessary, entire surfaces shall be patched and refinished.

F. The Contractor, at no extra cost to the City, shall replace all surface features damaged, removed or so designated to be replaced.

1.15 ENVIRONMENTAL PROTECTION

A. Laws and Regulations:
   1. The Contractor shall conform to all laws and regulations as required by Section 00700 – General Conditions, Article 6 – Contractor's Responsibilities.

B. Storm Water Runoff:
   1. Storm Water Pollution Prevention Plan (SWPPP): As required by Section 00700 – General Conditions, Article 6 – Contractor's Responsibilities.
   2. Erosion Sediment Control: See Paragraph 1.25.
   3. The Contractor shall prevent the pollution of drains and watercourses by sanitary wastes, sediment, debris and other substances resulting from construction activities. See paragraph 1.38.
   4. Dewatering: As required by Section 02200 – Earthwork.
   5. Concrete Washout Facilities: As required by Section 01566 – Cleanup Operations.

C. Air Pollution:
   1. Burning: No open burning will be permitted.
   2. Dust Control: See paragraph 1.37.

D. Other Construction Activities:
   1. Disposal of Demolition Material: As required by Section 02190 – Demolition.
   2. Disposal of Debris: Section 02180 – Clearing and Grubbing and Section 02200 – Earthwork.

3. Protection of Wetlands: As shown on the Drawings or as specified in Section 01015 – Specific Project Requirements.
4. Floodplains: As shown on the Drawings or as specified in Section 01015 – Specific Project Requirements.
5. Cleanup and Site Maintenance: As required by Section 01566 – Cleanup and Site Maintenance.

1.16 LICENSES, PERMITS, AND CERTIFICATES

A. Requirements for licenses, permits and certificates are provided in Section 00700 – General Conditions, paragraph 6.09.
B. Permitting exceptions (if any) are noted in Section 00800 – Supplementary Conditions.

1.17 APPLICABLE CODES

A. Standard specifications of the Kansas City, Missouri Department of Public Works are, by reference, hereby made a part of this contract specifications. See Section 01015 – Specific Project Requirements for additional information.

1.18 REFERENCE STANDARDS

A. See Section 00700 – General Conditions, paragraph 3.02 for references to standards and specifications of technical societies.

1.19 PRECONSTRUCTION CONFERENCE

A. A Preconstruction Conference will be held in accordance with Article 2 of the General Conditions. The conference will be held at a mutually agreed time and location. The conference shall be attended by:
   1. Contractor and the project superintendent.
   2. Design Professional.
   3. Resident Project Representative.
   4. Representatives of City.
B. Other participants as requested by the Contractor, City, or Design Professional; such as the following:
   1. Principal Subcontractors.
   2. Representative of principal suppliers and manufacturers as appropriate.
   3. Utility Company representatives.
   4. Governmental representatives as appropriate.
   5. The Contractor shall bring to the conference the Preliminary Schedules described in Article 2 of the General Conditions (Preliminary Project Schedule, Preliminary Schedule of Values, Preliminary Schedule of Shop Drawings and Samples) and other pertinent information.
C. The purpose of the conference is to designate responsible personnel and to establish a working relationship. Matters requiring coordination will be discussed and procedures for handling such matters established. The agenda shall include, but not limited to, the following:
   1. Contractor's Preliminary Schedules.
   2. Document Management.
   3. Processing Applications for Payment.
   4. Maintaining record documents and electronic data requirements.
   5. Critical Work sequencing.
   6. Field decisions and Change Orders.

7. Use of premises, field office, material storage areas, security, housekeeping, and City's needs.
8. Major equipment deliveries and priorities.
9. Contractor's assignment for Safety Representative.
10. Expectations and the Contractor's plan for Environmental Protection.

D. City or Design Professional will preside at the conference, will arrange for keeping the minutes and will distribute the minutes to all persons in attendance.

1.20 PROGRESS MEETINGS

A. The Contractor shall schedule and hold progress meetings at least monthly, at other times as requested by the City or as needed by the progress of the Work. The Contractor, City, Design Professional, and all Subcontractors active on the Site shall be represented at each meeting. The Contractor may, at their discretion, request attendance of their suppliers, manufacturers or other utilities.

B. The Contractor shall preside at the meeting. Meeting minutes shall be prepared and distributed by the Contractor after review by the City or Design Professional. The purpose of the meetings will be to review the progress of the Work, maintain coordination of efforts, discuss changes in scheduling and resolve problems which may have developed on the project.

1.21 SAFETY REPRESENTIVE

A. In accordance with Section 00700 – General Conditions, Article 6 – Contractor's Responsibilities, the Contractor shall submit the name and complete contact information for the person designated as the Safety Representative for the Project.

B. In accordance with Section 01300 – Submittals, This information shall be submitted prior to the Preconstruction Conference.

C. If the Safety Representative changes during the Project, the Contractor shall designate a new person to fulfill the role and submit their name and complete contact information.

1.22 SITE ADMINISTRATION

A. The Contractor is responsible for all areas of the site used by their personnel and all Subcontractors in the performance of the Work. The Contractor will exert full control over the actions of all employees and other persons with respect to the use and preservation of property and existing facilities, except such controls as may be specifically reserved to Owner or others. The Contractor has the right to exclude from the site all persons who have no purpose related to the Work or its inspection and may require all persons on the site to observe the same regulations as their personnel.

1.23 CLEAN-UP

A. The Contractor shall conduct cleanup operations in accordance with Section 01566 – Project Cleanup.

1.24 FINAL ACCEPTANCE

A. Final Acceptance of the Work shall be in accordance with Section 00700 – General Conditions, Article 14.

1.25 EROSION AND SEDIMENT CONTROL

A. Work associated with erosion and sedimentation control shall be done in accordance with Section 01570 – Temporary Erosion and Sediment Control.

1.26 STREET LIGHTS

A. Relocation or restoration of streetlights due to construction interference shall be included in the Contractor's Bid Price. No separate measurement and payment will be made. The Contractor shall notify and coordinate street light relocations with the Public Works Department:

Street Lights Division
Phone: (816) 513-9500.

1.27 PROJECT SIGNS

A. Work associated with Project signs shall be done in accordance with Section 01580 – Project Signs.

1.28 RESTORATION

A. The Contractor shall replace all surface material and shall restore all paving, curbs, gutters, sidewalks, driveways, shrubbery, fences, sod and all other features disturbed to a condition of equal to or better than before the work began, furnishing all material, labor and equipment incidental thereto.

1.29 WATER

A. The City will furnish, without charge, all water necessary for the Work (i.e., filling, flushing, testing and disinfecting completed water lines). The Contractor shall make arrangements with the City for all water used.
B. Use of the City's water facilities shall be at the direction of the Water Services Department so that water is not wasted and service to customers is not impaired.
C. Any water furnished by the City must be obtained from an existing City main.
D. The Contractor shall use a Reduced Pressure Zone (R.P.Z.) Backflow Preventer and meter when connected to the City's water system. The Contractor shall contact the Kansas City Fire Department (KCFD) at (816) 513-4645 to purchase a hydrant meter permit. After securing a hydrant meter permit from KCFD, the Contractor shall present the permit to the Consumer Services desk located at Water Services Department headquarters, 4800 E. 63rd Street, KCMO. The Contractor shall apply for and pay Consumer Services the refundable security deposit. If approved, the Contractor shall contact the Water Services Backflow Department at (816) 513-4797 to schedule the installation of the R.P.Z./Meter (hydrant meter). The Contractor shall provide the location of the hydrant where the R.P.Z./Meter is to be installed. The Contractor shall contact the Backflow Department to have the R.P.Z./Meter moved or returned to Water Services. Jetting and Vacuum trucks with approved backflow prevention devices or air gap separation are not required to utilize a R.P.Z. backflow preventer; however, a meter to track water usage shall be used at all the times. The Jetter/Vac Contractor shall contact the Water Services Backflow Department for issuance of the meter and pay the associated refundable security deposit. In all cases, the Contractor is solely responsible for any and all damage to the equipment issued by the Water Services Backflow Department. The cost to repair the damage or the cost of complete replacement of the unit shall be deducted from the security deposit.

E. All costs for labor, material, equipment and services needed to obtain water for construction purposes shall be included in the Bid. No separate measurement or payment will be made to make connections.

1.30 OPERATION OF EXISTING VALVES

A. The Contractor shall not operate any valves on the City's system without direct supervision from a Water Services Department representative.
B. If the Contractor needs valves operated, the request shall be made at least forty-eight (48) hours in advance to Water Services for such operation, also giving notice to any affected customers/properties in accordance with the notification requirements outlined in Section 01581 – Public Communications.
C. The hydrant branch valves may be operated in the presence of a Water Services Department representative with no official advance notification.
D. All fire hydrants and water valves shall be kept free from obstruction and available for use at all times.

1.31 BARRICADES AND LIGHTS

A. All streets, roads, highways and other public thoroughfares which are closed to traffic shall be protected by effective barricades and acceptable warning signs. Barricades shall be located per the approved traffic control plan and associated permit.
B. All trenches and other excavations shall be covered and shall have suitable barricades, signs and lights to provide adequate protection to the public. Obstructions such as material piles and equipment shall be provided with similar warning signs and lights.
C. All barricades and obstructions shall be illuminated with warning lights from sunset to sunrise. Material storage and execution of the Work on or alongside public streets and highways shall cause the minimum obstruction and inconvenience to the traveling public.
D. All barricades, signs, lights and other protective devices shall be installed and maintained in conformity with applicable statutory requirements and as required by the authority having jurisdiction; such as, Work within railroad right-of-way, highway right-of-way, etc.

1.32 EXISTING FENCING

A. All existing fences affected by the Work shall be maintained by the Contractor until completion of the Work. Fences which interfere with construction operations shall not be relocated or dismantled until written permission is obtained from the owner of the fence and the period the fence may be left relocated or dismantled has been agreed upon.
B. Where fences must be maintained across the construction easement, adequate gates shall be installed. Gates shall be kept closed and locked at all times when not in use.
C. On completion of the Work across any tract of land, the Contractor shall restore all fences to their original location and to their original or better condition.

1.33 SAFETY FENCING

A. Provide fencing along the construction site at all open excavations and tunnels to control access by unauthorized people.

B. The safety fencing must be a high visibility orange colored, high density polyethylene grid or approved equal, a minimum of 48 inches high and maximum mesh size of 2 inches, supported and tightly secured to steel posts located on maximum 10-foot centers, constructed at the approved location.
C. Remove the fence from the work site upon completion of the Work.

1.34 PROTECTION OF PUBLIC AND PRIVATE PROPERTY

A. The Contractor shall protect, shore, brace, support, and maintain all underground pipes, conduits, drains and other underground construction uncovered or otherwise affected by the construction operations.
B. All pavement, surfacing, driveways, curbs, gutters, sidewalks, buildings, utility poles, guy wires, fences, and all other features and structures affected by construction operations, together with all sod and shrubs in yards, parkways, medians and green spaces, shall be restored to their original condition, whether within or outside the right-of-way or easement. All replacements shall be made with new materials.
C. Work associated with tree protection, removal and replacement shall be done in accordance with Section 02949 – Tree Protection, Removal and Replacement.

1.35 DAMAGE TO EXISTING PROPERTY

A. The Contractor is solely responsible for any damage to existing features, structures, Work, materials, or equipment because of their operations and shall repair or replace any damaged features, structures, Work, materials, or equipment to the satisfaction of the City and at no additional cost to the City.
B. The Contractor shall protect all existing structures and property from damage and shall provide bracing, shoring, or other work necessary for such protection.
C. The Contractor is responsible for all damage to streets, roads, curbs, sidewalks, highways, shoulders, ditches, embankments, culverts, bridges, or other public or private property, which may be caused by transporting equipment, materials, or personnel to or from the Work. The Contractor shall make satisfactory and acceptable arrangements with the agency having jurisdiction over the damaged property concerning its repair or replacement.

1.36 NOISE CONTROL

A. The Contractor shall conduct construction operations as described herein and in compliance with the City of Kansas City, Missouri Code of Ordinances, Chapter 46 – NOISE CONTROL.
B. The Contractor shall take all reasonable measures to avoid unnecessary noise. Such measures shall be appropriate for the normal ambient sound levels in the area during working hours. All construction machinery and vehicles shall be equipped with practical sound-muffling devices and operated in a manner to cause the least noise, consistent with the efficient performance of the Work.
C. During construction activities on or adjacent to occupied buildings and when appropriate, the Contractor shall erect screens or barriers effective in reducing noise in the building and shall conduct their operations to avoid unnecessary noise which might interfere with the activities of the building occupants.

D. All work including, but not limited to, excavation, demolition, alteration, or repair being performed in or adjacent to a residential area other than between the hours of 7:00 a.m. and 6:00 p.m. on weekdays, except in the case of urgent necessity in the interest of public safety, shall require a letter of permission from the Water Services Department of the City of Kansas City, Missouri.

1.37 DUST CONTROL

A. The Contractor shall control dust in accordance with Section 01566 – Cleanup Operations, paragraph DUST CONTROL. The Contractor shall take all reasonable measures to prevent unnecessary dust. Earth surfaces subject to dusting shall be kept moist with water or by the approved application of an approved chemical suppressant. When practicable, dusty materials in piles or in transit shall be covered to prevent blowing.

B. Buildings or operating facilities which may be affected adversely by dust shall be adequately protected from dust. Existing or new machinery, motors, instrument panels, or similar equipment shall be protected by suitable dust screens. Proper ventilation shall be included with dust screens.

1.38 POLLUTION CONTROL

A. The Contractor shall prevent the pollution of drains and watercourses by sanitary wastes, sediment, debris or other substances resulting from the construction activities. No sanitary wastes will be permitted to enter any drain or watercourse other than sanitary sewers. No sediment, debris, or other substance will be permitted to enter sanitary sewers and all reasonable measures will be taken to prevent such materials from entering any drain or watercourse.

1.39 SECURITY

A. The Contractor is solely responsible for security and protection of the site. This includes protecting all Work, materials, equipment, existing facilities and all temporary facilities against theft, vandals and access by unauthorized persons.

B. No claim shall be made against the City by reason of an act of an employee or trespasser. The Contractor shall make good on all damage and theft of property resulting from the Contractor's failure to provide adequate security measures.

1.40 PARKING

A. The Contractor shall provide and maintain suitable parking areas for the use of all City personnel, construction workers and others performing work or furnishing services in connection with the Project. Suitable parking is required to avoid the need for parking personal vehicles where they may interfere with traffic, City's operations, or construction activities.

1.41 PIPELINE MARKERS

A. Pipeline markers as shown in Construction Detail Drawing No. 01000-1 shall be installed at the locations shown on the Drawings.

B. Contractor shall field verify Stations and Locations for pipeline markers to comply with actual construction. The Contractor shall coordinate labeling with the City/Design Professional prior to fabricating the marker plates. The Contractor shall submit as required in Section 01300 – Submittals.

PART 2 - PRODUCTS

Not used.

PART 3 - EXECUTION

Not used.

Drawing No. 01000-1 on the following page.

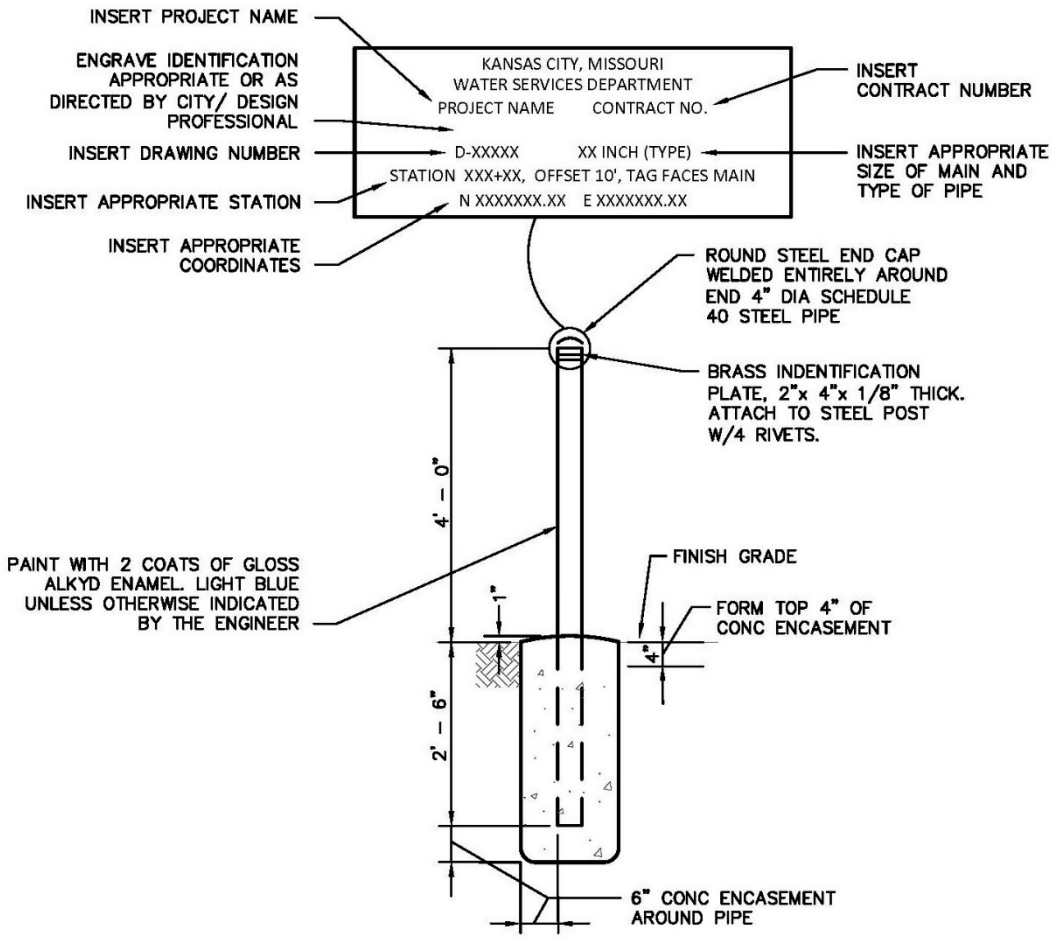

NOTES:

1. PIPELINE MARKERS AS SHOWN IN THIS DETAIL SHALL BE INSTALLED AT THE LOCATIONS SHOWN ON THE DRAWINGS.
2. CONTRACTOR SHALL VERIFY STATIONS AND LOCATIONS FOR PIPELINE MARKERS TO COMPLY WITH ACTUAL CONSTRUCTION, AND SHALL COORDINATE LABELING WITH CITY/ DESIGN PROFESSIONAL PRIOR TO FABRICATING AND INSTALLING PIPELINE MARKERS. SUBMIT AS REQUIRED IN SECTION 01300–SUBMITTALS.

PIPELINE MARKER

WATER SERVICES
CITY OF KANSAS CITY, MISSOURI
DRAWING NO. 01000-1

DEVELOPED BY: TECHNICAL ADVISORY COMMITTEE
APPROVED BY:
DATE: 9/02/2021

1 OF 1

END OF SECTION

SECTION 01015 - SPECIFIC PROJECT REQUIREMENTS

IN THE EVENT THIS SPECIFICATION 01015 – SPECIFIC PROJECT REQUIREMENTS CONFLICTS WITH OTHER PROJECT SPECIFICATIONS DIVISIONS 01 THROUGH 06; THIS SPECIFICATION 01015 – SPECIFIC PROJECT REQUIREMENTS SHALL GOVERN.

1. GENERAL DESCRIPTION OF WORK

   The work to be performed under these Contract Documents shall be consistent with the General Conditions in the construction, installation, and completion of all work required in connection with the I/I Reduction: Line Creek Rock Creek Areas 3 & 4 in Kansas City, Platte and Clay Counties, Missouri. The work to be performed under these Construction Contract Documents is generally described as follows:

   The project consists of the construction which includes rehabilitation/replacement of main sewers, manholes, and service lateral connections in the Line Creek Rock Creek basin. The basin is located in the northern region of Kansas City, Missouri. The project area is generally bound on the north by MO Highway 152, on the south by NE 42nd Street, on the east by N Troost Avenue, and on the west by N Greenhills Road.

   The Work includes preconstruction and post-construction CCTV inspection of mainline sewers and service laterals, rehabilitation of approximately 11,000 linear feet of sewer mains by installation of Cured-In-Place-Pipe (CIPP) ranging in diameter from 8-inch to 24-inch, approximately 1,600 feet of toal replacement of sewers ranging in diameter from 8-inch to 16-inch, approximately 43 open cut main line point repairs, approximately 134 CIPP service connection and lateral lining repairs, approximately 38 open cut service connnection repairs, and restoration in accordance with Construction Contract Documents. The Work also includes rehabilitation of manholes by various methods including approximately 1,365 vertical feet of cementitious liner, five full manhole replacements, five manhole cone replacement, approximately 650 frame and cover replacements, and restoration in accordance with Construction Contract Documents.

2. CONTRACT DRAWINGS

   The Contract Drawings or "Plans" on which the Form 00412 Adjustment Unit Prices and Contract are to be based are Smart Sewer drawings entitled I/I Reduction: Line Creek Rock Creek Areas 3 & 4**.** The Contract Drawings are to be supplemented by additional shop and dimension drawings of materials and equipment and other drawings where specified.

Line Creek/Rock Creek Area 3 & 4	
Sheet Number	**Title**
1	Cover sheet
Line Creek/Rock Creek Area 3	
Sheet Number	**Title**
1	Cover Sheet
2	General Notes
3-4	General Layout
5-26	Plan Sheet and Rehabilitation Schedule
Line Creek/Rock Creek Area 4	
Sheet Number	**Title**
1	Cover Sheet
2	General Notes & Overall Layout
3-49	Plan Sheet and Rehabilitation Schedule

3. MATERIALS FURNISHED BY THE OWNER
   The Owner will not furnish any materials to the Contractor for this project. All materials required to complete the work in accordance with the Contract Documents shall be furnished, installed, and paid for by the Contractor.

4. SEQUENCE OF WORK.
   Contractor shall proceed with the work in the following general sequence for each repair:
   A. Where excavation is required, call 1-800-DIGRITE or 811 to confirm location of underground utilities in accordance with Missouri One Call System requirements.
   B. Take pre-construction photographs per SECTION 01322 – PHOTOGRAPHIC DOCUMENTATION. Pre-construction photographs must be submitted and approved by Owner prior to construction activities in any area.
   C. For Critical Facilities including, but not limited to, hospitals, grocery stores, schools, daycares, retirement centers, and government buildings, the Contractor shall notify the owner or tenants at least three weeks in advance of any work. Contractor shall coordinate project schedule with the owner or tenants and accommodate reasonable requests from critical facilities regarding scheduling of the work.
   D. Contractor shall contact all other property owners or tenants to notify them of impending work 48 hours in advance of work starting via door knock and door hanger.
   E. For commercial and shopping districts, the contractor will be required to provide a schedule updated weekly outlining work with the potential to affect access to the businesses. This weekly schedule will be provided to the Engineer for posting online to notify businesses and the public.
   F. Contractor shall perform the necessary cleaning, tap trimming, and pre-construction CCTV of main sewers and all associated laterals listed in the main line rehabilitation schedule to verify the rehabilitation methods, as well as the location and extent of recommended rehabilitation. If required, CCTV shall be performed from both the upstream and downstream manholes to assess both sides of an obstruction. Cleaning shall include light cleaning, as well as all heavy cleaning and tap trimming necessary

to investigate and perform rehabilitation.

G. Contractor is responsible to field verify by lateral launching CCTV or other approved methods, connectivity of all service connections on main sewers scheduled for rehabilitation and verify the ability to CIPP line the lateral connection. Only active service connections shall be reinstated or rehabilitated. Contractor shall submit findings to the Owner/Engineer for approval prior to performing rehabilitation.

   Contractor shall evaluate all laterals and submit an active/dead and unable to CIPP list for all laterals on every sewer segment being rehabilitated. The submittal shall include the method for determining active/dead and unable to CIPP laterals. Video documentation shall be provided for laterals deemed unable to perform lateral CIPP. Design Professional reserves the right to request lateral launch CCTV if pan and tilt mainline CCTV does not provide proper evidence that the lateral cannot be lined.

H. For sewer segments scheduled for mainline rehabilitation, the following sequence shall be followed by the Contractor:

   1. Contractor shall conduct their own CCTV inspection of mainlines to verify the rehabilitation method specified for each mainline sewer and service lateral.
   2. If CCTV cannot be completed due to debris or protruding taps, Contractor shall perform heavy cleaning, root cutting, and/or trim protruding taps at no additional cost to the Owner to complete the full segment CCTV.
   3. If CCTV cannot be completed due to pipe collapse or other structural damage that requires a point repair, Contractor shall inform Engineer that a point repair is required to complete CCTV. Contractor shall attempt to complete CCTV from other end of the line prior to performing a point repair.
   4. If the CCTV inspection cannot be completed due to additional line obstructions, Contractor shall contact Engineer for further direction.
   5. Following completion of preconstruction CCTV, Contractor shall submit to the Owner/Engineer for review a list of laterals or mainline sewers where the specified rehabilitation method cannot be performed, CCTV inspection data, and Contractor's proposed method for rehabilitation. The Owner/Engineer must provide approval prior to work starting.

I. Following completion of CCTV and the Engineer's approval of any revised rehabilitation recommendations, the Contractor shall:
   1. Perform all required open cut point repairs on main sewers prior to CIPP lining of the sewer segment.
   2. Open cut service lateral connection repairs located within a point repair shall be performed at the same time as part of the open cut point repair.
   3. CIPP lining of the main sewer segment shall be performed prior to repair or rehabilitation of service laterals connected to the main sewer segment.
   4. All open cut service lateral connection repairs and CIPP service lateral connection repairs shall be performed after CIPP lining of the sewer segment.
   5. For all open cut service laterals, Contractor shall not backfill the service laterals until inspector verifies service lateral installation and documents the necessary information. Contractor shall make up to 4 calls for Water Services Line Maintenance Division inspector. The remaining laterals shall be

inspected by Resident Project Representative who shall record the information in the Survey 123 application in lieu of the Water Services Line Maintenance Division inspector.

6. Sewer rehabilitation (CIPP lining) and total segment replacement (open cut or pipe burst) shall be performed prior to cementitious lining of adjacent manholes.
7. To minimize disruption to area residents, new manholes scheduled on total line replacement segments shall be installed at the same time as the total line replacement work.

J. After point repairs have been completed on mainline sewers not receiving CIPP, post-construction CCTV shall be submitted to Owner/Engineer for review.
K. Where active service laterals fall within a CIPP Sectional Point Repair, the lateral shall be reinstated prior to post-rehabilitation CCTV. Post-rehabilitation CCTV shall be submitted to Owner/Engineer and reviewed prior to payment.
L. Contractor shall perform the necessary cleaning of manholes scheduled for rehabilitation work in the Manhole Rehabilitation Schedule. Locate and report findings to Engineer for "Non-Inspected manholes" as noted on the plan sheets with a symbol ( ) or a Hexagon Note #2 (2).
M. Manhole frame and cover replacement and mainline CIPP shall be performed prior to cementitious lining of manholes.
N. Engineer will select cementitious lined manhole for vacuum testing inspection at random after completion of the Work and in accordance with Section 02702.
O. Pipe End Seal Liners shall not be installed until approved by Engineer.
P. Contractor to perform and submit required post-construction CCTV and/or acceptance testing prior to monthly billing to allow for review prior to payment.
Q. Prior to Final Payment, Contractor shall resubmit all post-construction CCTV of each main sewer segment CIPP and associated rehabilitated laterals in one organized package in accordance with Section 02686.
R. Contractor shall perform site restoration at each site as work progresses. Contractor shall not be paid for an item until restoration is complete.
S. Contractor shall sequence work to meet City standards for site restoration at each site as work progresses within two weeks for pavement, curb and gutters, and sidewalks. Interim restoration shall be completed within three weeks for other work.

5. <u>SECTION 01020 – RECORD DOCUMENTS</u>

Add the following to Paragraph 3.01,D.c:

i. All measurements on the Record Documents must be updated to indicate the true location of the work as it was constructed in the field. The Record Documents for sewer point repairs must include references for all beginning and ending points expressed in feet from the upstream manhole. Service lateral open cut repairs shall include reference to the actual location expressed in feet and decimals of a foot from the upstream manhole.
ii. Manhole and sewer sizes and connections shall be updated to reflect what was determined in the field. Final manhole elevations shall be shown for all raised manholes. Sewer services that are determined to be abandoned shall be marked as abandoned on the Record Documents.

iii. Contractor shall provide Owner and Engineer the horizontal/vertical control coordinates, top elevations, and all invert elevations for all newly installed manholes, raised manholes, and manholes that are found that could not be located previously.

DELETE Paragraph 3.03 through 3.07 and replace with the following:

A. The Contractor shall not be responsible for developing As-Built Drawings or Conforming to Construction Drawings.

6. SECTION 01300 – SUBMITTALS

A. The Contractor shall not prepare or submit shop drawings for new manholes until design elevations and pipe sizes have been confirmed by the Contractor in the field. Determination of design elevations and pipe sizes by the Contractor may require potholing, survey of horizontal locations and elevations, confirmation of depth/location of existing/new pipe connections to manhole, and determination of sizes and material types of existing utilities adjacent to structures and of existing utilities crossing proposed pipes.

7. SECTION 01320 – CONSTRUCTION PROGRESS DOCUMENTATION

A. In accordance with Section 01320, paragraph 1.06, Contractor shall provide a Schedule that meets the requirements of a Level 4 – Detail Schedule by Work Package Level.

B. In accordance with Section 01320, paragraph 1.11, a Cost Correlation is **not** a requirement of the Project.

C. Contractor shall coordinate with Resident Project Representative (RPR) weekly to verify quantities.

D. To expedite the monthly invoice review time, the Contractor shall submit an electronic monthly schedule to Owner, Engineer, and RPR for review prior to submitting the monthly invoice. The signed invoice, with approved schedule, shall be given to the RPR for approval prior to Owner and Engineer approval.

E. Contractor shall provide a detailed payment application forecast of planned payment application amounts for each month and for all work through the end of the contract period. The payment application forecast shall include a breakdown of monthly Contractor, MBE, and WBE payment application amounts. With each payment application, the Contractor shall provide a table of actual versus forecasted monthly amounts to track progress of work monthly through project completion. The payment application shall include a simple tracking graph of the forecast and results to date of payment application period that clearly shows each of the monthly amounts and progress to date versus forecast.

8. SECTION 01322 – PHOTOGRAPHIC DOCUMENTATION

A. Scope

1. Pre-Construction Video **will not** be required as part of this project.
2. Haul Route Video **will not** be required as part of this project.
3. Pre-Construction Photographs **will be** required as part of this project.
4. Construction Progress Photographs **will not** be required as part of this project.
5. Construction Activity Photographs **will not** be required as part of this project.
6. Post Construction Photographs **will be** required as part of this project.

B. Deliverables
   1. All photographs provided by the CONTRACTOR will be submitted using the Document Control System in accordance with Section 01335.
   2. All photographs provided by the CONTRACTOR will be submitted on USB Flash Drive.

9. SECTION 01500 – TEMPORARY FACILITIES
   A. Section 3.01, Office: In accordance with paragraph OFFICE, the Contractor **will not** be allowed to use an assigned vehicle in lieu of a stationary office. The Stationary Office must be located within the Area of Work, as shown on the Contract Drawings. Request for Stationary Office outside of the Area of Work must be approved by Owner and Engineer.
   B. Section 3.02, Field Office for Resident Project Representative: In accordance with paragraph FIELD OFFICE FOR RESIDENT PROJECT REPRESENTATIVE, the Contractor **shall be** required to provide a field office for the Resident Project Representative on the Site with the following minimum requirements:
      1. 150-square-foot minimum, with minimum dimension of 8 feet.
      2. Secure entrance doors - one set of keys.
      3. Windows with operable sash and insect screens.
      4. Lockable storage closet.
      5. Resilient floor covering.
      6. Furnishings:
         (a) One standard size desk with three drawers, swivel desk chair with arms.
         (b) One conference table with chairs to accommodate ten persons.
         (c) One throw table of sufficient size for full size Drawings and Submittals.
         (d) One plan rack to hold a minimum of six (6) racks of Drawings.
         (e) One standard four-drawer legal-size metal filing cabinet with lock and key.
         (f) Six linear feet of bookshelves,10-inch minimum depth.
         (g) Two straight chairs.
         (h) One waste basket per desk and table.
         (i) One tack board, 36" x 30"
      7. Services:
         (a) Lighting: 50 foot-candles (538 lux) at desktop height. Exterior lighting at entrance door.
         (b) Heating and air conditioning.
         (c) Electrical Service: Minimum of two circuits, 110V, 60 hertz. Minimum of four 110V duplex convenience outlets.
         (d) Toilet facilities.
         (e) Separate line telephone.
         (f) Electric water cooler.
         (g) Internet service
   C. Delete and replace paragraph 3.03.D.2 with the following:
      1. Sanitary facilities shall be of reasonable capacity, properly maintained throughout the construction period, and obscured from public view or mounted on portable trailer that is hauled to laydown area each night.

10. SECTION 01580 – PROJECT SIGNS
   A. Project signs will not be required.

11. SECTION 01700 – TRAFFIC CONTROL
    A. Contractor shall keep residents, businesses, schools, hospitals, and other public and private entities informed of the project's work schedule that may interfere with regular access to their facilities. Notifications and coordination shall be performed in conjunction with Section 4 – Sequence of Work.
    B. Contractor shall coordinate as necessary travel routes for KCATA buses during lane closures.
    C. Contractor shall comply with City of Kansas City Ordinance 211030 dated 12/9/2021. A copy of this ordinance is attached at the end of this section.

12. SECTION 02575 – SURFACE RESTORATION
    A. Notify Engineer and submit an RFI if a disturbed driveway is located on an unimproved roadway (no curb) and no roadway channel or driveway culvert exists. Contractor shall not proceed until Engineer provides final direction for reconstruction of the driveway.
    B. Any driveway, sidewalk, road, or parking lot damaged by construction activities shall be replaced at no additional cost to Owner. For sidewalks, curbs, and driveways, any section that is cut shall be removed to the nearest joint. If a manhole cover lies in the driveway apron, the Contractor shall replace the entire apron section to the nearest joint.

13. SECTION 06010 – CURED IN PLACE PIPE (CIPP)
    A. For each service connection encountered, the Contractor shall investigate and determine the status (active or inactive) as specified in Section 06010 – Cured-In-Place-Pipe (CIPP), Service Lateral Reinstatement.
    B. Contractor shall CCTV with a lateral launch camera or use other means to determine active service connections on all main sewers scheduled for rehabilitation.
    C. Contractor shall provide a list of active and inactive services and verification method prior to performing Work.
    D. Contractor shall coordinate with Owner/Engineer to confirm that boarded up structures are not scheduled for demolition prior to reinstating service.
    E. Outside drops on sewer segments receiving CIPP lining shall be reinstated and cleaned regardless of whether the manhole is being rehabilitated.

14. OPERATION OF EXISTING SEWER.
    A. The capacity of the existing sewers must be maintained. Contractor shall provide temporary bypass facilities to maintain the capacity of the sewers. No separate payment shall be made for bypass pumping or hauling. No separate payment shall be made for bypass pumping of combined sewers during wet weather. The contractor shall note when construction is occurring downstream of a sewer inlet and shall plan accordingly. When pumping and bypassing is required, the Contractor shall supply all equipment necessary to divert the flow of wastewater around the main sewer section being televised, cleaned, rehabilitated, or replaced. Contractor shall monitor bypass at all times. No sewage shall be discharged into surrounding waterways or to the surface. In case of discharge, Contractor shall contact Owner's project manager immediately. The Contractor will be held responsible for any wastewater backups caused by his operations and any damage to public or private property as a result of

wastewater backups. Service laterals remaining off line for more than 12 hours shall be bypass pumped until such time as they can be reconnected.

15. LATERAL CONNECTION FULL WRAP CIPP SERVICE LATERAL
    A. All active **residential** service laterals on mainline sewer segments scheduled to be rehabilitated located in the easement/backyards are to receive a lateral connection full wrap CIPP **long** liner (5') to rehabilitate the service lateral to the easement boundary or the apparent easement boundary. The approximate distance to the easement boundary or right-of-way line is listed in the Mainline Rehabilitation Schedule. Active **commercial** laterals are to receive a lateral connection full wrap CIPP **short** liner.
    B. All active **residential** and **commercial** service laterals on mainline sewer segments scheduled to be rehabilitated located in the right-of-way/front yards are to receive a lateral connection full wrap CIPP **short** liner (18") to rehabilitate the service lateral.

16. OPEN CUT REPLACEMENT OF SERVICE LATERAL CONNECTION
    A. All service laterals approved for open cut replacement located within the right-of-way or front yards shall be replaced a minimum of five (5) horizontal feet or to sound pipe as agreed upon by Contractor and RPR on site.
    B. All residential service laterals selected for open cut replacement located within the backyard easements shall be replaced to the permanent easement boundary.
    C. All commercial service laterals selected for open cut replacement located within the backyard easements shall be replaced a minimum of five (5) horizontal feet or to sound pipe but no further than the permanent easement boundary.
    D. If over five (5) horizontal feet of service lateral is required to connect to sound pipe, as agreed upon by Contractor and RPR on site, the additional length shall be measured horizontally and paid per foot per Section 01270.
    E. If multiple service laterals exposed during open cut completion of Work are at the same, or near the same location along the sewer pipe, and the Contractor is not able to install the wye connections, the Contractor is responsible for relocating one or more service laterals to allow installation of the wye connections.
    F. For all open cut service laterals, Contractor shall not backfill the service laterals until inspector verifies service lateral installation and documents the necessary information. Contractor shall make up to 4 calls for Water Services Line Maintenance Division inspector. The remaining laterals shall be inspected by Resident Project Representative who shall record the information in the Survey 123 application in lieu of the Water Services Line Maintenance Division inspector.

17. SEWER AND MANHOLE DEPTHS
    A. The depths listed for manholes in the Manhole Rehabilitation Schedule and in the Mainline Rehabilitation Schedule in Section 01015 are approximate only. Manholes with unknown depths, identified by "UNK" in the Manhole Rehabilitation Schedule, were either unlocated or uninspected manholes.
    B. Manholes that are shown on the plan sheets with a symbol ( ) or a Hexagon Note #2 (2) could not be inspected during the initial field investigations.
    C. For manholes labeled with the symbol ( ) or a Hexagon Note #2 (2) as "Non-Inspected Manholes" that are on mainline sewers scheduled for rehabilitation, the

Contractor shall determine the depth, location, and condition of the manhole and sewer scheduled for Work.

1. After locating the manhole, Contractor shall request visual inspection by RPR or Engineer prior to scheduled rehabilitation on the sewer connected to the non-inspected or cannot perform manhole.
2. If the manhole cover is below grade, at direction of Engineer, Contractor shall raise to grade per these specifications. If the Engineer recommends rehabilitation or replacement, the work will be paid at the appropriate Adjustment Unit Price as defined in 01270 and added to the project through an RFI.

D. It shall be the responsibility of the Contractor to determine the actual depths required for new manholes, CIPP installation, or other rehabilitation work for all manholes and sewers.

E. Contractor shall be responsible to field inspect and confirm depth, presence of drop pipes, and number and size of pipes entering/exiting the manhole, prior to submittals and installation of manhole replacement.

F. Where manholes are being added to eliminate fittings or lampholes within the collection system or a new manhole is being installed, it will be necessary to excavate and expose the existing fittings and sewer pipes to determine the depth and orientation and elevation of pipes entering and exiting the new manhole.

G. Outside drops on sewer segments scheduled for total line replacement or an open cut point repair adjacent to the manhole, shall have the outside drop rebuilt as part of the work.

18. <u>MANHOLE FRAME AND COVER</u>

A. All manhole castings that are to be replaced are indicated on the Manhole Schedule under “Replace Frame and Cover – Paved (Adjustable Casting)”, “Replace Frame and Cover – Paved (Standard Casting)”, or “Replace Frame and Cover – Unpaved (Standard Casting)”.

B. All manhole castings shall be raised to the existing surrounding grade unless otherwise stated.

C. Manhole frame and cover replacement located in “non-thru traffic” areas including unpaved areas, driveways, and sidewalks are to receive standard hinged castings.

D. Manhole frame and cover replacements in streets, alleys, or other thru-traffic areas shall receive adjustable type castings.

E. Contractor shall furnish and install new manhole frame and covers per Section 05010 – Construction Castings. If Contractor determines in the field that over 12-inches of adjustment is required, Contractor shall contact Owner/Engineer and submit an RFI.

F. Manhole covers removed by the Contractor shall be delivered to Kansas City Water Services, 18th Street Storeroom. Contractor shall not retain any manhole covers.

G. In paved areas, the top of the casting shall conform to the slope of the pavement and be 1/8-inch below the finished pavement elevation. After setting the casting to 1/8-inch below the finished pavement elevation, a Portland cement concrete cap (MCIB Mix WA738-3/4-4) shall be poured flush with the surrounding pavement securing the adjustable casting. The concrete cap surrounding the casting shall be no smaller than 4-feet by 4-feet, but no larger than 6-feet by 6-feet.

19. REBUILD BENCH AND TROUGH
    A. At locations indicated on the Manhole Rehabilitation Schedule, the manhole shall have the existing bench and trough rebuilt as specified herein. Rebuilding of the bench and trough shall consist of removal of all unsound concrete, debris, grease, roots, or any other material that will hinder the bonding of the cementitious patch material; pressure washing of the manhole bench and invert surface; plugging and patching of bench and invert defects using the cementitious patch/plug material as required; and reforming and refinishing the bench and invert using cementitious patch material.
    B. Prior to reforming and refinishing, loose bricks and mortar, unsound concrete, grease, roots, mud and debris shall be completely removed to a depth necessary to expose a sound substrate to allow for proper forming, shaping and finishing of the bench and invert. Removed bricks shall be replaced, actively leaking areas plugged, voids and cracks patched, and flow through the manhole blocked and bypassed.
    C. The bench and invert shall be formed, shaped and finished using quick-curing cementitious patch material to construct a manhole floor and flow channels. Benches and inverts shall be shaped and finished smooth and free of ridges so that the manholes will be self-cleaning and free of areas where solids may be deposited as sewage flows through the manhole from all in-flowing pipes to the out-flowing pipes.
    D. All cementitious material shall be installed in accordance with SECTION 03362 – MANHOLE REHABILITATION. The cementitious patching material shall be troweled uniformly onto the damaged bench and invert at a minimum thickness of ½ inch. The cementitious patch material shall not be allowed to enter any pipes. The flow through the manhole may be re-established 30 minutes after the patch material sets, or as recommended by the cementitious material manufacturer, whichever is longer.

20. MANHOLE REHABILITATION (INTERNAL MANHOLE CHIMNEY SEALS)
    A. All manholes scheduled for cementitious lining without frame and cover replacement shall have an internal manhole chimney seal installed. All manholes with frame and cover replacement shall receive an external seal. The internal manhole seal shall be Flex-Seal Sealant by Sealing Systems, Inc or City approved equal.

21. CONSTRUCTION OBSTACLES AND UTILITIES
    A. Unless noted otherwise, the plans are based on City GIS data and do not include existing utilities other than Kansas City Water sanitary sewers.
    B. Engineer has made limited site visits. Unless noted otherwise, Engineer has not surveyed the area of Work and has not confirmed potential easement encroachments or conflicts. The Contract Documents do not identify all construction obstacles, utilities, unusual site conditions, trees, fences, landscaping, garages, houses, buildings, etc.
    C. Contractor shall protect in place all utilities and adjacent infrastructure (including but not limited to, subgrade, backfill, streets, driveways, sidewalks, etc.) by whatever means necessary. Any damage, collapse, or defects caused to private or public utilities or adjacent infrastructure due to construction activities, regardless of the

Contractor's means and methods, shall be repaired by the Contractor at no additional cost to the City.

D. Once an open cut repair is identified, the Contractor shall determine all utility relocation requirements and construction obstacles. Contractor shall coordinate protection, relocation, and repair, at no additional cost to Owner, with the respective utility owner and the Engineer.

E. Contractor shall make additional investigations or surveys, prior to submitting a bid, at his/her expense, as they deem necessary to evaluate the site conditions which may affect his/her bid or performance of the Work.

22. EXISTING STRUCTURES AND YARD FEATURES

All fences, walls, sheds or other structures or appurtenances removed for construction purposes, and any existing yard feature or other item damaged by the Contractor shall be replaced or repaired to equal or better than pre-construction condition by the Contractor.

23. SODDING.

Established lawns which are disturbed by project-related construction shall be restored with sod to original or better condition, unless otherwise specified by the Engineer, within three weeks of initial disturbance.

24. PERMITS AND DEGRADATION FEES.

Contractor shall be responsible for all costs of permits and degradation fees pertaining to the scope of work in this contract. Public Works Department will require an excavation permit for each individual excavation and a degradation fee for each area of pavement disturbed within the street right-of-way, in addition to a traffic control permit if required.

25. CONCRETE ENCASEMENTS.

Contractor shall be responsible for reestablishing all concrete encasements encountered on project. Encasements shall be returned to like or better condition.

26. TRENCH LENGTH

Trench length for sanitary and combined sewer excavation shall not exceed 100 feet of open cut trench or be open longer than two weeks at any given time without approval from the Owner. Excavations shall be protected at all times as specified in Division 1 and as required by local, State, and Federal regulations.

End of Section.

ORDINANCE NO. 211030

Amending Code of Ordinances Section 70-39 pertaining to the authority of the Public Works Director to close streets by repealing said section and enacting in lieu thereof a new section of like number and subject matter to add requirements to the street closure policy.

BE IT ORDAINED BY THE COUNCIL OF KANSAS CITY:

Section 1. That Section 70-39, Code of Ordinances, pertaining to the authority of the Public Works Director to close streets, by repealing said section and enacting in lieu thereof a new section of like number and subject matter to read as follows:

Sec. 70-39. Authority of Director to close streets, sidewalks and other travelways; authority to establish emergency parking restrictions.

(a) *Definitions.* As used in this section:

Alley means a street or highway intended to provide access to the rear or side of lots or buildings in urban districts and not intended for the purpose of through vehicular traffic.

Active Work Zone means where construction, maintenance or utility workers are on the roadway or sidewalk or on the shoulder of the roadway and workers are adjacent to an active travel lane.

Average Daily Traffic (ADT) means the following expected average daily traffic for the road classifications in the City's Major Street Plan, approved by City Council Ordinance 40346, October 7, 1971 as amended, unless an applicant provides traffic counts obtained under the supervision of a professional engineer, in which case those counts, if approved by the City, may be used in lieu of the values specified herein.

Classification	Expected ADT	ADT to be used
Expressways	At least 15,000 veh. per day	15,000 veh. per day
Primary arterials	At least 10,000 veh. per day	10,000 veh. per day
Secondary arterials	5,000 to 10,000 veh. per day	5,000 veh. per day
Other streets	Less than 5,000 veh. per day	500 veh. per day

Block means a piece or parcel of land entirely surrounded by public highways, streets, streams, railway rights-of-way or parks, or a combination thereof. The Director of Codes Administration shall decide any question regarding the limits or extent of a block.

Detour distance means:

(1) The distance of a lane closure including approaches if only a portion of the public right-of- way is closed so that traffic is diverted to different lanes in the same public right-of- way as determined by a traffic control plan approved by the Director of Public Works, and

(2) The distance of the alternate route as determined by a traffic control plan approved by the Director resulting from a complete closure of the public right-of-way.

Director means the Director of Public Works of Kansas City unless otherwise defined herein.

Emergency means a condition that poses a clear and immediate danger to life or health, or a significant loss of property or requires immediate repair or replacement in order to restore service to a customer.

Major Street Plan means the original document approved by the council by Ordinance No. 40346 on October 7, 1971, as amended from time to time.

Person means an individual, firm association, partnership, limited liability company, corporation or any other organization.

Right-of-way means an area of land designated and reserved for public travel whether vehicular or pedestrian and includes a street, a median, a parkway, pedestrian sidewalk and bikeway.

Traffic control permit fee formula means the basic formula to determine the amount of the fee for closing driving lanes of a road to be applied as follows:

The ADT for the designated classification of the road is multiplied by the number of days for closure of the street or part thereof, multiplied by the detour distance in linear miles, multiplied by the unit cost, multiplied by the specified factor for direction of travel, multiplied by the specified factor for driving lanes.

Unit cost (UC) shall be $0.17 per linear mile which shall be adjusted annually to the nearest cent by the Director to reflect the change in the consumer price index (all items/all urban consumers/Kansas City, Missouri/Kansas) published by the United States Department of Labor, Bureau of Labor Statistics.

Weekend means the period from Friday evening at 5:00 p.m. through Monday morning at 7:00 a.m.

(b) *Traffic control permits.* The Director shall have authority to close or issue a permit to close any street, sidewalk, or any other City maintained public right-of- way or part thereof when, in the Director's opinion, the closing is necessary for construction, maintenance, or for the protection of public health or safety or other special condition. Except for an emergency, no street, sidewalk or other City maintained portion of public right-of-way shall be closed by any person to traffic for any purpose without first obtaining a traffic control permit from the Director of Public Works. In the event a person causes a closure required by an emergency, such person shall file an application for a traffic control permit and pay the appropriate fees associated therewith the next regular business day after the closure. The Director shall have authority to establish reasonable regulations for the issuance, use, revocation and denial of such permits. Nothing in this section shall authorize the use of a public sidewalk for a commercial purpose.

(c) *Application fee.* An application fee of $88.00 shall accompany each application for a traffic control permit. The application fee is to defray the various costs incurred by the City in investigating and processing the applications and issuing the permit and inspection of the site of the traffic control. The application fee is not refundable.

(d) *Form of application.* An application for a traffic control permit shall be completed on a form furnished by the Director and shall include a detailed traffic control plan.

(e) *Traffic control plan.* A traffic control plan submitted to the Director for approval shall comply with the requirements of the Manual of Uniform Traffic Control Devices (MUTCD) in force on the date of the application and shall include a dimensioned drawing that identifies the following:

(1) The location of the right- of-way to be closed, including all approaches.

(2) The location of a detour route.

(3) The location of all traffic control devices required for the closure of the right-of-way and signage for the detour route(s). No traffic control device shall be placed more than 300 feet from an active work zone unless approved by the Director prior to the placement of the traffic control device.

(4) If applicant does not provide a traffic control plan, upon request by the applicant, the Department of Public Works will prepare a plan and applicant shall pay the City a nonrefundable fee in the amount of the direct costs and overhead incurred by the Department of Public Works as determined by the Director. In no event will such fee be less than $150.00.

(5) The traffic control plan shall anticipate the performance of continuous construction activities. If construction activities are not being continuously performed within the entire active work zone for a period of 48 hours, excluding

weekends, the permit holder must immediately restore the work zone and remove traffic control devices unless exempted by the Director.

(f) *Traffic control permit fees.* In addition to the application fee, and a traffic control plan preparation fee if applicable, a traffic control permit fee shall be charged for the closure of the public right-of- way. The amount of the traffic control permit fee shall be the sum of the fees for each direction of travel determined by applying the traffic control fee formula using the following factors:

(1) Factor for direction of travel. For a two-way street, the factor for each direction of travel shall be 0.58. For a one-way street, the factor for direction of travel shall be 1.17.

(2) Factor for driving lanes. The factor for driving lanes shall be as set out in the following chart:

Total number of driving lanes for the direction of travel	Number of driving lanes closed for the direction of travel				
	1	2	3	4	5
1 lane	1.15				
2 lanes	0.46	1.17			
3 lanes	0.23	0.69	1.17		
4 lanes	0.17	0.46	0.75	1.17	
5 lanes	0.12	0.40	0.64	0.81	1.17

(3) For lane closures between 9 a.m. and 4 p.m. if the lane is otherwise opened for public travel, the traffic control permit fee shall be reduced by 50 percent. For lane closures between 6 p.m. and 7 a.m. if the lane is otherwise opened for public travel, the traffic control permit fee shall be reduced by 70 percent. If the closure of a lane is limited to Saturday, Sunday or a holiday, the traffic control permit fee shall be reduced by 70 percent.

(4) For each alley within a block, the traffic control permit fee shall be $1.74 per day or portion thereof.

(5) Turn lanes and lanes for bus stops shall be treated as driving lanes.

(6) For intersections, the lanes for each direction of travel of the intersecting street shall be treated separately.

(7) The minimum detour distance to be used to calculate the traffic control permit fee shall be 0.0625 miles.

(8) Parking lanes with meters: For parking lanes with meters, the traffic control permit fee shall be $3.47 per meter per day or portion thereof, except for Saturday, Sunday and holidays.

(9) Parking lanes without meters: For regulated parking lanes without meters, the traffic control permit fee shall be 63 cents per day or portion thereof for each 20 feet of such right-of- way closed.

(10) A parking lane with designated hours for parking shall be considered a driving lane if it is closed during the hours when parking is prohibited.

(11) Sidewalk/non-roadway area: For sidewalk/non roadway area, the traffic control permit fee shall be 67 cents per day or portion thereof for each 20 feet of sidewalk or non-roadway area of such right- of-way closed. If sidewalk/non-roadway area is closed in conjunction with the adjacent lane closure, the traffic control permit fee for sidewalk/non-roadway area shall be reduced by 50%.

(g) *Annual permits.* In lieu of a traffic control permit issued by the Director under the requirements contained in subsections (c), (d), (e), and (f) of this section, the Director may issue an annual traffic control permit for each construction or maintenance vehicle used in a partial blockage of a street, sidewalk, or other City maintained public right-of-way to a qualified applicant complying with all of the following conditions:

(1) Those utilities and other companies operating under a franchise agreement with the City, telecommunications companies paying the occupational license taxes required by sections 40-360 and 40-361, Code of Ordinances, City Departments, and contractors acting as an agent for same, if experienced in proper traffic control procedures and approved by the Director, and the approved agent(s) for the recognized statewide utility locating network, of which the City is a member, are eligible for annual traffic control permits.

(2) An annual traffic control permit issued for and exclusively assigned to a particular vehicle of the qualified applicant.

(3) An annual traffic control permit shall not apply to more than one right- of-way closure during the same time period.

(4) An annual traffic control permit shall not apply to closures involving more than one half of the total number of traffic lanes of a street, to closures that extend beyond 500 feet, and closures that include an intersection of two streets.

(5) The annual traffic control permit will only exempt the permit holder from the requirements for an individual traffic control permit if:

a. The reason for the closure is nondestructive work in the public right-of-way; or

b. An excavation including all pavement is completely restored and open for normal traffic flow in the street, sidewalk or other City maintained right-

of-way within 72 hours, provided that temporary street surface repairs with cold mix asphalt patching material are acceptable during the months of November through March.

(6) If approved by the Director for an annual traffic control permit, payment of the annual traffic control permit fee to the City in the amount of $352.00.

(7) The Director is authorized to establish reasonable regulations for the issuance, use, and revocation of annual traffic control permits.

(h) *Plumbing traffic control permits.* For closure of a street, not identified as a major street in the City's Major Street Plan, required for water/sewer main connections and disconnections performed by a plumber who has obtained a permit to excavate in such right-of-way for making a connection or disconnection of a private water or sewer line to a City main line, such plumber may obtain a plumbing traffic control permit for the life of such excavation permit, by payment of an additional fee of $28.00 per excavation permit.

(i) *Time for restoration of traffic control devices.* All permanent traffic control devices including pavement markings and signs disturbed by work performed pursuant to a traffic control permit shall be restored by the permit holder within 72 hours after completion of the work.

(j) *Festivals.* For closure of a street required by a festival, the applicant shall certify that no less than ten days prior to the proposed festival, all owners or property managers of property adjacent to the street closure have been notified in writing of the (1) name of the event; (2) name of the sponsor organization, if any, including mailing address and telephone number; and (3) date, starting and ending times of the event. The applicant is responsible for collecting and managing recyclable materials and trash generated in conjunction with the festival in accordance with procedures established by the Director, and for post-event cleanup of the streets, sidewalks and public ways. The applicant for a festival permit shall meet all the requirements set forth in this section including the provisions of the application fee, traffic control plan fee if applicable, and the traffic control permit fee.

(k) *Neighborhood block party permits.*

(1) The neighborhood block party permit authorizes the applicant to barricade a specified portion of a street, not identified as a major street in the City's Major Street Plan, using City approved barricades, denying access to through traffic (except emergency vehicles and residents who reside within the barricaded area) to conduct a neighborhood block party. No fee shall be charged for a neighborhood block party permit.

(2) The applicant must be either a neighborhood resident or the neighborhood homes association group. The applicant shall be made on a form provided by the Director at his office in City hall. The applicant must provide evidence on the application

form that all of the residents who live in the blocked off area have been notified in writing of the proposed neighborhood block party and that a minimum of 60 percent of these residents are in favor.

(3) Neighborhood block parties shall be conducted only between the hours of 7:00 a.m. and 10:00 p.m. The applicant is responsible for collecting and managing recyclable materials and trash generated in conjunction with the neighborhood block party in accordance with procedures established by the Director and for post-event cleanup of the streets, sidewalks and public ways.

(l) *Trailers or dumpsters.* The fee to place a trailer or dumpster in the sidewalk, non-roadway area of the right-of- way or street right-of- way shall consist of an application fee of $59.00 and a traffic control permit fee resulting from that obstruction within the right-of- way. For the placement of a single trailer or dumpster, not in excess of 50 feet in length, used for purposes of construction or demolition work, placed in the sidewalk, non-roadway area of the right-of-way or the curb lane of street right-of- way areas of a street, not identified as a major street in the City's Major Street Plan, an applicant may elect to pay a flat traffic control fee of $12.00 per day or portion thereof instead of the other traffic control permit fees provided in this section, in which case there shall be no application fee charged.

(m) *Waiver.* Fees set forth in this section shall not apply to the following:

(1) Except for the Water Services Department and the Aviation Department, City Departments and their contractors performing roadway or roadway feature related work, including landscaping, maintenance or repair.

(2) Firms or agencies required by the City to relocate utilities.

(3) Transportation facility improvement projects funded by federal, state or local governments.

(4) When the Director finds that it is necessary to close the street for the immediate protection of public safety.

(5) That portion of a project by a private developer that involves improvements to existing infrastructure and facilities in the public right of way, including but not limited to utilities, sidewalks, acceleration lanes, deceleration lanes, turn lanes and traffic signals, so long as the increase of the operating capacity or revised geometrics of said infrastructure and facilities is not primarily required to serve the development.

(n) *Double fees.* Absent an emergency situation, as defined by the Director in rules and regulations which reflect the need for prompt action to protect the public safety, the fees

established by this section shall be doubled for any permit and associated inspection if work is commenced prior to obtaining a permit.

(o) *Emergency parking restrictions.* The Director may establish emergency parking restrictions or prohibitions upon any street or part thereof upon the request of any responsible applicant when the parking restrictions are necessary for construction or other special conditions. The applicant shall notify the Public Works Department immediately when construction is complete or when any special conditions cease to exist.

(p) *Traffic control devices.* The Director may install, allow or require responsible applicants to install, traffic control devices giving notice of the approved emergency parking restrictions or prohibitions permitted under subsection (o) of this section. If an applicant installs traffic control devices, then the applicant shall immediately notify the Public Works Department when the traffic control devices are installed and shall immediately remove the traffic control devices when construction is complete or the special conditions end.

(q) *Use of fees for traffic control purposes.* All fees collected pursuant to this section shall be allocated to the Public Works Department to be used for traffic control purposes.

(r) *Adjustment of fees.* The City Manager shall have the authority to adjust the fees listed in this section to reflect the change in the consumer price index (all items / all urban consumers/ Midwest urban) published by the United States Department of Labor, Bureau of Labor Statistics. The adjustments, if any, shall be made annually by the Director in conjunction with the adoption of the annual budget of the City by filing a notice with the City Clerk.

Approved as to form and legality:

for Nicole Rowlette
Assistant City Attorney

Authenticated as Passed

Quinton Lucas, Mayor

Marilyn Sanders, City Clerk

DEC 09 2021
Date Passed

SECTION 01020 – RECORD DOCUMENTS

PART 1 - GENERAL

1.01 SUMMARY

A. Contractor shall maintain, in a safe place at the Site, one updated record copy of all Drawings, Standards and Specifications, Addenda, Shop Drawings, Requests for Interpretation (RFIs), Requests for Proposal (RFPs), Work Change Directives (WCDs), Change Orders, other written interpretations or clarifications of the contract documents, survey information (including approved cut sheets) and all other documents relevant to the Work.

B. All such documents shall be kept in order, good condition and shall be continuously updated to indicate all work installed and all changes made during construction.

C. No work shall be allowed in the absence of these record documents.

D. This document also outlines electronic data requirements and defines the survey requirements for the development of Field-Marked Drawings, As-Built Drawings and Conforming to Construction Drawings.

1.02 SPECIFICATION MODIFICATIONS

A. It is understood that throughout this section these Specifications may be modified by appropriate items in Section 01015 – Specific Project Requirements or as otherwise indicated on the Contract Drawings.

1.03 RELATED SECTIONS

A. Section 00700 – General Conditions.

B. Section 01015 – Specific Project Requirements.

C. Section 01300 – Submittals.

D. Section 01335 – Document Management.

E. Section 02686 – CCTV Inspection.

1.04 CODES AND STANDARDS

A. CAD Standards – United States National CAD Standards.

1.05 DEFINITIONS

A. Drawings – As defined by Section 00700 – General Conditions.

B. Approved for Construction Drawings – Any drawing or sketch that has been issued to the Contractor by the City for the purposes of constructing the Work. These include, but are not limited to, the following: Drawings, revisions to the Drawings, information issued as part of change orders and information issued as part of work change directives.

C. Field-Marked Drawings (Red Line Markups) – A copy of the Approved for Construction Drawings that is maintained and updated daily by the Contractor during construction detailing all work completed and depicting all changes made to the Work during construction.

D. As-Built Drawings – The completed Field-Marked Drawings that include the signed certification language from both the Contractor and Surveyor.

E. Conforming to Construction Drawings – The Approved for Construction Drawings that have been revised to reflect the changes noted on the As-Built Drawings. For these drawings, the CAD files are updated and a new set of drawings is created.

F. Record Drawings – All drawings used or developed as part of the Work. Record Drawings include, but are not limited to, the following: Approved for Construction Drawings, Field-Marked Drawings, As-Built Drawings and Conforming to Construction Drawings.
G. Record Documents – As defined by this Section, Section 01015 and Section 00700 – General Conditions, Article 6 Contractor's Responsibilities.

1.06 INFORMATION PROVIDED BY THE CITY

A. The City will provide the Contractor a suitable copy of the Approved for Construction Drawings in an electronic/CAD format.

1.07 SUBMITTALS

A. Submit as specified in Section 01300 – Submittals.
B. Submittals include, but are not limited to, the following:
   (a) All Record Documents – As required by this Section, Section 1015 and Section 00700 – General Conditions, Article 6, Contractor's Responsibilities, paragraph Record Documents.
   (b) Field-Marked Drawings.
   (c) As-Built Drawings.
   (d) Conforming to Construction Drawings.
   (e) Other Record Documents as requested by the City.

1.08 QUALITY ASSURANCE

A. The Contractor is responsible for the quality assurance and quality control of the Work.

PART 2 - PRODUCTS

Not used.

PART 3 - EXECUTION

3.01 SURVEY REQUIREMENTS

A. All field books, notes, videotapes and other data developed by the Contractor in performing surveys required as part of the Work shall be available to the City for examination throughout the construction period. All such data shall be submitted to the City with the other documentation required for final acceptance of the Work.
B. General Requirements:
   (a) The Contractor shall provide survey grade information for the locations and elevations of the Work as described herein. Surveys shall be conducted by a Professional Land Surveyor, licensed in the State of Missouri (Surveyor).
   (b) Vertical Datum – All elevations shall be indicated in North American Vertical Datum of 1988 (NAVD 88) in feet and decimals of a foot.
   (c) Horizontal Control – Coordinates shall be referenced to the North American Datum of 1983 (NAD 83), State Plane Missouri West Zone FIPS 2403 US Feet coordinate system, Kansas City Metro Control. Statewide Missouri Geographical Reference System monuments, Project monuments and Certified Land corners shall be used as references to determine State Plane coordinates. All control monuments used in the survey work shall be listed with reference ties and shown on the Record Drawings.

C. Water Systems:
   (a) Fire Hydrant Assemblies – Provide survey point (location and elevation) at the top of the operating nut for each fire hydrant.
   (b) Fittings – Provide survey point (location and elevation) at the center of each fitting (i.e. bends, tees, valves, etc.). Survey shall be taken at the top of the fitting. Provide the elevation of finished grade or improvements at the top of the fitting.
   (c) Pipe Profile – Provide survey points (location and elevation) at the center point of all piping at a maximum spacing of 50 feet. Survey shall be taken on the top of the pipe. At the same location, provide the elevation of finished grade.
   (d) Valves, Valve Vaults, Meter pits and Other Structures – A survey is required to verify the location of all new valves, valve vaults, meter pits or other structures. The survey shall include, but is not limited to, the following:
      (i) Location of the Structure – Provide coordinates for the center of the access cover.
      (ii) Top Elevation – Provide the top elevation of the structure at the center of the access cover.
D. Wastewater Systems:
   (a) New Manholes – A survey is required to verify the location of all new manholes. The survey shall include, but is not limited to, the following:
      (i) Location – Verify the "Locating Point" shown on the Approved for Construction Drawings or standard detail. Verify all coordinate data shown on the Approved for Construction Drawings. If no such information is provided, the Locating Point shall be the center of the manhole cover.
      (ii) Top Elevation. – Provide the elevation of the top of the structure at the Locating Point.
      (iii) Pipe Inverts – Provide the invert elevation and flow direction of all pipes that penetrate the structure (flowline in - FL IN) and exit the structure (flowline out - FL OUT).
      (iv) Manhole Invert – Provide the elevation of the invert at the center of the manhole if different than the pipe inverts.
   (b) Existing Manholes – A survey is required to verify the location of all existing manholes that are modified as part of the Work. The survey shall include, but is not limited to, the following:
      (i) Location of the Structure – Verify the "Locating Point" shown on the Approved for Construction Drawings or standard detail. Verify all coordinate data shown on the Approved for Construction Drawings. If no such information is provided, the Location Point shall be the center of the manhole cover.
      (ii) Top Elevation – Provide the elevation of the top of the structure at the Locating Point.
      (iii) Pipe Inverts – Provide the invert elevation and flow direction of all pipes that penetrate the structure (flowline in - FL IN) and exit the structure (flowline out - FL OUT).
      (iv) Manhole Invert – Provide the elevation of the invert at the center of the manhole if different from the pipe inverts.
E. Storm Water and Green Infrastructure Systems:
   (a) A survey is required to verify the location of all new Green Infrastructure, Storm Water Structures, Junction Boxes, Manholes, Inlets and all other related structures. The survey shall include, but is not limited to, the following:

(i) Location of the Structure – Verify the Locating Point shown on the Approved for Construction Drawings or standard detail. Verify all coordinate data shown on the Approved for Construction Drawings. The locating point for curb inlets is center of inside face of inlet wall. If no other locating information is provided for other structures, the Locating Point shall be the center of the access cover.

(ii) Top Elevation – Provide the elevation of the top of the structure at the Locating Point.

(iii) Pipe Inverts – Provide the invert elevation and flow direction of all pipes that penetrate the structure (flowline in - FL IN) and exit the structure (flowline out - FL OUT).

(iv) Manhole or Structure Invert – Provide the elevation of the invert at the center of the manhole or structure if different than the pipe inverts.

(b) Culvert:

(i) A survey is required to verify the location of new culverts. The survey shall include, but is not limited to, the following:

(ii) Location – The Locating Points shall be the center line of each culvert barrel at the upstream and downstream end of each. The location of each culvert barrel is to be provided.

(iii) Invert – Provide the upstream and downstream invert elevation of each culvert barrel.

(c) Channels and Ditches:

(i) Profile – Provide survey points (location and elevation) at the upstream and downstream end of the channel and along the channel at a maximum 50-foot intervals and at all bends and changes in alignment.

(ii) Survey points shall be taken at finished grade at the centerline, toes of side slopes or walls and top elevation of the high flow channel on both sides of the channel. If water is present in the channel or ditch, provide water surface elevation on both sides of the channel.

(d) Detention Areas:

(i) For any surface feature designed to detain or retain storm water runoff (i.e., detention basins, rain gardens, bio-retention cells, etc.) an as-built survey of the feature is required.

(ii) Enough survey points shall be taken to generate 1-foot contours of the detention or retention area and any containment berms.

(iii) Provide survey points (location and elevation) for both ends of weirs, all weir high and low points (if top of weir is not level) and other flow control structures, inlets and outlets.

(iv) Provide survey points (location and elevation) for both ends of weirs and all weir high and low points (if top of weir is not level) of the principle spillway structure.

3.02 FIELD-MARKED DRAWINGS

A. The Contractor shall continuously maintain a set of Field-Marked Drawings which details all work completed and shows all changes or deviations made by the Contractor from the Approved for Construction Drawings. Where the Approved for Construction Drawings are not detailed and allow for flexibility during construction, the Contractor shall include the detailed information on how the Work was constructed. These adjustments shall include, but are not limited to, field adjustments and change orders.

B. Field-Marked Drawings shall be prepared using survey grade information to show the horizontal and vertical location of the Work after completion of construction. Connection details may be sketched using field run measurements.
C. Mark new information that is important to the City that is not shown on Drawings or Shop Drawings.
D. Note related Change Order numbers where applicable.
E. Include the following:
   (a) Field changes of dimension and detail.
   (b) Changes made by Change Order or other modifications.
   (c) Details not on original Drawings.
   (d) Horizontal and vertical location of all underground utilities and all other concealed elements that would complicate and make difficult/expensive to maintain the installed asset at a later date.
F. Precision of Measurement:
   (a) Where survey measurements are not required (sketching connection details) – elevations, stationing, distances and measurements shall be expressed to the nearest 0.10 foot.
   (b) All other Work requires survey information – elevations, station, distances and measurements shall be expressed to the nearest 0.01 foot.
G. Field changes or additions shall be designated in RED. Hard copy and electronic (PDF) deliverables shall be provided in color.
H. Information shall be clearly distinguishable on hard copy mark-ups and in the electronic files.
I. If the Contractor observes inaccurate information pertaining to existing conditions, the correct information shall be noted in the Field-Marked Drawings.
J. The Contractor shall submit 30%, 60% and 90% check prints with the corresponding percent complete of work. The check prints shall be submitted with the Application for Payment. Failure to provide the check prints shall cause the Application for Payment to be returned to the Contractor.

3.03 AS-BUILT DRAWINGS

A. Upon completion of the Work and before the Application for Final Payment, the Contractor shall prepare the As-Built Drawings by completing annotations to the Field-Marked Drawings and adding the required certification statements.
B. Surveyor's Certification:
   (a) Each drawing shall be modified to include a certification statement and signature block as described below.
   (b) Every sheet of the Field-Marked Drawings must be reviewed, signed and sealed by a Professional Land Surveyor, licensed in the State of Missouri and must include the following statement on the title block inside the box marked "for WSD use" and near the Surveyor's professional license seal:

      (i) Water Systems

      Each sheet of these Record Drawings and attached Survey Cut Sheets for the Work have been reviewed and approved by the Professional Land Surveyor whose seal is affixed to this Record. The horizontal control, coordinates and elevations shown on these Records are accurate and are based on the Missouri Coordinate System of 1983, West Zone and NAVD88 datum, with the date of adjustment. These Records have been revised, as required in Section 01000, 1.20 of the Standards and

Specifications for Water Main Extensions and Relocations, under my personal supervision to show the true and accurate measurements of the work as it was actually constructed.

(ii) Wastewater, Storm Water and Green Infrastructure Systems

Each sheet of these Record Drawings and attached Survey Cut Sheets for the Work have been reviewed and approved by the Professional Land Surveyor whose seal is affixed to this Record. The horizontal control coordinates and elevations shown on these Records are accurate and are based on the Missouri Coordinate System of 1983, West Zone and NAVD88 Datum. These Records have been revised under my personal supervision to show the true and accurate measurements of the work as it was actually constructed.

C. Contractor's Certification:
   (a) Each drawing shall be modified to include a certification statement and signature block as described below.
   (b) The Contractor shall provide certification that the Field-Marked Drawings reflect the conditions that were constructed.
   (c) The Contractor shall review the Field-Marked Drawings and verify all information is accurate. The Contractor shall verify that all changes to the Work have been documented. The Contractor shall sign each sheet of the Record Drawings with the following certification(s):

(i) Water Systems

I hereby certify that this Record correctly depicts the Work constructed as to size, material, horizontal location, vertical location and finished grade as shown on the approved construction drawings or their revision. The Work was done in accordance with these Records and the current version of the Standards and Specifications for Water Main Extensions and Relocations.

Contractor: _____ *Date:* _____

Name (print): _____ *Title:* _____

Signature: _____

(ii) Wastewater, Storm Water and Green Infrastructure Systems

I hereby certify that this Record correctly depicts the Work constructed as to size, material, horizontal location, vertical location, grade of installed piping systems and finished grade as shown on the approved construction drawings or their revision. The Work was done in accordance with these Records.

Contractor: _____ *Date:* _____

Name (print): _____ *Title:* _____

Signature: _____

D. Submittals – Submit As-Built Drawings in accordance with paragraph SUBMITTALS. As-Built and Conforming to Construction Drawings must be approved by the City before the Contractor submits the Application for Final Payment.

E. Mark each document "AS-BUILT DRAWINGS" in neat, large print letters.
F. The cover sheet of the project shall be included. The cover sheet shall include all required As-Built certifications and shall clearly show that the drawings are AS-BUILT.

3.04 CONFORMING TO CONSTRUCTION DRAWINGS

A. The Contractor shall prepare Conforming to Construction Drawings as required by this Section and Section 01015 – Specific Project Requirements.
B. Conforming to Construction Drawings shall be submitted and accepted by the City before the Contractor may submit the Application for Final Payment.
C. The Contractor shall edit the CAD drawings to reflect the changes shown on the As-Built Drawings. All line work and text shall be revised and edited to accurately reflect the information provided in the As-Built Drawings. Line work shall be drawn to scale in the coordinate system and datum specified herein.
D. Version – CAD drawings shall be developed and submitted in the latest version of AutoCAD® .dwg format or AutoCAD® Civil 3D. See Section 01015 – Specific Project Conditions for additional information regarding CAD formats and standards.
E. CAD Standards – Comply with United States National CAD Standards.
F. The cover sheet of the project shall be included. The cover sheet shall include all required as-built certifications and shall clearly show that the drawings are as-built.
G. Conforming to Construction Drawings shall have a “CONFORMED TO CONSTRUCTION” label clearly and prominently shown on each sheet, preferably in the lower right-hand corner of the drawing.
H. Conforming to Construction Drawings shall be labeled with the following information:
   (a) Project Name.
   (b) WSD Project Number.
   (c) WSD Work Order Number.
   (d) WSD Drawing Number.
   (e) Date of publication.
I. Submittals – Submit Conforming to Construction Drawings in accordance with paragraph SUBMITTALS.

3.05 OTHER RECORD DOCUMENTS

A. As defined by Section 00700 – General Conditions, Article 6 – Contractor’s Responsibilities.
B. Coordinates Table – Provide a Microsoft Excel spreadsheet that contains the coordinates of every asset installed or adjusted as part of the Work.
C. Survey Cut Sheets.
D. Television Inspection data files as specified in Section 02686 – CCTV Inspection.
E. Other information as specified in Section 01015 – Specific Project Requirements.

3.06 DELIVERABLES AND SUBMITTALS

A. Electronic Submittals:
   (a) All electronic deliverables (drawings, coordinates table, etc…) shall be made through the approved document management system. See Section 01335 – Document Management.
B. As-Built Drawings:
   (a) One (1) hard copy on paper for review and approval.
   (b) One (1) electronic copy in PDF format.

(c) One (1) electronic copy in the latest version of AutoCAD® .dwg format.

C. Conforming to Construction Drawings:
   (a) One (1) signed, sealed and certified hard copy on Mylar or Vellum.
   (b) One (1) signed, sealed and certified hard copy on paper.
   (c) One (1) signed, sealed and certified electronic copy in PDF format.
   (d) One (1) signed, sealed and certified electronic copy in the latest version of AutoCAD® .dwg format.

D. Record Documents:
   (a) Submit Record documents in accordance with Section 00700 – General Conditions, Article 14 – Payments to the Contractor and Completion.
   (b) Submit other documents as required by paragraph 3.05 OTHER RECORD DOCUMENTS of this section.
   (c) One (1) hard copy on paper.
   (d) One (1) electronic copy in PDF format.
   (e) As specified in other sections.

E. Electronic (PDF) Documents:
   (a) Documents shall be full scale.
   (b) Markups shall be noted in RED.
   (c) Minimum resolution shall be 600 dpi.

3.07 CORRECTIONS DURING THE WARRANTY PERIOD

A. The Record Documents shall be an integral part of the work guaranteed by the Contractor's Performance and Maintenance Bond. If during the three-year maintenance period the City determines that further revisions or corrections are necessary to make the Record Documents accurate, the Contractor shall make or cause the revisions or corrections to be made at no additional cost to the City.

END OF SECTION

SECTION 01210 – ALLOWANCES

1.1 RELATED DOCUMENTS

A. Drawings and general provisions of the Contract, including SECTION 00700-GENERAL CONDITIONS and SECTION 00800 – SUPPLEMENTARY CONDITIONS and other Specification Sections, apply to this section.
B. Form 00413 Allowance Form.
C. Form 01210.01 Allowance Authorization.

1.2 SUMMARY

A. This section includes administrative and procedural requirements governing allowances.
B. The allowance is miscellaneous items not otherwise identified for repair and/or replacement on the Contract Drawings or Specifications.
C. Funds will be drawn from the allowance by issuance of Form 01210.01 Allowance Authorization.
D. At Project closeout, unused amounts remaining in the allowance will be credited to the Owner by Change Order.

1.3 PROPOSALS

A. At Owner's request, the Contractor shall prepare a written proposal with cost breakdown for each proposed work assignment under the allowance. Include recommendations that are relevant to performing the work.
B. Contractor shall not proceed with allowance work until Owner issues an Allowance Authorization.

1.4 PREPARATION

A. Contractor shall complete each authorized item in accordance with the standard specification within the Project Manual.
B. Contractor shall coordinate with Water Services Engineer and Resident Inspector prior and obtain written approval prior to using the allowance.

1.5 SCHEDULE OF ALLOWANCES

A. To complete miscellaneous Work not specifically identified in the Contract Documents.

End of Section.

CITY OF FOUNTAINS
HEART OF THE NATION
KANSAS CITY
MISSOURI

ALLOWANCE AUTHORIZATION

Project/Contract Number: _____

Project Title: _____

To: _____
_____
Re: _____
_____

Authorization Number: _____
From: _____
Date: _____
Contract For: _____

You are authorized to perform the following item(s) of work and to adjust the Allowance Sum accordingly:

This is NOT a CHANGE ORDER and does NOT INCREASE OR DECREASE the CONTRACT AMOUNT.

Original Allowance	$_____
Allowance Expenditures prior to this Authorization	$_____
Allowance Balance prior to this Authorization	$_____
Allowance will be [❑ increased] [❑ decreased] by this Authorization	$_____
New Allowance Balance	$_____

APPROVAL RECOMMENDED

_____
Design Professional Date

_____
Construction Manager Date

_____
Project Manager Date

CITY APPROVAL

_____
City's Representative Date

CONTRACTOR ACCEPTANCE

_____
Contractor Date

❑ Attachments:

Distribution:
- ❑ City
- ❑ Contractor
- ❑ Construction Manager
- ❑ Design Professional
- ❑ Consultant
- ❑ Other

SECTION 01270 – ADJUSTMENT UNIT PRICE AND MEASUREMENT PROCEDURES

PART 1 – GENERAL

1.01 DESCRIPTION

A. This section describes the method by which construction of this project shall be measured and paid in accordance with the Adjustment Unit Prices. Should there be any conflicts between payment described in individual specification sections and this section, payment shall be made in accordance with this section. Any work shown on the Construction Contract Documents described in the specifications but not specifically covered by the bid items shall be included in other items of work.

B. The Base Bid shall be as calculated on Form 00412 Adjustment Unit Prices.

C. The Bid includes all profit, overhead, markups, labor, equipment, materials, incidental or ancillary work, permits, coordination, traffic control, submittals, bonds, insurance, and other costs required to provide a complete functioning project that satisfies the project specifications.

D. Form 00412 includes a listing of Adjustment Unit Prices items and Adjustment Unit Price costs. The final Contract Price shall be adjusted according to the final measured, used, or delivered quantities based on Form 00412 Adjustment Unit Prices. Measurement shall be as approved by the Owner.

E. The Owner may add or delete any quantity of work to the project as specified in Supplementary Condition SC-11.04 C.

PART 2 – ADJUSTMENT UNIT PRICE ITEMS

2.01 SANITARY SEWER PIPE OPEN CUT POINT REPAIR POINT REPAIR 5-FOOT (OR LESS) 8, 10, 12, 18, 21, AND 24-INCH PIPE (ADJUSTMENT UNIT PRICE LINES ITEMS 1-9)

A. This section refers to open cut replacement of 8-inch to 24-inch pipe. Replacement of sewer pipe by open cut excavation will be measured and paid by Each (EA) point repair completed. The point repair includes up to five (5) linear feet of pipe installed. The cost of the pipe replacement will be paid according to the appropriate diameter of pipe installed according with Form 00412 Adjustment Unit Prices. Additional footage of pipe installed exceeding five (5) linear feet shall be paid in accordance with Form 00412 Adjustment Unit Price Line Items 6-10.

B. Any active service lateral exposed during point repair construction shall be re-established by installing a wye connection and the service lateral shall be replaced to the limits of the right-of-way/permanent easement line via open cut replacement. The cost of these items includes five (5) linear feet of service lateral replacement as measured horizontally.

C. The cost for the additional length of service lateral installed exceeding five (5) linear feet shall be paid by the Adjustable Unit Price Line Item 29.

D. Corresponding service lateral connection shall also be re-established prior to backfilling the excavation. The contractor shall contact Water Services Sewer Line Maintenance Division prior to backfilling and the service connection shall be inspected by Water Services Sewer Line Maintenance Division prior to backfilling the excavation.
E. Contractor shall be responsible for protecting driveways throughout the construction. Any driveway damaged by construction activities shall be replaced at the no additional cost to Owner.
F. All costs associated with this item including locating the pipe to be repaired, excavation, the installation of sewer pipe, connections to existing sewer system, pipe fittings, restoring service connections with a wye connection, five (5) linear feet of service lateral, backfill, surface restoration including fencing, landscaping, street restoration, curb replacement, sidewalk replacement, driveway restoration, ADA ramps, and traffic control are to be included in the appropriate Adjustment Unit Price for the appropriate pipe size.
G. Include as part of these Adjustment Unit Price items, miscellaneous devices, accessory objects, and all necessary appurtenances required to complete installation.

2.02 <u>SANITARY SEWER PIPE POINT REPAIR</u>
<u>ADDITIONAL LINEAR FOOT POINT REPAIR 8, 10, 12, 18, 21, AND 24-INCH PIPE</u>
<u>(ADJUSTMENT UNIT PRICE LINE ITEMS 10-18)</u>

A. This section refers to open cut replacement of 8-inch to 24-inch pipe exceeding the first five (5) linear feet of point repair pipe installed. Replacement of sewer pipe by open cut excavation will be measured and paid per linear foot (LF) installed.
B. All costs associated with this item including excavation, the installation of sewer pipe, connections to existing sewer system, pipe fittings, restoring service connections within the limits of the open cut point repair with a wye connection, five (5) linear feet of service lateral, backfill, surface restoration including fencing, landscaping, street restoration, curb replacement, sidewalk replacement, driveway restoration, ADA ramps, and traffic control are to be included in the appropriate Adjustment Unit Price for the appropriate pipe size.
C. Contractor shall be responsible for protecting driveways throughout the construction. Any driveway damaged by construction activities shall be replaced at the no additional cost to Owner.
D. Any active service lateral exposed during point repair construction shall be re-established by installing a wye connection and the service lateral shall be replaced to the limits of the right-of-way/permanent easement line via open cut replacement. The cost of these items includes five (5) linear feet of service lateral replacement as measured horizontally.
E. The cost for the additional length of service lateral installed exceeding five (5) linear feet shall be paid by the Adjustable Unit Price Line Items 29.

F. Include as part of these Adjustment Unit Price items, miscellaneous devices, accessory objects, and all necessary appurtenances required to complete installation.

2.03 SANITARY SEWER CURED-IN-PLACE-PIPE (CIPP) LINING
8-INCH TO 24-INCH MAIN SEWER CIPP
(ADJUSTMENT UNIT PRICE LINE ITEMS 19-23)

A. This section refers to the Cured-In-Place Pipe (CIPP) Lining of 8-inch to 24-inch pipe. CIPP sewer pipe will be measured per linear foot (LF) installed. All costs associated with the installation of the CIPP, post-rehabilitation CCTV inspection and reports, CCTV data submittals, material testing and shipping costs, and surface restoration are to be included in the adjustment unit price cost item for the size of CIPP required.
B. The preliminary cleaning and CCTV will be paid according to Adjustment Unit Price Line Item 16.
C. Contractor shall submit supporting documentation, CCTV, and written explanation to Owner if CIPP lining cannot be completed prior to transferring repair to open cut repair list.
D. Contractor shall install a CIPP end seal on each end of every segment listed to be CIPP lined. The cost of the CIPP end seal shall be included in the appropriate size of liner installed. No separate payment shall be made for this item.
E. CIPP lining contractor shall be responsible for reinstating active service connections. CIPP lining contractor shall dye test as necessary to verify active service connections at no additional cost to the Owner. The CIPP lining contractor shall install a CIPP Point Repair in accordance with SECTION 06014 – CURED-IN-PLACE PIPE SECTIONAL POINT REPAIRS FOR SANITARY SEWERS for all re-instated non-active service connections, at no cost to the Owner.
F. Include as part of these Adjustment Unit Price items, miscellaneous devices, accessory objects, and all necessary appurtenances required to complete installation.
G. Contractor shall submit post-rehabilitation CCTV prior to payment. CCTV data needs to be reviewed by Owner/Design Professional prior to payment being made.

2.04 SANITARY SEWER CURED-IN-PLACE-PIPE (CIPP) LINING
PRELIMINARY CLEANING AND CCTV MAINLINE (8 TO 24-INCH)
(ADJUSTMENT UNIT PRICE LINE ITEM 24)

A. Cleaning shall include light cleaning, as well as any heavy cleaning of 8-inch to 24-inch sewer pipe necessary to perform pipe rehabilitation. Heavy cleaning with root cutters and mechanical chains are included in the cost of this item. Contractor shall submit supporting documentation, CCTV, and written explanation to Owner if the rehabilitation method shown in the plans is recommended to be changed. The cleaning and CCTV will be paid by linear foot (LF) inclusive of all pipe diameters.

B. Cleaning shall include light cleaning, as well as any heavy cleaning of sewer pipe necessary to verify the pre-rehabilitation condition for each main sewer segment and prepare the line for rehabilitation. Rehabilitation is defined as CIPP lining, open cut point repairs and total line replacement. Heavy cleaning with root cutters, tap trimming are included in the costs of this items.
C. No additional payment will be made for mainline sewer segments requiring reverse set-up or for locating manholes to perform complete CCTV. The cost for an open cut point repair to perform complete CCTV of the mainline sewer segment shall be paid per Line Items 12 through 23 (Section 2.02 and 2.03).
D. Contractor shall submit preliminary CCTV along with mainline and lateral rehabilitation recommendations prior to payment of Line Item CCTV data shall be reviewed and approved by Owner/Engineer prior to payment being made.

2.05 TOTAL LINE REPLACEMENT (INCLUDING SERVICE LATERAL CONNECTIONS)

OPEN CUT OR PIPE BURSTING 8-INCH TO 21-INCH PIPE (PAVED OR UNPAVED)

(ADJUSTMENT UNIT PRICE LINE ITEMS 25-27)

A. This section refers to open cut replacement or pipe bursting of 8-inch to 21-inch diameter sanitary sewer pipe. Replacement of sewer pipe, by either open cut excavation or pipe bursting, will be measured and paid per linear foot (LF) of installed pipe in accordance with the appropriate pipe diameter and surface type.
B. Unit price for Total Line Replacement includes installing service lateral connections and up to five (5) horizontal feet of service lateral for all active laterals. The cost for additional length of service lateral installed beyond five (5) horizontal feet shall be paid per linear foot (LF) in accordance with Line Item 29.
C. If a manhole not scheduled to be removed and replaced on a Total Line Replacement pipe is dismantled or damaged during open cut or pipe bursting, the Contractor shall replace the manhole as needed at no additional cost to the Owner.
D. If a surface feature, adjacent storm sewers or other underground utilities prevent open cut excavation on a Total Line Replacement pipe, the pipe shall be replaced via pipe bursting at no additional cost to the Owner. If a sag is present that cannot be corrected via pipe bursting on a Total Line Replacement pipe, the pipe shall be replaced via open cut excavation at no additional cost to the Owner.
E. All costs associated with these Line Items including, but not limited to, the installation of sewer pipe, service lateral connections, five (5) horizontal feet of active service laterals, connection to the existing sewer system, replacing concrete encasements, field investigations to locate and survey existing pipes and utilities, rebuilding of outside drop at manhole, and acceptance testing shall be included in the appropriate Adjustment Unit Price for the appropriate pipe diameter and surface type.

2.06 SERVICE LATERAL REPAIR/REHABILITATION
OPEN CUT LATERAL REPLACEMENT TO R/W OR EASEMENT
(ADJUSTMENT UNIT PRICE LINE ITEM 28)

A. The Adjustment Unit Price for the Open Cut Lateral Replacement is to be based on the installation of the service lateral connection to the main line pipe and a lateral length of five (5) horizontal feet and shall be measured per unit (EA) installed.
B. All costs associated with the Open Cut Service Lateral Replacement including the installation of the pipe and connection, pre-rehabilitation CCTV inspection, post-rehabilitation CCTV inspection, any cleaning of the main or lateral required to install the lateral connection, locating and verifying the lateral to be rehabilitated or replaced to the right-of-way or easement line, excavation, installation of PVC SDR 26, connecting it to existing sewer system, fittings, backfill, surface restoration including fencing, landscaping, street restoration, curb replacement, sidewalk replacement, driveway restoration, ADA ramps, and traffic control are to be included in this Adjustment Unit Price. Approximate lateral repair length to right-of-way is included in the Sewer Main and Lateral Rehabilitation Schedules. Payment will be based on actual service lateral liner installed.
C. Include as part of this Adjustment Unit Price item, miscellaneous devices, accessory objects, and all necessary appurtenances required to complete installation.
D. If a service lateral scheduled for an open cut lateral replacement is located within the limits of an open cut mainline rehabilitation item (e.g. a mainline open cut point repair or additional linear feet of mainline open cut point repair), the open cut lateral replacement, up to five (5) horizontal feet, is subsidiary to and shall be included in the Adjustment Unit Price for the mainline rehabilitation item.

2.07 SERVICE LATERAL REPAIR/REHABILITATION
ADDITIONAL LINEAR FEET OPEN CUT LATERAL REPLACEMENT
(ADJUSTMENT UNIT PRICE LINE ITEM 29)

A. The Adjustment Unit Price for the Additional Linear Feet Open Cut Lateral Replacement is to be based on the length of open cut service lateral installed beyond the first five (5) horizontal feet of open cut service lateral and shall be measured per linear foot (LF) installed, as measured horizontally.
B. All costs associated with this item including pre-rehabilitation CCTV inspection, post-rehabilitation CCTV inspection, any cleaning of the sewer/lateral required to install the additional length of lateral, installation of the additional length of lateral, all necessary connections and fittings, excavation, backfill, and surface restoration shall be included in this Adjusted Unit Price Line Item.
C. Include as part of this Adjustment Unit Price item, miscellaneous devices, accessory objects, and all necessary appurtenances required to complete installation.

2.08 SERVICE LATERAL REPAIR/REHABILITATION
LATERAL CONNECTION FULL WRAP CIPP SHORT LINER
(ADJUSTMENT UNIT PRICE LINE ITEM 30)

A. The Adjustment Unit Cost for the Lateral Connection Full Wrap CIPP Short Liner is to be based on a lateral length of 18-inches and shall be measured per unit (EA) installed.
B. All costs associated with the installation of the Lateral Connection Full Wrap CIPP Short Liner including pre-rehabilitation CCTV inspection, post-rehabilitation CCTV inspection, any cleaning of the sewer/lateral required to install the lateral connection liner, locating and verifying the lateral and lateral size to be rehabilitated, surface restoration and traffic control are to be included in this adjustment unit price cost.
C. Cleaning shall include light cleaning, as well as any heavy cleaning necessary to install the CIPP liner. Heavy cleaning with root cutters and mechanical chains are included in the cost of each item. Contractor shall submit supporting documentation, CCTV, and written explanation to Owner if lining cannot be completed.
D. For locations that the full wrap lateral liner is not allowed to be installed, the CIPP lateral to main connection liner repair system shall be "Top Hat" Lateral Sealing and Repair. The Contractor shall get approval from Owner prior to the installation of the "Top Hat" Lateral Sealing and Repair.
E. Include as part of this Adjustment Unit Price item, miscellaneous devices, accessory objects, and all necessary appurtenances required to complete installation.

2.09 SERVICE LATERAL REPAIR/REHABILITATION
LATERAL CONNECTION FULL WRAP CIPP LONG LINER
(ADJUSTMENT UNIT PRICE LINE ITEM 31)

A. The Adjustment Unit Cost for the Lateral Connection Full Wrap CIPP Long Liner is to be based on a lateral length of five (5) feet, measured horizontally, and shall be measured per unit (EA) installed.
B. All costs associated with the installation of the Full Wrap CIPP Long Liner including pre-rehabilitation CCTV inspection, post-rehabilitation CCTV inspection, any cleaning of the sewer/lateral required to install the lateral connection liner, locating and verifying the lateral and lateral size to be rehabilitated, surface restoration and traffic control are to be included in this adjustment unit price cost
C. Cleaning shall include light cleaning, as well as any heavy cleaning necessary to install the CIPP liner. Heavy cleaning with root cutters and mechanical chains are included in the cost of each item. Contractor shall submit supporting documentation, CCTV, and written explanation to Owner if lining cannot be completed.
D. Include as part of this Adjustment Unit Price item, miscellaneous devices, accessory objects, and all necessary appurtenances required to complete installation.

2.10 SERVICE LATERAL REPAIR/REHABILITATION
ADDITIONAL LINEAR FEET FULL WRAP CIPP LONG LINER
(ADJUSTMENT UNIT PRICE LINE ITEM 32)

A. The Adjustment Unit Price for the Additional Linear Feet Full Wrap CIPP Long Liner is to be based on the length of Full Wrap CIPP Long Liner installed beyond the first five (5) horizontal linear feet of Long Liner, and shall be measured per linear foot (LF) installed, as measured horizontally.
B. All costs associated with this item including pre-rehabilitation CCTV inspection, post-rehabilitation CCTV inspection, any cleaning of the sewer/lateral required to install the additional length of Long Liner, and installation of the additional length of Long Liner shall be included in this Adjusted Unit Price Line Item.
C. Include as part of this Adjustment Unit Price item, miscellaneous devices, accessory objects, and all necessary appurtenances required to complete installation.

2.11 MANHOLE REHABILITATION
REMOVE AND REPLACE MANHOLE (PAVED)
(ADJUSTMENT UNIT PRICE LINE ITEM 33)

A. Installation of a new sewer manhole will be measured and paid per unit (EA) installed. All costs associated with excavation, demolition of the existing manhole, measurements and surveys to size the manhole and locate the openings, installation the new sewer manhole, connections to existing sewers, plugging lift holes, bedding, backfill, and surface restoration including fencing, landscaping, street restoration, curb replacement, sidewalk replacement, driveway restoration, ADA ramps, and traffic control are to be included in the Adjustment Unit Price.
B. The cost for the frame and cover will be paid according to the appropriate Adjustment Unit Price Line Items 22-24.
C. Contractor shall replace a minimum of 5 feet of existing sewer entering/exiting the manhole. The cost of this pipe is included in the cost of this Adjustment Unit Price Item. The diameter and approximate depth of all manholes to be replaced are shown on the Construction Contract Documents. The manhole depths are from manhole inspection data and sewer records.
D. All manholes shall be constructed in accordance with SECTION 03370 – MANHOLE CONSTRUCTION.
E. Include as part of this Adjustment Unit Price item, miscellaneous devices, accessory objects, and all necessary appurtenances required to complete installation.

2.12 MANHOLE REHABILITATION
REPLACE FRAME AND COVER (PAVED AND UNPAVED) (ADJUSTMENT UNIT PRICE LINE ITEMS 34-36)

A. Frame and cover replacements shall be measured per unit (EA) installed. All costs associated with this item including the installation of the frame and cover, external frame seal, adjustment rings and raising the frame and cover to grade, and surface restoration are to be included in the adjustment unit price.
B. All costs associated with frame and cover replacement including surface restoration consisting of fencing, landscaping, street restoration, curb replacement, sidewalk replacement, driveway restoration, ADA ramps, and traffic control are to be included in the Adjustment Unit Price.
C. Include as part of these Adjustment Unit Price items, miscellaneous devices, accessory objects, and all necessary appurtenances required to complete installation.

2.13 MANHOLE REHABILITATION
REPLACE CONE
(ADJUSTMENT UNIT PRICE LINE ITEM 37)

A. Replace cone shall be measured per unit (EA) installed. All costs associated with this item including excavation, removal of the existing cone, installation of the new cone, backfill, and surface restoration are to be included in the adjustment unit price.
B. All costs including surface restoration consisting of fencing, landscaping, street restoration, curb replacement, sidewalk replacement, driveway restoration, ADA ramps, and traffic control are to be included in the Adjustment Unit Price.
C. The cost for the frame and cover will be paid according to Adjustment Unit Price Line Item 22-24.
D. Include as part of this Adjustment Unit Price item, miscellaneous devices, accessory objects, and all necessary appurtenances required to complete installation.

2.14 MANHOLE REHABILITATION
CEMENTITIOUS LINER
(ADJUSTMENT UNIT PRICE LINE ITEM 38-41)

A. Cementitious liner for sewer manhole rehabilitation will be measured to the tenth of a vertical foot (VF) of manhole lined, regardless of manhole diameter. All costs associated with the installation of the cementitious liner are to be included in the Adjustment Unit Price for the thickness required. The size and depth of the manholes are shown on the Construction Contract Documents. All testing shall be included in the Adjustment Unit Price.
B. Manholes receiving cementitious liner are identified in the Work Schedules on the Construction Contract Documents by the manhole distance from the nearest vehicular access, that is, the nearest clear, paved or unpaved roadway. The manhole distance is reported as a range. All manholes receiving cementitious liner fall within one of three different ranges: $X \leq 150$ feet, 150 feet $< X \leq 250$ feet, 250 feet $< X \leq 350$ feet, or $X > 350$ feet, where X = Manhole distance from the nearest vehicular access.

C. Include as part of these Adjustment Unit Price items, miscellaneous devices, accessory objects, and all necessary appurtenances required to complete installation.

2.15 MANHOLE REHABILITATION
REBUILD BENCH AND TROUGH
(ADJUSTMENT UNIT PRICE LINE ITEM 42)

A. Rebuilding the bench and trough will be measured per unit (EA) completed. All costs associated with this item are to be included in the Adjustment Unit Price.
B. Include as part of this Adjustment Unit Price item, miscellaneous devices, accessory objects, and all necessary appurtenances required to complete installation.

2.16 ALLOWANCE (BASE BID ADJUSTMENT UNIT PRICE LINE ITEM 43)

A. Any additional work requested by the Owner that is not specifically stated in the construction contract documents shall be paid by this item. Contractor's maximum upper limit for compensation includes a total allowance amount of $300,000.00 not yet authorized by Owner that may be required throughout the course of the work. This allowance amount shall not be utilized unless specifically authorized in writing by the Owner to perform additional work. Additional work shall not be performed, nor is the Contractor approved to utilize any of the allowance amount, unless the Owner provides written authorization to Contractor that includes the scope of work for work to be performed and a maximum billing limit for compensation that has been mutually agreed upon.

PART 3 – LUMP SUM ITEMS

3.01 MOBILIZATION
(ADJUSTMENT UNIT PRICES LINE ITEM 44)

A. Mobilization is a lump sum item and shall not exceed 3.5% of the calculated Adjustment Unit Price Extension Subtotal on Form 00412, Table A.
B. This item shall be paid with the first Application for Payment.

3.02 BONDS AND INSURANCE
(ADJUSTMENT UNIT PRICES LINE ITEM 45)

A. Bonds and insurance is a lump sum item and shall not exceed 1.5% of the Adjustment Unit Price Extension Subtotal on Form 00412, Table A.
B. This item shall be paid with the first Application for Payment.

3.03 FINAL COMPLETION, DEMOBILIZATION, RECORD DRAWINGS AND CLOSE-OUT
(ADJUSTMENT UNIT PRICES LINE ITEM 46)

A. Shall be a lump sum item. There is no limit on the maximum value of this lump sum item.
B. Regardless of the lump sum price, this item shall be included in the Schedule of Values at a minimum price amount shown on Form 00412, Table A.
C. This item shall be paid after submittal of Record Drawings and CITY approval of the Record Drawing submittal.

End of Section.

APPLICATION FOR PAYMENT

Project Number _____

Project Title _____

Final Payment[5] ☐

Application Number[2]: _____

CONTRACTOR

Date: _____

Ordinance/Resolution Number: _____

Address

Effective: _____

PO Number _____

Vendor Number _____

Application for Work Accomplished from _____ to _____

Original Contract Price		[1]				$	-
Net by Change Orders___through___					[2]	$	-
Current Contract Price (1+2)					[3]	$	-
Completed Work		[4]	$	-			
Disputed Amounts[3]	[-]	[4a]	$	-			
Stored Material[4]		[5]	$	-			
Disputed Amounts[3]	[-]	[5a]	$	-			
Total Completed and Stored to Date (4+5)					[6]	$	-
Previous Payments		[7]	$	-			
Previous Retainage		[8]	$	-			
Total Previous Applications (7+8)					[9]	$	-
Amount This Application (6-9)					[10]	$	-
Less Retainage This Application (5%)					[-] [11]	$	-
Release of Retainage					[12]	$	-
Total Due This Application (10-11+12)					[13]	$	-
Liquidated Damages							
Completion of Work		[14]	$	-	[-]	$	-
Prevailing Wage[7]		[15]	$	-	[-]	$	-
MBE/WBE Program[7]		[16]	$	-	[-]	$	-
Workforce Program[7]		[17]	$	-	[-]	$	-
Total Amount Due Contractor (13 - 14 through 17)					[18]	$	-

Accompanying Documentation: [1, 2, 3, 4, 5, & 6] and any other information as necessary.

NOTE: Initial all figures on this Application and on the Schedule of Values that are changed to correct errors or conform to the amount recommended. Attach explanation of changes that have been made.

CONTRACTOR's Certification:

The undersigned CONTRACTOR certifies that (a) all previous progress payments received from OWNER on account of Work done under this Contract have been applied on account to discharge CONTRACTOR's legitimate obligations incurred in connection with Work covered by all prior Applications for Payment; (b) at time of payment, title of all Work, materials and equipment incorporated into said Work or otherwise listed in or covered by this Application for Payment will pass to OWNER free and clear of all Liens, security interests and encumbrances (except such as are covered by a Bond acceptable to OWNER indemnifying OWNER against any such Lien, security interest or encumbrance); and (c) all Work covered by this Application for Payment is in accordance with the Contract Documents and not defective; and (d) all manufactured goods or commodities used or supplied for this Project are in compliance with Kansas City's Buy America ordinance.

_____ By _____ _____

Contractor | Authorized Representative (Print) | Signature

Date_____

State of)
)SS
County of)

Subscribed and Sworn to before me this _____ day of _____, _____ .

My commission expires:

_____ Notary Public: _____

DESIGN PROFESSIONAL's Recommendation of Payment:

In accordance with the Contract Documents, based on on-Site observations and the data comprising this application, the DESIGN PROFESSIONAL recommends to the OWNER that to the best of the DESIGN PROFESSIONAL's knowledge, information and belief the Work has progressed as indicated, the quality of the Work is in accordance with the Contract Documents, and the CONTRACTOR is entitled to payment of the Amount above listed in this application.

Name of firm (Print)	DESIGN PROFESSIONAL (Print)	(Signature)

Date: _____

Construction/Program Manager's Recommendation of Payment: (if applicable)

In accordance with the Contract Documents, based on on-Site observations and the data comprising this application, the Construction/Program Manager recommends to the OWNER that to the best of the Construction/Program Manager's knowledge, information and belief the Work has progressed as indicated, the quality of the Work is in accordance with the Contract Documents, and the CONTRACTOR is entitled to payment of the Amount above listed in this application.

Construction/Program Manager firm (Print)	Authorized Representative (Print)	(Signature)

Date: _____

City's Representative's Agreement with Recommendation of Payment

City's Representative(print)	(Signature)	(Date)

City's Approval

The amount previously recommended is approved for payment.

Director or Designee (Print)	(Signature)	(Date)

[1]See General Conditions Article 14.02 A and B
[2]Proof of tax compliance if 1st payment and if Contract amount exceeds $150,000.00
[3]Schedule of Values–Denote any amounts currently disputed in this application. Attach additional dispute documentation if required.
[4]If requesting payment for stored materials, see General Conditions Article 14.02 A.1
[5]If final payment, current proof of tax compliance if Contract is longer than 1 year and amount exceeds $150,000.00.
[6] Per General Conditions Sec. 14.02 attach a copy of the most recent 00485.01 M/WBE Monthly Utilization Report, 00485.02 Project Workforce Monthly Report and 00485.03 Company-Wide Workforce Monthly Report CONTRACTOR has submitted to the City's Human Relations Department
[7]Applicable only if final payment

REMINDER: CONTRACTOR is responsible for meeting or exceeding the the D/M/WBE participation amounts in its Contractor Utilization Plan (CUP) as amended by any previously approved Request for Modification/Substitution. Any Change Orders or amendements modifying the amount CONTRACTOR is to be compensated will have correspondingly impacted the amount of compensation due D/M/WBEs for purposes of meeting or exceeding the Bidder/Proposer participation. CONTRACTOR is again reminded to consider the effect of any Change Order or amendment, and to submit a Request for Modification/Substitution if appropriate.

Distribution: Owner, Contractor, Construction Manager, Project Manager, Design Professional

CITY OF FOUNTAINS
HEART OF THE NATION
KANSAS CITY
MISSOURI

SCHEDULE OF VALUES

Project Number _____

Project Title _____

HRD APPROVED CUP		
MBE	WBE	DBE
$0.00	$0.00	$0.00
%	%	%

A	B	C	D	E	F	G	H	I	J	K	L	M	N	O	P	Q	R	S
SPEC SECTION	UNIT PRICE CONTRACTS			DESCRIPTION OF WORK UNIT ITEM DESCRIPTION	$ UNIT PRICE	NO. OF UNITS	$ TOTAL OR LUMP SUM	UNITS COMPLETE	$ COMPLETED WORK	$ STORED MATERIAL	$ TOTAL COMPLETED AND STORED TO DATE		TOTALS TO DATE			% AT BOTTOM	$ TOTAL PREVIOUS APPLICATIONS	$ AMOUNT THIS APPLICATION L-R
	UNIT ITEM NO.	UNIT	ESTIMATED QUANTITY								$ J+K	% J/H	$ MBE	$ WBE	$ DBE			
																P/L		
																O/L		
																N/L		

City Of Kansas City, Missouri

Certified Payroll Report Instructions

GENERAL INSTRUCTIONS:

Each space on the attached Certified Payroll Report requiring information is numbered. The numbers below correspond to those spaces. When completing the Certified Payroll Report, insert the required information in each space. The Certified Payroll Report **must be complete, clear and legible** and be accompanied by a completed Payroll Certification including **original signature**. All payrolls are to be submitted within two (2) weeks after the ending date of the payroll week.

The payroll form is available on line.

INSTRUCTION FOR PAYROLL SHEETS

1. **PAYROLL NUMBER**: Insert the number of the payroll. Payrolls start with number 1 (one) for the first week of work by each contractor or subcontractor. The numbers are then continuous until the last payroll. During weeks when no work takes place a payroll for that week showing no work is to be turned in. Revised payrolls must be designated with a letter "R" following the number. Check (✓) the box by the word "FINAL" after the number to indicate that no further work will be done by the contractor or subcontractor.

2. **WEEK ENDING**: On each sheet, insert the date of the last day of this payroll.

3. **SHEET OF**: On each sheet, insert the number of each sheet and the total number of sheets submitted.

4. **GRANT AGENCY PROJECT NO:** Insert the Grant Agency Project Grant Number if this is a grant funded project.

5. **CONTRACTOR**: Insert the contractor's company name and address.

6. **SUBCONTRACTOR**: If this is a payroll for a subcontractor, insert subcontractor's name and address. For the remainder of these instructions, the word "contractor" shall apply to both contractor and subcontractor.

7. **DEPARTMENT PROJECT or CONTRACT NO**: Insert Department's Project or Contract Number.

8. **LOCATION**: Insert location of work, including address, and county.

9. **DESCRIPTION**: Insert name of the project or contract from the Agreement.

10. **FEDERAL I.D. NUMBER**: Insert the contractor (10a) and subcontractor's (10b) Federal I.D. Number.

11. **EMPLOYEE NAME**: Insert employee's full legal name and complete home address. Make sure to include Apartment #'s and zip code.

12. **SOCIAL SECURITY NO**.: Insert employee's social security number (xxx-xx-xxxx).

13. **DATE**: Insert date for each day of the payroll week for each employee (mm/dd/yyyy).

14. **REGULAR HOURS***: Insert the regular hours worked each day.

15. **OVERTIME HOURS***: Insert the overtime hours worked each day.

16. **DOUBLE OVERTIME HOURS*:** Insert the double overtime hours worked each day.

    ***Note:** Numbers 14, 15, and 16: Make sure these **hours are equal to or greater than the hours turned in on the "Daily Labor Force Report" form.** Refer to the wage order for applicable overtime schedule.

    If allowed by occupational title's applicable overtime rate, Contractor may make a permanent schedule transfer to an eight (8) or ten (10) hour day work week. **Advance written notification to and approval** from the Owner's Representative **is required**.

    If allowed by the occupational title's applicable overtime rate, any change in the work week schedule due to inclement weather **must** be documented on the certified payroll.

17. **TOTAL HOURS**: Insert total of *regular hours* worked for the week on this project. (The total hours will calculate automatically if you are using the electronic form.)

18. **TOTAL HOURS**: Insert total of *overtime hours* worked for the week on this project. (The total hours will calculate automatically if you are using the electronic form.)

19. **TOTAL HOURS:** Insert total of *double overtime* hours worked for the week on this project. (The total hours will calculate automatically if you are using the electronic form.)

20. **TOTAL FRINGE HOURS**: Insert total Fringe Hours (by adding the amounts in 17, 18, and 19). (The total hours will calculate automatically if you are using the electronic form.)

21. **BASE RATE***: Insert basic hourly rate of pay. Check the contract's "Annual Wage Order" or the "Federal General Wage Decision" section for basic hourly rate.

22. **OVERTIME RATE***: Insert overtime rate of pay. Check the contract's "Annual Wage Order" or the "Federal General Wage Decision" section for the overtime rate.

23. **DOUBLE OVERTIME RATE***: Insert double overtime rate of pay. Check the contract's "Annual Wage Order" or the "Federal General Wage Decision" section for the double overtime rate.

24. **FRINGE RATE***: Insert fringe benefit rate for this project. Check the contract's "Annual Wage Order" or the "Federal General Wage Decision" section for the fringe benefit rate.

    ***Note**: *The total of the basic hourly rate plus the fringe benefit rate must be equal to or greater than the total of the basic hourly rate plus the fringe benefit rate found in the contract's "Annual Wage Order" or the "Federal General Wage Decision" section. If the contract contains both of the above, the higher rate will prevail.*

25. **TOTAL**: Multiply the amounts in 17 by 21 and insert here. (The total hours will calculate automatically if you are using the electronic form.)

26. **TOTAL**: Multiply the amounts in 18 by 22 and insert here. (The total hours will calculate automatically if you are using the electronic form.)

27. **TOTAL**: Multiple the amounts in 19 by 23 and insert here. (The total hours will calculate automatically if you are using the electronic form.)

28. **TOTAL**: Multiply the amounts in 20 by 24 and insert here. (The total hours will calculate automatically if you are using the electronic form.)

29. Check (✓) the box (☐) for the "*APPROVED PLAN*", "*EMPLOYEE",* or both indicating the Plan or manner in which the fringe benefit is paid. If fringe benefit is paid to both a Plan and the employee, then insert each amount that is paid to the Plan and/or the employee. If paid to a Plan, list the name(s) of Plan Programs on Payroll Certification page.

    ***Note:** 29a plus 29b **must equal** 28**.**

30. **OCCUPATIONAL TITLE/CLASSIFICATION**: Insert occupational title/classification of worker for each employee. Examples: Carpenter, laborer, electrician.

31. **GROUP**: Insert the group if, applicable for the occupational title/classification. Example: Operating Engineers Group I, II, III, IV or V.

32. **SKILL GROUP**: Insert skill group, if applicable. Example: general laborer, skilled laborer, first semi-skilled, second semi-skilled etc. or any of the listings under the federal classification such as painters.

33. **HOURS**: Insert total hours worked for all jobs for each employee during each payroll period.

34. **GROSS EARNINGS**: Insert employee's gross earnings for each payroll period.

35. **FEDERAL**: Insert the amount of the deduction from each employee's check stub.

36. **FICA**: Insert the amount of the deduction from each employee's check stub.

37. **STATE**: Insert the amount of the deduction from each employee's check stub.

38. **LOCAL E-TAX**: Insert the amount of the deduction from each employee's check stub.

39. **MISCELLANEOUS**: Insert the amount of the deduction from each employee's check stub.

40. **NET PAY**: Insert the employee's net pay for each week.

41. **EARNINGS FOR THIS JOB**: Add the amounts in 25, 26, 27, and 29b and insert here.

    ***Note**: If fringe benefit is paid to Approved Plan, do not add the amount in 29a to this total.

42. **KANSAS CITY EARNINGS TAX THIS JOB**: Insert Kansas City Earnings tax deducted from employee's check for this job.

Steps 11 through 42 are to be repeated for each employee working on the project site, or for the same employee working any additional Occupational Title/Classification.

CITY OF FOUNTAINS
HEART OF THE NATION
KANSAS CITY
MISSOURI

CERTIFIED PAYROLL REPORT

Project Number:

Project Title:

Payroll Number: 1 ☐ **Final**

WEEK ENDING: 2	SHEET 3	of	GRANT AGENCY PROJECT NO.: 4		
CONTRACTOR: 5	SUBCONTRACTOR: 6		DEPT PROJECT OR CONTRACT NO.: 7		
ADDRESS:	ADDRESS:		LOCATION: 8		
CITY, STATE ZIP:	CITY, STATE ZIP:		DESCRIPTION: 9		
FEDERAL I.D. NUMBER: 10a	FEDERAL I.D. NUMBER: 10b				

EMPLOYEE NAME: 11 (First Name / Last Name)	DATE: 13	MON	TUES	WED	THUR	FRI	SAT	SUN	TOTAL HRS.	BASE RATE	O.T. RATE	FRINGE RATE	TOTAL
ADDRESS:	REG. HRS. 14								17 0.00	$ 21 -			$ 25 -
CITY, STATE ZIP:	O.T. HRS. 15								18 0.00		$ 22 -		$ 26
SOCIAL SECURITY NO.: 12	D.O.T. HRS. 16								19 0.00		$ 23 -		$ 27 -
OCCUPATIONAL TITLE / CLASSIFICATION:						TOTAL FRINGE HOURS			20 0.00			$ 24 -	$ 28
30											FRINGE PAID TO:	☐ APPROVED PLAN 29a	-
	GROUP: 31		SKILL GROUP: 32									☐ EMPLOYEE 29	$ 29b
WEEK ALL JOBS: HOURS:	GROSS EARNINGS:	FEDERAL:		FICA:		STATE:		LOCAL E-TAX:	MISC:	NET PAY:	EARNINGS FOR THIS JOB:		$ 41 -
33	$ 34 -	$ 35 -		$ 36 -		$ 37 -		$ 38 -	$ 39	$ 40 -	KANSAS CITY EARNINGS TAX THIS JOB		$ 42 -

EMPLOYEE NAME: (First Name / Last Name)	DATE:	MON	TUES	WED	THUR	FRI	SAT	SUN	TOTAL HRS.	BASE RATE	O.T. RATE	FRINGE RATE	TOTAL
ADDRESS:	REG. HRS.								0.00	$ -			$ -
CITY, STATE ZIP:	O.T. HRS.								0.00		$ -		$ -
SOCIAL SECURITY NO.:	D.O.T. HRS.								0.00		$ -		$ -
OCCUPATIONAL TITLE / CLASSIFICATION:						TOTAL FRINGE HOURS			0.00			$ -	$ -
											FRINGE PAID TO:	☐ APPROVED PLAN	$ -
	GROUP:		SKILL GROUP:									☐ EMPLOYEE	$ -
WEEK ALL JOBS: HOURS:	GROSS EARNINGS:	FEDERAL:		FICA:		STATE:		LOCAL E-TAX:	MISC:	NET PAY:	EARNINGS FOR THIS JOB:		$ -
	$ -	$ -		$ -		$ -		$ -	$ -	$ -	KANSAS CITY EARNINGS TAX THIS JOB		$ -

EMPLOYEE NAME: (First Name / Last Name)	DATE:	MON	TUES	WED	THUR	FRI	SAT	SUN	TOTAL HRS.	BASE RATE	O.T. RATE	FRINGE RATE	TOTAL
ADDRESS:	REG. HRS.								0.00	$ -			$ -
CITY, STATE ZIP:	O.T. HRS.								0.00		$ -		$ -
SOCIAL SECURITY NO.:	D.O.T. HRS.								0.00		$ -		$ -
OCCUPATIONAL TITLE / CLASSIFICATION:						TOTAL FRINGE HOURS			0.00			$ -	$ -
											FRINGE PAID TO:	☐ APPROVED PLAN	$ -
	GROUP:		SKILL GROUP:									☐ EMPLOYEE	$ -
WEEK ALL JOBS: HOURS:	GROSS EARNINGS:	FEDERAL:		FICA:		STATE:		LOCAL E-TAX:	MISC:	NET PAY:	EARNINGS FOR THIS JOB:		$ -
	$ -	$ -		$ -		$ -		$ -	$ -	$ -	KANSAS CITY EARNINGS TAX THIS JOB		$ -

EMPLOYEE NAME: (First Name / Last Name)	DATE:	MON	TUES	WED	THUR	FRI	SAT	SUN	TOTAL HRS.	BASE RATE	O.T. RATE	FRINGE RATE	TOTAL
ADDRESS:	REG. HRS.								0.00	$ -			$ -
CITY, STATE ZIP:	O.T. HRS.								0.00		$ -		$ -
SOCIAL SECURITY NO.:	D.O.T. HRS.								0.00		$ -		$ -
OCCUPATIONAL TITLE / CLASSIFICATION:						TOTAL FRINGE HOURS			0.00			$ -	$ -
											FRINGE PAID TO:	☐ APPROVED PLAN	$ -
	GROUP:		SKILL GROUP:									☐ EMPLOYEE	$ -
WEEK ALL JOBS: HOURS:	GROSS EARNINGS:	FEDERAL:		FICA:		STATE:		LOCAL E-TAX:	MISC:	NET PAY:	EARNINGS FOR THIS JOB:		$ -
	$ -	$ -		$ -		$ -		$ -	$ -	$ -	KANSAS CITY EARNINGS TAX THIS JOB		$ -

CITY OF FOUNTAINS
HEART OF THE NATION

KANSAS CITY
MISSOURI

CERTIFIED PAYROLL REPORT

Project Number: _____

Project Title: _____

Payroll Number: _____ **Final**

WEEK ENDING:		SHEET		of		GRANT AGENCY PROJECT NO.:	
CONTRACTOR:		SUBCONTRACTOR:				DEPT PROJECT OR CONTRACT NO.:	
ADDRESS:		ADDRESS:				LOCATION:	
CITY, STATE ZIP:		CITY, STATE ZIP:				DESCRIPTION:	
FEDERAL I.D. NUMBER:		FEDERAL I.D. NUMBER:					

	First Name	Last Name	DATE:												
EMPLOYEE NAME:				MON	TUES	WED	THUR	FRI	SAT	SUN	TOTAL HRS.	BASE RATE	O.T. RATE	FRINGE RATE	TOTAL
ADDRESS:			REG. HRS.								0.00	$ -			$ -
CITY, STATE ZIP:			O.T. HRS.								0.00		$ -		$ -
SOCIAL SECURITY NO.:			D.O.T. HRS.								0.00		$ -		$ -
OCCUPATIONAL TITLE / CLASSIFICATION:								TOTAL FRINGE HOURS			0.00			$ -	$ -
													FRINGE PAID TO:	APPROVED PLAN	$ -
			GROUP:		SKILL GROUP:									EMPLOYEE	$ -
WEEK ALL JOBS:	HOURS:	GROSS EARNINGS:	FEDERAL:		FICA:		STATE:		LOCAL E-TAX:		MISC:	NET PAY:	EARNINGS FOR THIS JOB:		$ -
		$ -	$ -		$ -		$ -		$ -		$ -	$ -	KANSAS CITY EARNINGS TAX THIS JOB		$ -

	First Name	Last Name	DATE:												
EMPLOYEE NAME:				MON	TUES	WED	THUR	FRI	SAT	SUN	TOTAL HRS.	BASE RATE	O.T. RATE	FRINGE RATE	TOTAL
ADDRESS:			REG. HRS.								0.00	$ -			$ -
CITY, STATE ZIP:			O.T. HRS.								0.00		$ -		$ -
SOCIAL SECURITY NO.:			D.O.T. HRS.								0.00		$ -		$ -
OCCUPATIONAL TITLE / CLASSIFICATION:								TOTAL FRINGE HOURS			0.00			$ -	$ -
													FRINGE PAID TO:	APPROVED PLAN	$ -
			GROUP:		SKILL GROUP:									EMPLOYEE	$ -
WEEK ALL JOBS:	HOURS:	GROSS EARNINGS:	FEDERAL:		FICA:		STATE:		LOCAL E-TAX:		MISC:	NET PAY:	EARNINGS FOR THIS JOB:		$ -
		$ -	$ -		$ -		$ -		$ -		$ -	$ -	KANSAS CITY EARNINGS TAX THIS JOB		$ -

	First Name	Last Name	DATE:												
EMPLOYEE NAME:				MON	TUES	WED	THUR	FRI	SAT	SUN	TOTAL HRS.	BASE RATE	O.T. RATE	FRINGE RATE	TOTAL
ADDRESS:			REG. HRS.								0.00	$ -			$ -
CITY, STATE ZIP:			O.T. HRS.								0.00		$ -		$ -
SOCIAL SECURITY NO.:			D.O.T. HRS.								0.00		$ -		$ -
OCCUPATIONAL TITLE / CLASSIFICATION:								TOTAL FRINGE HOURS			0.00			$ -	$ -
													FRINGE PAID TO:	APPROVED PLAN	$ -
			GROUP:		SKILL GROUP:									EMPLOYEE	$ -
WEEK ALL JOBS:	HOURS:	GROSS EARNINGS:	FEDERAL:		FICA:		STATE:		LOCAL E-TAX:		MISC:	NET PAY:	EARNINGS FOR THIS JOB:		$ -
		$ -	$ -		$ -		$ -		$ -		$ -	$ -	KANSAS CITY EARNINGS TAX THIS JOB		$ -

	First Name	Last Name	DATE:												
EMPLOYEE NAME:				MON	TUES	WED	THUR	FRI	SAT	SUN	TOTAL HRS.	BASE RATE	O.T. RATE	FRINGE RATE	TOTAL
ADDRESS:			REG. HRS.								0.00	$ -			$ -
CITY, STATE ZIP:			O.T. HRS.								0.00		$ -		$ -
SOCIAL SECURITY NO.:			D.O.T. HRS.								0.00		$ -		$ -
OCCUPATIONAL TITLE / CLASSIFICATION:								TOTAL FRINGE HOURS			0.00			$ -	$ -
													FRINGE PAID TO:	APPROVED PLAN	$ -
			GROUP:		SKILL GROUP:									EMPLOYEE	$ -
WEEK ALL JOBS:	HOURS:	GROSS EARNINGS:	FEDERAL:		FICA:		STATE:		LOCAL E-TAX:		MISC:	NET PAY:	EARNINGS FOR THIS JOB:		$ -
		$ -	$ -		$ -		$ -		$ -		$ -	$ -	KANSAS CITY EARNINGS TAX THIS JOB		$ -

Date _____

I, _____, _____
(Name of Signatory Party) (Title)
do hereby state:

(1) That I pay or supervise the payment of the persons employed by (Contractor or subcontractor)_____ on the (Building or work)_____: that during the payroll period commencing on the _____ day of _____, 20___, and ending the _____ day of _____, 20___, all said persons employed on said project have been paid the full weekly wages earned, that no rebates have been or will be made either directly or indirectly to or on behalf of said (Contractor or subcontractor) _____from the full weekly wages earned by any person and that no deductions have been made either directly or indirectly from the full wages earned by any person, other than permissible deductions as defined in Regulations, Part 3 (29 CFR Subtitle A), issued by the Secretary of Labor under the Copeland Act, as amended (48 Stat. 948.63 Stat. 108, 72 Stat. 967; 76 Stat. 357; 40 U.S.C. 276c), and described below:

_____
_____
_____
_____

(2) That any payrolls otherwise required under this contract to be submitted for the above period are correct and complete; that the wage rates for laborers or mechanics contained herein are not less than the applicable wage rates contained in any wage determination incorporated into this contract; that the classifications set forth herein for each laborer or mechanic conform to the work he performed.

(3) That any apprentices employed in the above period are duly registered in a bona fide apprenticeship program registered with a State apprenticeship agency recognized by the Bureau of Apprenticeship and Training, United States Department of Labor, or if no such recognized agency exists in a State, are registered with the Bureau of Apprenticeship and Training, United States Department of Labor.

(4) That:

(a) WHERE BENEFITS ARE PAID TO APPROVED PLANS, FUNDS, OR PROGRAMS

❑ In addition to the basic hourly wage rates paid to each laborer or mechanic listed in the above referenced payroll, consisting of _____ pages, payments of fringe benefits as listed in the contract have been or will be made to appropriate programs for the benefit of such employees, exceptions noted in 4 (c) below.

(b) WHERE BENEFITS ARE PAID IN CASH

❑ Each laborer or mechanic listed in the above referenced payroll, consisting of _____ pages, has been paid, as indicated on the payroll, in an amount not less than the sum of the basic hourly wage rate plus the amount of the required fringe benefits as listed in the contract, except as noted in Section 4 (c) below.

(c) EXCEPTIONS

EXCEPTION (CRAFT)	EXPLANATION
REMARKS	

NAME AND TITLE	SIGNATURE
The willful falsification of any of the above statements may subject the contractor or subcontractor to civil or criminal prosecution. See Section 1001 of Title 18 Section 231 of Title 31 of the United States Code.	

CITY OF FOUNTAINS
HEART OF THE NATION
KANSAS CITY
MISSOURI

SUBCONTRACTORS AND MAJOR MATERIAL SUPPLIERS LIST

Project Number _____ Project Title _____

From Contractor _____ To _____ Date _____

Spec. No.	Section Title		Firm, Address (Check box if Supplier)	Phone, FAX and e-mail	Contact

❑ Attachments:

Signed by: _____ Date _____

Distribution: ❑ Owner ❑ Contractor ❑ Construction Manager ❑ Design Professional ❑ Consultant ❑ Other

CITY OF FOUNTAINS
HEART OF THE NATION

KANSAS CITY
MISSOURI

DAILY LABOR FORCE REPORT

Project Number _____ Day _____ Date _____
Project Title _____
Contractor _____
Subcontractor _____

Weather: (Indicate if weather prevented work and why) _____
_____
_____

Shift: (circle) 5–8 hr Days 4–10 hr Days Other _____

* This report *MUST be completed and turned in* for EACH DAY until FINAL COMPLETION.

Worker's Full Legal Name	**Occupational Title or Classification Group & Skill**	**Hours Worked & Time (i.e. 10AM – 4PM)**	**Race & Gender**

I CERTIFY THAT ALL OF THE INFORMATION PROVIDED ABOVE IS TRUE AND COMPLETE.
Contractor/Subcontractor Representative:

Complete Name: (print) _____Title: (print) _____

Signature: _____ Page ____ of ____

Distribution: ❑ City Department ❑ Contractor ❑ Subcontractor ❑ Other

CERTIFICATE OF ACHIEVEMENT OF FULL OPERATION

Project/Contract Number _____

Project Title _____

CONTRACT FOR: _____

CONTRACTOR: _____

DATE OF ISSUANCE: _____

PROJECT OR DESIGNATED PORTION SHALL INCLUDE:
The Work performed under this Smart Sewer Program Contract has been reviewed and found, to the Design Professional's, Project Manager's, and Construction Manager's best knowledge, information, and belief, to have achieved a state of full operation. Achievement of full operation is the state where completion of construction and installation of equipment or infrastructure such that the equipment or infrastructure has been placed into full operation and is expected to both function and perform as designed. The date of Achievement of full operation of this Project is hereby established as _____. This is also the date the work can be utilized for the purposes for which it is intended and is ready for the City's continuous use. The correction period required by the Contract Documents shall commence on this date, except as stated below.

A list of items to be completed or corrected before final payment is attached hereto. The failure to include any items on such list does not alter the responsibility of the Contractor to complete all Work in accordance with the Contract Documents.

CONTRACTOR	BY	DATE
DESIGN PROFESSIONAL	BY	DATE

The Contractor will complete or correct the Work on the list of items attached hereto within _____ days from the above date of Achievement of Full Operation.

SMART SEWER PROJECT MANAGER	BY	DATE
SMART SEWER CONSTRUCTION MANAGER	BY	DATE
SMART SEWER DIVISON HEAD	BY	DATE
SMART SEWER OFFICER	BY	DATE

Distribution:
- ❑ Smart Sewer Officer
- ❑ Smart Sewer Division Head
- ❑ Contractor
- ❑ Construction Manager
- ❑ Design Professional
- ❑ Consultant _____
- ❑ Other _____

CITY OF FOUNTAINS
HEART OF THE NATION

KANSAS CITY
MISSOURI

PUNCH LIST

Project Number _____

Project Title _____

CONTRACTOR _____

From _____ Site Visit Date _____

The following items require the attention of the CONTRACTOR for completion or correction. This list may not be all-inclusive, and the failure to include any items on this list does not alter the responsibility of the CONTRACTOR to complete all Work in accordance with the Contract Documents.

Item No.	Location (Area)	Description	Correction/ Completion Date	Verification Check

❑ Attachments

Signed by: Date:

DESIGN PROFESSIONAL (Firm/In House)

Distribution:
- ❑ OWNER
- ❑ CONTRACTOR
- ❑ DESIGN PROFESSIONAL
- ❑ Consultant _____
- ❑ Other _____

CITY OF FOUNTAINS
HEART OF THE NATION

KANSAS CITY
MISSOURI

CONTRACTOR AFFIDAVIT FOR FINAL PAYMENT

Project Number _____

Project Title _____

STATE OF _____)
)SS
COUNTY OF _____)

The Undersigned, _____ of lawful
(Name)
age, being first duly sworn, states under oath as follows:

1. I am the _____ of _____who is the general
(Title) (CONTRACTOR)
CONTRACTOR for the CITY on Project No. _____ and Project Title _____.

2. All payrolls, material bills, use of equipment and other indebtedness connected with the Work for this Project have been paid and all Claims of whatever nature have been satisfied, as required by the Contract.

3 (✓) ____Prevailing wage does not apply; or

(✓) ____All provisions and requirements set forth in Chapter 290, Section 290.210 through and including 290.340, Missouri Revised Statutes, pertaining to the payment of wages to workmen employed on public works projects have been fully satisfied and there has been no exception to the full and complete compliance with these provisions and requirements and the Annual Wage Order contained in the Contract in carrying out the Contract and Work. CONTRACTOR has fully complied with the requirements of the prevailing wage law as required in the Contract and has attached affidavits from all Subcontractors on this Project, regardless of tier, affirming compliance with the prevailing wage law as stipulated in the Contract.

4. I hereby certify that (a) at project completion and pursuant to contractor's final request for payment, contractor achieved (_____%) Minority Business Enterprise (MBE) participation and (_____%) Women Business Enterprise (WBE) participation on this contract, and (b) listed herein are the names of all certified M/WBE subcontractors, regardless of tier, with whom I, or my subcontractors contracted.

1. Name of MBE/WBE Firm _____
Address _____
_____
Telephone Number (_____) _____
IRS Number _____
Area/Scope*of Work _____
Subcontract Final Amount _____

2. Name of MBE/WBE Firm _____
Address _____
_____
Telephone Number (_____) _____
IRS Number _____
Area/Scope*of Work_____
Subcontract Final Amount _____

List additional subcontractors, if any, on a similar form and attach to the bid.

Supplier** Final Amount: _____

*Reference to specification sections or bid item number.

(✓) ____ Met or exceeded the Contract utilization goals; or
(✓) ____ Failed to meet the Contract utilization goals (attach waiver, substitution or modification); or
(✓) ____ No goals applied to this Project.

5. CONTRACTOR certifies that each Subcontractor has received full payment for its respective work in connection with the Contract.

6. If applicable, I hereby certify that (a) at project completion and pursuant to contractor's final request for payment, contractor achieved, company-wide, at least ten percent (10%) minority workforce participation and two percent (2%) women workforce participation and (2) a true and accurate copy of my final project workforce monthly report (HRD Form 00485.02 and final company-wide workforce monthly report (HRD Form 00485.03) are attached. **NOTE: This paragraph is only applicable if you completed a construction contract that was estimated by the City, prior to solicitation, as requiring more than 800 construction labor hours and costing in excess of $324,000.01. If applicable you MUST attach copies of your final monthly workforce reports.**

7. This affidavit is made in behalf of the CONTRACTOR for the purpose of securing from Kansas City, Missouri, the certification of completion of the Project and receiving payment therefore.

8. If the Contract amount exceeded $150,000, CONTRACTOR has submitted proof of compliance with the City tax ordinances administered by the City's Commissioner of Revenue and has on file proof of tax compliance from all Subcontractors. If the Contract term exceeded one (1) year, CONTRACTOR has provided proof of compliance with the City tax ordinances administered by the City's Commissioner of Revenue prior to receiving final payment and has on file proof of tax compliance from all Subcontractors prior to the Subcontractor receiving final payment from CONTRACTOR.

CONTRACTOR_____

By _____
(Authorized Signature)

Title _____

On this _____ day of _____, _____, before me

appeared _____, to me personally known to be the

_____of the_____,

and who executed the foregoing instrument and acknowledged that (s)he executed the same on behalf of

_____ as its free act and deed.

IN WITNESS WHEREOF, I have hereunto set my hand and affixed my official seal on the day and year first above written.

My commission expires:

_____ _____
Notary Public

CITY OF FOUNTAINS
HEART OF THE NATION
KANSAS CITY
MISSOURI

SUBCONTRACTOR AFFIDAVIT FOR FINAL PAYMENT

Project Number _____

Project Title _____

STATE OF MISSOURI)
) ss:
COUNTY OF _____)

After being duly sworn the person whose name and signature appears below hereby states under penalty of perjury that:

1. I am the duly authorized officer of the business indicated below (hereinafter Subcontractor) and I make this affidavit on behalf of Subcontractor in accordance with the requirements set forth in Section 290.290, RSMo. Subcontractor has completed all of the Work required under the terms and conditions of a subcontract as follows:

Subcontract with: _____, Contractor

Work Performed: _____

Total Dollar Amount of Subcontract and all Change Orders: $_____

City Certified ☐MBE ☐ WBE ☐ DBE ☐ NA
List certifications: _____

2. Subcontractor fully complied with the provisions and requirements of the Missouri Prevailing Wage Law set forth in Sections 290.210, RSMo through 290.340, RSMo.

Business Entity Type:
(___) Missouri Corporation
(___) Foreign Corporation
(___) Fictitious Name Corporation
(___) Sole Proprietor
(___) Limited Liability Company
(___) Partnership
(___) Joint Venture
(___) Other (Specify)

Subcontractor's Legal Name and Address

_____

_____

Phone No. _____
Fax: _____
E:mail:_____
Federal ID No._____

I hereby certify that I have the authority to execute this affidavit on behalf of Subcontractor.

By: _____ _____
(Signature) (Print Name)

_____ _____
(Title) (Date)

NOTARY

Subscribed and sworn to before me this _____ day of _____, 20_____.

My Commission Expires:_____ By_____

_____ _____
Print Name Title

SECTION 01300 – SUBMITTALS

PART 1 - GENERAL

1.01 SUMMARY

A. This section provides for the submittals required by the City prior to the start of work and, as required, for the duration of the Work.

B. All submittals shall be clearly identified by reference to a specification section and/or detail drawing. Submittals shall be clear and legible and shall include sufficient presentation of the data.

C. No portion of the work requiring a shop drawing, product data or sample shall be started nor shall any materials be fabricated or installed prior to the completion of the submittal process described herein. Fabrication performed, materials purchased or on-site construction accomplished prior to completing the submittal process as defined herein shall be at the Contractor's sole risk. The City shall not be liable for any expense or delay to complete the submittal process.

1.02 RELATED SECTIONS

A. Section 00700 – General Requirements:
   1. Article 2, paragraph 2.07.B.1 – Preliminary Project Schedule.
   2. Article 2, paragraph 2.07.B.2 – Preliminary Schedule of Shop Drawings.
   3. Article 2, paragraph 2.07.B.3 – Preliminary Schedule of Values.
   4. Article 6, paragraph 6.04 – Progress Schedule.
   5. Article 6, paragraph 6.05 – Recovery Schedule.
   6. Article 6, paragraph 6.06 – Substitute and "Or-Equal" Items.
   7. Article 6, paragraph 6.15 – Safety Representative.
   8. Article 6, paragraph 6.18 – Shop Drawings and Samples.

B. Section 01015 – Specific Project Requirements.

C. Section 01335 – Document Management.

1.03 GENERAL INFORMATION

A. Definitions:
   1. Shop Drawings, product data and Samples are technical Submittals prepared by the Contractor, Subcontractor, manufacturer or Supplier and submitted by Contractor to the City/Design Professional for review and comment as a basis of the use of Equipment and Materials proposed for incorporation in the Work or needed to describe installation, operation, maintenance or technical properties, as specified in each Division of the Specifications:
      (a) Shop Drawings include custom-prepared data of all types including drawings, diagrams, performance curves, material schedules, templates, instructions and similar information.
      (b) Product data includes standard printed information on materials, products and systems; not custom-prepared for this Project, other than the designation of selections from available choices.
      (c) Samples include both fabricated and physical examples of materials, products and Work; both as complete units and as smaller portions of units of Work; either for limited visual inspection or (where indicated) for more detailed testing and analysis. Mock-ups are a special form of Samples which are too large to be handled in the specified manner for transmittal of Sample Submittals.

2. Informational Submittals are those technical reports, administrative Submittals, certificates and guarantees not defined as Shop Drawings, product data or Samples:
   (a) Technical reports include laboratory reports, tests, technical procedures, technical records and Contractor's design analysis.
   (b) Administrative Submittals are those nontechnical Submittals required by the Contract Documents or deemed necessary for administrative records. These Submittals include maintenance agreements, bonds, project photographs, physical work records, statements of applicability, copies of industry standards, project record data, schedules, security/protection/safety data and similar type Submittals.
   (c) Certificates and guarantees are those Submittals on Equipment and Materials where a written certificate or guarantee from the manufacturer or Supplier is required in the Contract Documents.

B. Quality Requirements:
   1. The Contractor shall submit Shop Drawings and Samples in accordance with Section 00700, paragraph 6.18.C Submittal Procedures.
   2. Submittals such as Shop Drawings and product data shall be of suitable quality for legibility and reproduction purposes. Every line, character and letter shall be clearly legible. Drawings shall be useable for further reproduction to yield legible hard copies.
   3. Documents submitted to the City/Design Professional that do not meet “NO EXCEPTIONS NOTED” to the specified requirements shall be subject to rejection by the City/Design Professional and upon request by the City/Design Professional, the Contractor shall resubmit documents. Submittals shall be corrected, retraced, redrawn or replaced, as may be necessary, to meet the “NO EXCEPTIONS NOTED” requirements. Contractor's failure to initially satisfy Submittal requirements will not relieve the Contractor from meeting the required schedule for Submittals.
   4. All submittals by subcontractors shall be sent directly to the Contractor for checking. The Contractor shall be responsible for their submission at the proper time to prevent delays.
   5. The Contractor shall check all subcontractors’ submittals regarding measurements, sizes, materials and details to determine and verify that they meet the requirements of the Contract Documents. Submittals found to be inaccurate or otherwise in error shall be returned to the subcontractors for correction before submission thereof.
   6. Certificates of Compliance – Where indicated in these specifications, each submittal shall include a certificate of compliance prepared by the manufacturer or Supplier of the submitted data, certifying that the item covered complies with Contract Documents. The certificate of compliance shall be a separate document and shall include identification of all deviations, if any, from the Contract Documents.

C. Submittal Completeness:
   1. The Contractor shall accept full responsibility for the completeness of each submission. When an item consists of components from several sources, the Contractor’s initial submittal on the item shall include all components.
   2. Submittals shall be complete with respect to dimensions, design criteria, materials of construction and other information specified to enable the City/Design Professional to review the information effectively.
   3. Where standard drawings are furnished which cover several variations of the general class of Equipment, each drawing shall be annotated to indicate exactly which parts of the drawing apply to the Equipment being furnished. Use hatch marks to indicate variations that do not apply to the Submittal. The use of "highlighting markers" will not be an acceptable means of annotating Submittals. Annotation shall also include proper identification of the Submittal permanently attached to the drawing.

4. Reproductions or copies of Contract Drawings or portions thereof will not be accepted as complete fabrication or erection drawings. The Contractor may use a reproduction of Contract Drawings for erection drawings to indicate information on erection or to identify detail drawing references. Whenever the Drawings are revised to show this additional Contractor information, the Design Professional's title block shall be replaced with Contractor's title block and the Design Professional's professional seal shall be removed from the drawing. The Contractor shall revise these erection drawings, as needed, for subsequent Design Professional revisions to the Contract Drawings.

D. Form of Submittals:
   1. Submittals and other Project documents shall be transmitted in electronic format and non-electronic format as specified.
   2. Electronic Format:
      (a) Transmit Submittals and Project documents utilizing:
         (i) Adobe ".pdf" files created directly from native electronic format or City-approved equal file type and format.
         (ii) Electronic submittal ".pdf" files are not to be combined files or collections of files/drawings. Each drawing document must stand alone.
         (iii) Each file will be right reading and oriented the same for all consecutive resubmissions.
         (iv) For any given Submittal, the filename and format shall be consistent for initial submission and subsequent revisions of the same. Use consistent naming convention throughout. Reference to revision or dates shall not be included in a filename.
         (v) Submittals not meeting the above criteria are subject to rejection.
      (b) Provide Project Record Documents, equipment instruction books and operating and maintenance manuals and any other documents, as required, in a file type and format approved by City.
   3. Non-electronic Format:
      (a) Selected Submittals may be provided in paper (hard copy), as well, only with advance approval of the City and using procedures specified herein.
      (b) Equipment instruction books and operating manuals shall be provided in hardcopies in addition to the specified electronic format.
      (c) See also Section 01015 – Specific Project Requirements for a list of Submittals that are to be submitted in hard copy format.

E. Transmittal of Submittals:
   1. All submittals, regardless of origin, shall be stamped with the approval of the Contractor and identified with the name and number of this Contract, Contractor's name, references to applicable specification paragraphs and Contract Drawings and version of the submittal. Each submittal shall indicate the intended use of the item in the Work. When catalog pages are submitted, applicable items shall be clearly identified and inapplicable data crossed out. The current revision, issue number and date shall be indicated on all drawings and other descriptive data. The Contractor's stamp of approval is a representation to the City and Design Professional that the Contractor accepts full responsibility for determining and verifying all quantities, dimensions, field construction criteria, materials, catalog numbers and similar data, and the Contractor has reviewed and coordinated each submittal with the requirements of the Work and the Contract Documents.

2. Electronic Submittals – The Contractor shall utilize the City's document management system as specified in Section 01335- Document Management for managing, tracking and storing documents associated with the Project. If an internet-based document management system is to be used, additional requirements are provided in Section 01335- Document Management and Section 01015 – Specific Project Requirements. The Contractor shall comply with the file protocols and procedures for the document management system.
3. Non-electronic Submittals – Paper (hard copy) submittals shall be delivered in accordance with Section 01015 – Specific Project Requirements and as specified herein.

F. Submittals Required for the Preconstruction Conference:
1. Following are the minimum required submittals to be provided by the Contractor at the pre-construction conference:
(a) General Requirements:
(i) Preliminary Project Schedule.
(ii) Preliminary Schedule of Shop Drawings.
(iii) Preliminary Schedule of Values.
(iv) Listing of Subcontractors.
(v) Project Sign Request.
(vi) Project letters to be used during the Work.
(vii) Safety Representative.
(b) Project Specific Requirements can be found in Section 01015 – Specific Project Requirements.
(c) Document Management can be found in Section 01335 – Document Management.

1.04 SHOP DRAWINGS AND SAMPLES

A. Shop Drawings:
1. Shop Drawings and engineering data covering all equipment and fabricated and building materials which will become a permanent part of the Work under this Contract shall be submitted to the City/Design Professional for review as specified herein. The data shall include drawings, descriptive information, sufficient detail to show the kind, size, arrangement and operation of component materials and devices; the external connections, anchorages and supports required; performance characteristics; and dimensions needed for installation and correlation with other materials and equipment.
2. All deviations from the Contract Documents shall be identified on each submittal and shall be tabulated in the Contractor's letter of transmittal. Such submittals shall, as pertinent to the deviation, indicate essential details of all changes proposed by the Contractor (including modifications to other facilities that may be a result of the deviation) and all required piping and wiring diagrams.

B. Product Data:
1. Product data as specified in individual Sections, include, but are not necessarily limited to, standard prepared data for manufactured products (sometimes referred to as catalog data), such as the manufacturer's product specification and installation instructions, availability of colors and patterns, manufacturer's printed statements of compliances and applicability, roughing-in diagrams and templates, catalog cuts, product photographs, standard wiring diagrams, printed performance curves and operational-range diagrams, production or quality control inspection and test reports and certifications, mill reports, product operating and maintenance instructions and recommended spare-parts listing and printed product warranties, as applicable to the Work.

2. If applicable, submittals for equipment shall include a listing of all installations where identical or similar equipment has been installed and been in operations for a period of at least one year.
3. Certificates are statements printed on the manufacturer's or supplier's letterhead and signed by responsible officials of manufacturer of product, system or material. Certifications shall provide a clear statement that the product, system or material meets the specified requirements of Contract Documents. All certificates shall be dated after the Effective Date of the contract and shall clearly indicate the project name and project number.

C. Samples:
1. Samples specified in individual Sections, include, but are not necessarily limited to, physical examples of the work such as sections of manufactured or fabricated work, small cuts or containers of materials, complete units of repetitively-used products, color/texture/pattern swatches and range sets, specimens for coordination of visual effect, graphic symbols and units of work to be used by the City/Design Professional for independent inspection and testing, as applicable to the Work.

D. Instruction Books and Operating and Manuals:
1. Contractor shall submit all Operation and Maintenance Data and Manuals as required by the Operation and Maintenance Data Specification in electronic and non-electronic form.
2. The Requirements of this specification also applies to the submittal and review of the Operation and Maintenance Data and Manuals.
3. In addition to electronic Submittals specified, non-electronic (hard copy) Equipment instruction books and operating manuals prepared by the manufacturer shall include the following:
   (a) Index and tabs.
   (b) Instructions for installation, start-up, operation, inspection, maintenance, parts lists and recommended spare parts and data sheets showing model numbers.
   (c) Applicable drawings.
   (d) Warranties and guarantees.
   (e) Address of nearest manufacturer-authorized service facility.
   (f) All additional data specified.
4. Information listed above shall be bound into hard-back binders of three-ring type. Sheet size shall be 8-1/2 x 11. Binder color shall be black. Capacity shall be a minimum of 1-1/2 inches, but sufficient to contain and use sheets with ease. Provide the following accessories:
   (a) Label holder.
   (b) Business card holder.
   (c) Sheet lifters.
   (d) Horizontal pockets.
5. The following information shall be imprinted, inserted or affixed by label on the binder front cover:
   (a) City's Name and Department name.
   (b) City's facility or plant name.
   (c) Equipment item name.
   (d) Volume number (if applicable).
   (e) Contract number.
   (f) Manufacturer's name and address.
6. The following information shall be imprinted, inserted or affixed by label on the binder spine:
   (a) Equipment item name.

(b) City's Name and Department.
(c) City's facility or plant name.
(d) Manufacturer's name.
(e) Contract number.
(f) Volume number (if applicable).

7. Submit mockup of cover and spine for the City/Design Professional's review.

E. Survey Data:
1. All field books, notes, videotapes and other data developed by Contractor in performing surveys required as part of the Work shall be available to City/Design Professional for examination throughout the construction period.
2. All such data shall be submitted to the City/Design Professional with the other documentation required for final acceptance of the Work.

1.05 CITY/DESIGN PROFESSIONAL'S REVIEW OF DRAWINGS AND DATA

A. The City/Design Professional's review of drawings and data submitted by Contractor will cover only general compliance with the Construction Contract Documents. The City/Design Professional's review does not indicate a thorough review of all dimensions, quantities and details of the material, equipment, device or item shown. The City/Design Professional's review shall not relieve Contractor of Contractor's responsibility for errors, omissions or deviations in the drawings and data, nor of sole responsibility for compliance with the Construction Contract Documents.

B. The City/Design Professional's submittal review period shall be 21 consecutive calendar days in length and shall commence on the first calendar day immediately following the date of arrival of the submittal or resubmittal in the City/Design Professional's office. The time required to mail the submittal or resubmittal back to Contractor shall not be considered a part of the submittal review period. Submittals shall be returned to the Contractor under one of the following assignments:
1. "NO EXCEPTIONS NOTED" is assigned when there are no notations or comments on the submittal. When returned, the Contractor may release the equipment and/or material for manufacture.
2. "EXCEPTIONS NOTED" is assigned when a confirmation of the notations and comments is not required by the Contractor. The Contractor may release the equipment or material for manufacture; however, all notations and comments must be incorporated into the final product.
3. "RETURNED FOR CORRECTION" is assigned when the submittal does not meet the intent of the Construction Contract Documents. The Contractor must resubmit the document revised to bring the submittal into compliance with Contract Documents. "RETURNED FOR CORRECTION" is also assigned when notations and comments are extensive enough to require a resubmittal of the package.
4. "NOT ACCEPTABLE" is assigned when the submittal does not meet the intent of the Construction Contract Documents. The Contractor must resubmit the entire package revised to bring the submittal into compliance with Contract Documents. It may be necessary to resubmit using a different manufacturer/vendor to meet the Construction Contract Documents. "NOT ACCEPTABLE" is also assigned when the notations and comments are extensive enough to require a resubmittal of the package.

C. If the Contractor considers any correction indicated on the shop drawings to constitute a change to the Contract Documents, the Contractor shall give written notice thereof to the City/Design Professional at least seven working days prior to release for manufacture.

D. Resubmittal of Drawings and Data:
   1. The Contractor shall accept full responsibility for the completeness of each resubmittal. The Contractor shall verify that all corrected data and additional information previously requested by the City/Design Professional are provided on the resubmittal. When corrected copies are resubmitted, the Contractor shall in writing direct specific attention to all revisions and shall list separately any revisions made other than those called for by the City/Design Professional on previous submissions.
   2. Requirements specified for initial submittals shall also apply to resubmittals. Resubmittals shall bear the number of the first submittal followed by a letter (A, B, etc.) to indicate the sequence of the resubmittal.
   3. Resubmittals shall be made within thirty (30) days of the date of the letter returning the submittal to be modified or corrected; unless, within 14 days, the Contractor submits an acceptable request for an extension of the stipulated period, listing the reasons the resubmittal cannot be completed within the specified time.
   4. Any need for more than one resubmission or any other delay in obtaining the City/Design Professional's review of submittals, will not entitle the Contractor to an extension of the Contract Times, unless: the delay of the Work is directly caused by a change in the Work authorized by a Change Order or by failure of the City/Design Professional to review the submittals within the submittal review period specified herein.

PART 2 - PRODUCTS

Not used.

PART 3 - EXECUTION

Not used

END OF SECTION

SECTION 01320 – CONSTRUCTION PROGRESS DOCUMENTATION

PART 1 - GENERAL

1.01 SUMMARY

A. This Section includes administrative and procedural requirements for documenting the construction process beginning with the Notice of Intent to Contract and continuing through completion of the Work performed and Construction Contract close out.

B. The Contractor shall furnish all labor, materials, equipment and incidentals as necessary to comply with these requirements including but not limited to the following and as required herein:
   1. Preliminary Project Schedule.
   2. Project Baseline Schedule.
   3. Progress Schedule.
   4. Recovery Schedules.
   5. Submittals Schedule.
   6. Daily Labor Force reports.
   7. Material location reports.
   8. Field condition reports.
   9. Special reports.
   10. Photographic Documentation.

1.02 SPECIFICATION MODIFICATIONS

A. It is understood this specification may be modified by appropriate items in Section 01015 – Specific Project Requirements.

1.03 RELATED SECTIONS

A. Drawings and general provisions of the Contract; including General and Supplementary Conditions, all applicable Division 01 Sections, and all applicable Division Sections; apply to this Section.

B. Section 00700 – General Requirements:
   1. Article 2, paragraph 2.07.B.1 – Preliminary Project Schedule.
   2. Article 2, paragraph 2.07.B.2 – Preliminary Schedule of Shop Drawings.
   3. Article 2, paragraph 2.08.A – Acceptable Schedule.
   4. Article 2, paragraph 2.08.B – Project Baseline Schedule.
   5. Article 6, paragraph 6.04 – Progress Schedule.
   6. Article 6, paragraph 6.05 – Recovery Schedule.

C. Section 01000 – General Project Requirements.

D. Section 01015 – Specific Project Requirements.

E. Section 01322 – Photographic Documentation.

1.04 CODES AND STANDARDS

A. The publications listed below form a part of this specification to the extent referenced. The publications are referred to within the text by the basic designation only.

B. American Association of Cost Engineers (AACE):
   1. Comply with recommended practices.

1.05 SUBMITTALS

A. Scheduler Qualifications – For firms and persons preparing schedules, submit qualifications as required by Table 1 to demonstrate their capabilities and experience. Include lists of completed projects with the following information:
   1. Project name.
   2. Project location.
   3. Name and address of engineer, architect or contractor for which schedules were prepared.
   4. Name and address of client.
   5. Other information and pertinent.

B. Preliminary Schedule of Shop Drawings – Arrange the following information in a tabular format:
   1. Scheduled date for each first submittal.
   2. Specification Section number and title.
   3. Submittal category (action or informational).
   4. Name of subcontractor.
   5. Description of the Work covered.
   6. Scheduled date for City's final approval.

C. Standard Schedule Format – Layout for all schedules and reports shall follow the standard format in the following order, activity ID, activity name, original duration, remaining duration, percent complete, start, finish, late start, late finish, total float, baseline variance, predecessor, successor, and resource ID.

D. Preliminary Project Schedule – Submit in native electronic format and *PDF format. PDF sheet size shall sufficiently large enough to legibly show entire schedule for entire construction period.

E. Baseline Project Schedule – Submit in native electronic format and *PDF format. PDF sheet size shall sufficiently large enough to legibly show entire schedule for entire construction period.

F. Progress Schedules – Submit in native electronic format and *PDF format. PDF sheet size shall sufficiently large enough to legibly show entire schedule for entire construction period.

G. CPM Reports – Submit concurrent with Preliminary, Baseline, and Progress Schedules.

H. Activity Report – Submit concurrent with each Progress Schedule a list of all activities sorted by activity number and early start date, or actual start date, if known.

I. Logic Report – Submit concurrent with each Progress Schedule a list of preceding and succeeding activities for all activities, sorted in ascending order by activity number and then early start date, or actual start date if known.

J. Total Float Report – Submit concurrent with each Progress Schedule a list of all activities sorted in ascending order of total float.

K. Daily Labor Force Reports – Submit concurrent with each Progress Schedule.

L. Material Location Reports – Submit concurrent with each Progress Schedule.

M. Field Conditions Reports – Submit concurrent with each Progress Schedule.

N. Special Reports – Submit special reports within one day of an occurrence.

O. Daily Construction Reports – Submit at weekly intervals.

1.06 DEFINITIONS

A. Activity:
   1. A discrete part of a project that can be identified for planning, scheduling, monitoring, and controlling the construction project. Activities included in a construction schedule consume time and resources.
   2. Critical activities are activities on the critical path. They must start and finish on the planned start and finish times.
   3. Predecessor activity is an activity that must start or complete before a given activity can be started. No negative lag is allowed.
   4. Successor activity is an activity that can not start until the predecessor activity allows it. No negative lag is allowed.

B. CPM (Critical Path Method) – A schedule network analysis technique used to determine the amount of scheduling flexibility (the amount of float) on various logical network paths in the project schedule network, and to determine the minimum total project duration. Start and finish dates are calculated by means of a forward pass, using a specified start date. Late start and finish dates are calculated by means of a backward pass, starting from a specified completion date, which sometimes is the project early finish date determined during the forward pass.

C. Critical Path – Generally, but not always, the sequence of schedule activities determining the duration of the project. Generally, it is the longest path through the project. However, a critical path can end, as an example, on a schedule milestone that is in the middle of the schedule model and that has a finish-on-or-before imposed date schedule constraint.

D. Event – The starting or ending point of an activity.

E. Float – The measure of leeway in starting and completing an activity. Float time is not for the exclusive use or benefit of either City or Contractor, but is a jointly owned, expiring Project resource available to both parties as needed to meet schedule milestones and Contract completion date. Free float is the amount of time an activity can be delayed without adversely affecting the early start of the following activity. Total float is the measure of leeway in starting or completing an activity without adversely affecting the planned Project completion date.

F. Fragnet – A partial or fragmentary network that breaks down activities into smaller activities for greater detail.

G. Gantt Chart – A graphic display of schedule-related information. In the typical Gantt chart, schedule activities or work breakdown structure components are listed down the left side of the chart, dates are shown across the top and activity durations are shown as date-placed horizontal bars. Also known as a Bar chart.

H. Lag – An offset or delay from an activity to its successor. It is based on the calendar of the successor activity.

I. Major Area – A significant construction element.

J. Major Procurement – As discussed in Section 00700, paragraph 2.07.B.1, Major Procurement shall further defined as any materials that fall within the critical path and/or have a lead time of 30 days or greater.

K. Milestone – A key or critical point in time for reference or measurement.

L. Network Diagram – A graphic diagram of a network schedule, showing activities and activity relationships.

M. Schedule Level – A project team specified rule for the relative granularity of schedule activities in an overall schedule model. Following are the descriptions and levels of detail for each schedule level:

1. Level 1 - Project Summary Schedule – This is a summary level schedule that highlights major project activities, milestones and key deliverables.
2. Level 2 - Project Phase Summary Schedule – This is a more extensive summary level schedule that includes all information from the Level 1 schedule and breaks down the project into major components by area or phase.
3. Level 3 - Detail Schedule – This level will show detail plans to accomplish. Procurement, Construction, Testing and Start-up. Such schedules will have logical relationships integrated between the activities and organized in such a manner to create a Critical Path and facilitate critical path analysis. It will include all milestones and major elements and will be used to support monthly progress reporting.
4. Level 4 - Detailed Schedule by Work Package – This level will include detailed information by each work package and display all activities to be accomplished by the workforce with durations of 7 or more calendar days.
5. Level 5 - Detailed Schedule by Task – This level of detail will support the short-term planning for the field, normally for those activities of less than 1-week duration. It is used for workforce supervisors to plan and coordinate work at the detail level.

N. WBS (Work Breakdown Structure) – A deliverable-oriented hierarchical decomposition of the work to be executed by the project team to accomplish the project objectives and create the required deliverables. It organizes and defines the total scope of the project. Each descending level represents an increasingly detailed definition of the project work. The WBS is decomposed into work packages. The deliverable orientation of the hierarchy includes both internal and external deliverables. See also Schedule Levels.

O. Work Package – A deliverable or project work component at the lowest level of each branch of the WBS. The work package includes the schedule activities and schedule milestones required to complete the work package deliverable or project work component.

P. Schedule of Monthly Payments – Estimated monthly progress payments based on Baseline Schedule and Schedule of Values for each Month for the duration of the project.

1.07 COORDINATION

A. Coordinate preparation and processing of schedules and reports with performance of construction activities including the scheduling and reporting of separate Contractors performing construction activities related to project.

B. Coordinate Progress Schedules with the Schedule of Values, to estimate a Schedule of Monthly Payments, list of subcontractors, Preliminary Schedule of Shop Drawings and Samples, progress reports, Application for Payment, and other required schedules and reports.

C. Secure time commitments for performing critical elements of the Work from parties involved. Time commitments should be captured within the schedule.

1.08 SCHEDULE LEVEL

A. The Schedule Level (see paragraph 1.06M) to be used for this project shall be as specified in Section 01015 – Specific Project Requirements.

B. If a Recovery Schedule is deemed necessary by the City in accordance with Section 00700 – General Conditions, it shall be developed as a Schedule Level 5 regardless of the requirements listed in Section 01015 – Specific Project Requirements.

1.09 SCHEDULING SOFTWARE

A. Prepare schedules using the latest version of Primavera version P6 or higher or Microsoft Project. See Section 01015 – Specific Project for additional or specific software requirements.

1.10 PRELIMINARY SCHEDULE OF SHOP DRAWINGS AND SAMPLES

A. Preparation – Provide a schedule of submittals arranged in chronological order by date required by the construction schedule. Include time required for review, resubmittal, ordering, manufacturing, fabrication, and delivery as set forth in the Contract Documents, when establishing dates.

B. Coordinate Submittals Schedule with list of subcontracts, the Schedule of Values, the estimated Schedule of Monthly Payments, and Progress Schedules.

C. Include Shop Drawing and Sample Submittals required during the first 60 days of construction. List those required to maintain orderly progress of the Work and those required early because of long lead time for manufacture or fabrication.

D. At Contractor's option, show submittals on the Preliminary Progress Schedule, instead of tabulating them separately.

1.11 SCHEDULE REQUIREMENTS

A. Requirements According to Schedule Level – Contractor shall provide the following information based in the Schedule Level defined in Section 01015 – Specific Project Requirements. An "X" indicates that the requirement is applicable to the Schedule Level.

Table 1. Schedule Requirements

Item	Requirement	Schedule Level				
		1	2	3	4	5
Procedures	Comply with procedures contained the American Association of Cost Engineers (AACE) recommended practices.	X	X	X	X	X
Time Frame	Extend project schedule from date established for the Notice to Proceed to the date of Final Completion.	X	X	X	X	X
Contract Times	Contract Times shall not be changed unless specifically authorized by Change Order.	X	X	X	X	X
Activities	Treat separate major areas as a separate numbered activity for each principal element of the Work. (WBS)	X	X	X	X	X
Activity Duration	Define activities so none is longer than 20 days, unless specifically allowed by City	X	X	X	X	X
Milestones	Include milestones indicated in the Contract Documents in schedule, including, but not limited to, the Notice to Proceed, Substantial Completion, and Final Completion.	X	X	X	X	X

Table 1. Schedule Requirements

Item	Requirement	Schedule Level				
		1	2	3	4	5
Computer Software	Prepare schedules using the latest version of Primavera version P6 or higher or Microsoft Project. Refer to Section 01015 for project specific requirements.		X	X	X	X
Scheduler's Qualifications	Submit scheduler's qualifications for review and approval			X	X	X
Submittal Review Time	Include review and re-submittal times for review of Shop Drawings and Samples. Each item listed in the Preliminary Schedule of Shop Drawings and Samples shall be included in the schedule.			X	X	X
Procurement Activities	Include separate activities for the procurement process of long-lead and major items that require a cycle of more than 30 days or fall within the critical path. Procurement cycle activities include, but are not limited to, submittals, approvals, purchasing, fabrication, and delivery.			X	X	X
Startup and Testing Time	Include not less than two days for startup and testing.			X	X	X
Constraints	Include constraints and work restrictions indicated in the Contract Documents and as follows in schedule, and show how the sequence of the Work is affected.		X	X	X	X
Phasing	Arrange list of activities on schedule by phase.		X	X	X	X
Work by City	Include a separate activity for each area of the Work performed by City.		X	X	X	X
Products Ordered in Advance	Include a separate activity for each product. Delivery dates indicated stipulate the earliest possible delivery date.		X	X	X	X
City-Furnished Products	Include a separate activity for each product. Delivery dates indicated stipulate the earliest possible delivery date.		X	X	X	X
Work Restrictions	Show the effect of the following items on the schedule: • Coordination with existing construction. • Limitations of continued occupancies. • Uninterruptible services. • Partial utilization before Substantial Completion. • Use of premises restrictions. • Provisions for future construction. • Seasonal variations. • Environmental control.			X	X	X
Work Stages	Indicate important stages of construction for each major portion of the Work, including, but not limited to, the following: • Subcontract awards. • Submittals. • Purchases. • Fabrication. • Sample testing. • Deliveries. • Installation. • Tests and inspections.			X	X	X

Table 1. Schedule Requirements

Item	Requirement	Schedule Level				
		1	2	3	4	5
	• Adjusting. • Curing. • Startup and placement into final use.					
Area Separations	Identify each major area of construction for each major portion of the Work. Indicate where each construction activity within a major area must be sequenced or integrated with other construction activities: • Contractor Mobilization* • Procurement – Divided by Long Lead and Short Lead • Completion of civil work • Completion of structural work • Completion of mechanical installation • Completion of electrical installation • Partial Utilization • Substantial Completion* • Achievement of Full Operations* • Punch List and Final Corrections* • Final Completion* *Required element, all others to be used as applicable based on project scope.			X	X	X
Contract Modifications	For each proposed contract modification and concurrent with its submission, prepare a time-impact analysis using fragments to demonstrate the effect of the proposed change on the overall project schedule.		X	X	X	X
Work under More than One Contract or Subcontract.	Include a separate activity for each contract or subcontract.			X	X	X
Detailed by Work Package	Include detailed information by each work package and display all activities to be accomplished by the workforce with durations of 7 or more calendar days				X	X
Detail by Task	Include detail by task to support the short-term planning for the field, normally for those activities of less than 1-week duration.					X

B. Cost Correlation:
   1. Requirement to provide a Cost Correlation shall be as indicated in Section 01015 – Specific Project Requirements.
   2. At the head of schedule, provide a cost correlation line, indicating planned and actual costs. On the line, show dollar volume of the Work performed as of dates used for preparation of payment requests.

1.12 PRELIMINARY AND BASELINE PROJECT SCHEDULES

A. Indicate each significant construction activity separately. Identify each Monday of each week with a continuous vertical line. Outline significant construction activities for the first 60 days of construction. Include skeleton diagram for the remainder of the Work.

B. Preliminary Network Diagram – Outline significant construction activities for the project. To be submitted with the Preliminary Progress Schedule.

1.13 PROGRESS SCHEDULES

A. General – Prepare Progress Schedules using a CPM network analysis diagram.

B. CPM Schedule Preparation – Prepare a list of all activities required to complete the Work. Using the preliminary network diagram, prepare a skeleton network to identify probable critical paths:

1. Activities – Indicate the estimated time duration, sequence requirements, and relationship of each activity in relation to other activities. Include estimated time frames for the following activities:
   (a) Preparation and processing of submittals.
   (b) Purchase of materials.
   (c) Delivery of materials and equipment.
   (d) Fabrication.
   (e) Installation.
2. Processing – Process data to produce output data or a computer-drawn, time scaled network. Revise data, reorganize activity sequences, and reproduce as often as necessary to produce the CPM schedule within the limitations of the Contract Time.
3. Format – Mark the critical path. Locate the critical path near center of network; locate paths with most float near the edges:
   (a) Sub-networks on separate sheets are permissible for activities clearly off the critical path. Develop network diagram in sufficient time to submit CPM schedule so it can be accepted for use no later than 30 days after date established for the Notice to Proceed.
   (b) Establish procedures for monitoring and updating CPM schedule and for reporting progress monthly. Coordinate procedures with progress meeting and payment request dates.
   (c) Use "one calendar day" as the unit of time.
4. Initial Issue of Schedule – Prepare initial network diagram from a list of straight "early start-total float" sort. Identify critical activities. Prepare tabulated reports showing the following:
   (a) Contractor or subcontractor and the Work or activity.
   (b) Description of activity.
   (c) Principle events of activity.
   (d) Immediate preceding and succeeding activities.
   (e) Early and late start dates.
   (f) Early and late 'finish dates.
   (g) Activity duration in days.
   (h) Total float or slack time.
   (i) Average size of workforce.
5. Schedule Updating – Concurrent with making revisions to schedule, prepare tabulated reports showing the following:
   (a) Identification of activities that have changed added or deleted.
   (b) Changes in logic ties.
   (c) Changes in early and late start dates.
   (d) Changes in early and late finish dates.
   (e) Changes in activity durations in days.
   (f) Changes in the critical path.
   (g) Changes in total float or slack time.
   (h) Changes in the Contract Time.

6. Value Summaries – Prepare two cumulative value lists, sorted by finish dates:
   (a) In first list, tabulate activity number, early finish date, dollar value, and cumulative dollar value.
   (b) In second list, tabulate activity number, late finish date, dollar value, and cumulative dollar value.
   (c) In subsequent issues of both lists, substitute actual finish dates for activities completed as of last date.
   (d) Prepare list for ease of comparison with payment requests; coordinate timing with progress meetings.
   (e) In both value summary lists, tabulate "actual percent complete" and "cumulative value completed" with total at bottom.
   (f) Submit value summary printouts one week before each regularly scheduled progress meeting.

C. Reports:
   1. Daily Labor Force Reports – Prepare a daily labor force report recording the following information concerning events at Project site:
      (a) List of subcontractors at Project site.
      (b) List of separate contractors at Project site.
      (c) List of all the Contractor's and subcontractor's personnel showing hours worked in labor class at Project site.
   2. Material Location Reports – At monthly intervals, prepare a comprehensive list of materials delivered to and stored at Project site. List shall be cumulative, showing materials previously reported plus items recently delivered. Include with list a statement of progress on and delivery dates for materials or items of equipment fabricated or stored away from Project site.
   3. Field Condition Reports – Immediately on discovery of a difference between field conditions and the Contract Documents, prepare a detailed report. Submit electronically and directly to City with a request for information. Include a detailed description of the differing conditions, together with recommendations for changing the Contract Documents.

D. Special Reports:
   1. General – Submit special reports within one day of an occurrence.
   2. Reporting Unusual Events – When an event of an unusual and significant nature occurs at Project site, whether or not related directly to the Work, prepare and submit a special report. List chain of events; persons participating; response by Contractor’s personnel; evaluation of results or effects; and similar pertinent information. Advise City in advance when these events are known or predictable.

PART 2 - PRODUCTS

Not used.

PART 3 - EXECUTION

3.01 PROGRESS SCHEDULES

A. Updates – At monthly intervals, update schedule to reflect actual construction progress and activities. Progress Schedule should be provided for review and approval prior to monthly pay request. Progress Schedules will be reviewed and discussed at regularly schedule progress meetings. Contractor shall bring printed copies of CPM Schedule:

1. Revise schedule immediately after an activity revision has been recognized or made at the direction by the City. Issue updated schedule concurrently with the report of each such progress meeting.
2. Include a report with updated schedule that indicates every change, including, but not limited to, changes in logic, durations, actual starts and finishes, and activity durations.
3. As the Work progresses, indicate actual completion percentage for each activity.
4. Post copies in Project meeting rooms and temporary field offices.

END OF SECTION

CITY OF FOUNTAINS
HEART OF THE NATION

KANSAS CITY
MISSOURI

DAILY FIELD OBSERVATION REPORT

Project Number _____

Project Title _____

Contractor _____

Report Number _____ Date _____ Time _____

Weather			Site Conditions		Day	
❑ Clear	❑ Snow	❑ Warm	❑ Clear	❑ Dusty	❑ Monday	❑ Thursday
❑ Overcast	❑ Foggy	❑ Hot	❑ Muddy	❑ _____	❑ Tuesday	❑ Friday
❑ Rain	❑ Cold	❑ Temperature Range _____			❑ Wednesday	❑ _____

Persons Contacted:

Work Observed:

Items Discussed:

Materials Delivered:

Requested Revisions or Interpretations:

Nonconforming Work Reported This Date To Contractor:

Remarks:

❑ Attachments

Signed by: Date:

Distribution:
- ❑ Owner
- ❑ Contractor
- ❑ Construction Manager
- ❑ Design Professional
- ❑ Consultant _____
- ❑ Other _____

CITY OF FOUNTAINS
HEART OF THE NATION

KANSAS CITY
MISSOURI

PERIODIC FIELD OBSERVATION REPORT

Project Number _____

Project Title _____

Contractor _____

Report Number _____ Date _____ Time _____

Weather			Site Conditions		Day	
❑ Clear	❑ Snow	❑ Warm	❑ Clear	❑ Dusty	❑ Monday	❑ Thursday
❑ Overcast	❑ Foggy	❑ Hot	❑ Muddy	❑ _____	❑ Tuesday	❑ Friday
❑ Rain	❑ Cold	❑ Temperature Range _____			❑ Wednesday	❑ _____

Persons Contacted:

Work Observed:

Items Discussed:

Remarks:

❑ Attachments

Signed by: Date:

Distribution:
- ❑ Owner
- ❑ Contractor
- ❑ Construction Manager
- ❑ Design Professional
- ❑ Consultant _____
- ❑ Other _____

CITY OF FOUNTAINS
HEART OF THE NATION

KANSAS CITY
MISSOURI

WEEKLY REPORT OF WORKING DAYS

Project Number _____

Project Title _____

Contractor _____

Report Number _____ Week Ending: _____

DATE:	WORKING DAY	REMARKS

TOTAL THIS WEEK	PREVIOUSLY	TOTAL TO DATE	WORKING DAYS IN CONTRACT	REMAINING OR OVERTIME

Signed by OWNER'S REPRESENTATIVE Date:

Signed by CONTRACTOR Date:

Distribution: ❑ OWNER ❑ CONTRACTOR ❑ Construction Manager ❑ Design Professional ❑ Consultant ❑ Other

SECTION 01322 – PHOTOGRAPHIC AND VIDEO DOCUMENTATION

PART 1 - GENERAL

1.01 SUMMARY

A. This Section outlines the requirements for photographic and video documentation. The Contractor is solely responsible for the development of an overall plan to fully document Site conditions and the progress of the Work.

B. The Contractor shall hire a professional photographer to provide the services and deliverables described herein.

C. This section does not include work associated with internal closed-circuit television (CCTV) inspections of sewer gravity pipes. See Section 02686 – CCTV Inspection of Sewer Mains.

1.02 SPECIFICATION MODIFICATIONS

A. It is understood that throughout this section these Specifications may be modified by appropriate items in Section 01015 – Specific Project Requirements or as otherwise indicated in the contract documents.

1.03 RELATED SECTIONS

A. Section 00700 – General Conditions.

B. Section 01015 – Specific Project Requirements.

C. Section 01300 – Submittals.

D. Section 01320 – Construction Progress Documentation.

E. Section 01335 – Document Management.

F. Section 02686 – CCTV Inspection of Sewer Mains.

1.04 DEFINITIONS

A. Pre-Construction Video: A video taken to document Site conditions prior to the start of construction.

B. Pre-Construction Photographs: Photographs taken to document Site conditions prior to the start of construction. All Pre-Construction Photographs shall be digital, indexed on an interactive map and shown on a View Location Map.

C. Construction Progress Photographs: Digital photographs taken to document the progress of construction.

D. Construction Activity Photographs: Digital photographs taken to document specific construction activities.

E. Post-Construction Photographs: Digital photographs taken after final restoration to document the finished condition of the Site.

F. Affidavit of Authenticity: The photographer's signed and notarized affidavit, attesting to the production of the original photographs, videos and their authenticity.

1.05 SUBMITTALS

A. Submit as specified in Section 01300 – Submittals.

B. Other required Submittals:

1. Photographer's Qualifications: Submit for review and approval the qualification information demonstrating the photographer meets the requirements of paragraph 1.06 of this Section.
2. Phasing Plan: If applicable, submit for review and approval a phasing plan for Pre-Construction Photographs and Videos.

3. Pre-Construction Photographs: Submit for review and approval digital pre-construction photographs with an interactive index map, Photograph Navigation System (see paragraph 2.05 of this Section) and affidavit of authenticity.
4. Pre-Construction Video: Submit for review and approval a pre-construction video with a Video Navigation System (see paragraph 2.05 of this Section) and affidavit of authenticity (see paragraph 1.04 of this Section).
5. Construction Progress Photographs: On a monthly basis, submit digital construction photographs, interactive index map and affidavit of authenticity.
6. Construction Activity Photographs: On a monthly basis, submit digital activity photographs (if different than progress photographs), interactive index map and affidavit of authenticity.
7. Post-Construction Photographs/Video: Submit for review and approval digital post-construction photographs or video, interactive index map and affidavit of authenticity.

1.06 QUALITY ASSURANCE

A. The Contractor is responsible for the quality assurance and quality control of the Work.
B. General Quality: Photographs and video shall be clear and of sufficient quality to show relevant detail. They shall not be blurred, taken in shadow or too far away to provide conclusive information. The City may require that the photographs or video be retaken should the quality be insufficient. Costs for such re-takes are the Contractor's sole responsibility and shall be done at no extra cost to the City.
C. Qualifications of Photographer: The Contractor shall engage the services of a professional photographer with a minimum of 3 years of experience in construction photography to document the conditions of the project site. Upon request, samples of the photographer's prior work and/or references shall be submitted.
D. Affidavit of Authenticity: The Contractor shall provide the photographer's signed and notarized affidavit, attesting to the production of the original photographs, videos and their authenticity. An affidavit of authenticity shall be provided with each submittal/deliverable.

1.07 MINIMUM REQUIREMENTS

A. The section specifies several different sets of photographic and video documentation requirements. The extent of documentation will depend upon the size and type of the project. The following table summarizes the basic documentation requirements.

Table 1. Summary of Requirements

Set of Documentation	Mandatory	As Required by Section 01015
Pre-Construction Video		✓
Haul Route Video		✓
Pre-Construction Photographs	✓	
Interactive Index Map		✓
Construction Progress/Activity Photographs		✓
Post-Construction Photographs/Video		✓

1.08 OWNERSHIP

A. The photographs and videos shall become the sole property of the City.

1.09 SCHEDULES

A. Schedule of Values: Photographic/Video documentation shall be listed as one line item in the Schedule of Values.

B. Construction Progress Documentation: Each set of photographs or videos shall be listed in the Preliminary Project Schedule as a discrete activity. See Section 01320 – Construction Progress Documentation.

1.10 PHASING

A. Based on the nature and scope of the Work, the Contractor may phase the Pre-Construction Photographs and Video. If phasing is to be implemented, the following shall apply:
   1. The Contractor shall submit a Phasing Plan that identifies each area of the Work.
   2. For each phase, Pre-Construction Photographs and Videos shall be taken within 21 days of the start of construction activities unless otherwise approved in writing by the City/Design Professional.

B. Under no circumstances shall construction begin in any area until the Pre-Construction Photographs and/or Video have been submitted and approved by the City/Design Professional.

PART 2 - PRODUCTS

2.01 PHOTOGRAPH QUALITY

A. Photographic images shall be captured in digital format, with a minimum of 10-megapixel resolution and taken without JPG compression.

B. Each photograph shall include a date/time stamp in the image, showing when the image was taken.

2.02 VIDEO QUALITY

A. All video recordings shall be captured in full 1080-dpi Hi-Definition digital format, without compression or file-reduction whether applied in-camera or after capture during editing.

B. The original video segments shall be retained in the format captured in camera (such as MP4 or MTS for Canon HD Video) without compression or modification that would reduce resolution or quality. The video shall include a date/time stamp in the image, showing when the image was taken. Video shall include verbal description and narrative of what is being captured.

2.03 METADATA

A. Digital files for photographs and videos shall, at a minimum, contain the following metadata:
   1. Project Name.
   2. Date and Time Taken.
   3. All other metadata inherently provided by the camera/video equipment.

2.04 MEDIA LOG

A. The Contractor shall maintain a media log (photographs and videos) for the project. The log shall include, but is not limited to, the following information for each photograph and/or video:
   1. Project Name.
   2. Project Number.
   3. Contract Number.
   4. Name of City and Department.

5. Name of Contractor.
6. Name of Design Professional.
7. Photograph file name (the specific format should be tied to the project name). Photograph file name shall be unique to each digital file and shall be embedded in the digital image in a manner that is permanent and clearly legible when the file is opened.
8. Include a date designator in file names.
9. Date the photograph was taken.
10. The name of the photographer who took the photograph.

2.05 PHOTOGRAPH AND VIDEO NAVIGATION SYSTEM

A. If specified in Section 01015 – Specific Project Requirements, the Contractor shall provide an electronic photographic and video navigation system (navigation system) for searching and viewing recorded imagery.

B. Interactive Index Map: The navigation system shall indicate the general location of each area photographed or video recorded using icons and other suitable mark-ups on the actual construction drawings in PDF-format.

C. The navigation system shall utilize standard PDF-reader software (such as Adobe Reader, Acrobat, or Bluebeam Vu) or other software that shall be included with the deliverables. Icons shall be individually hyperlinked to the respective photograph, video, affidavit of authenticity and media log file for immediate playback in Windows Media Player, VLC or other players.

D. The navigation system shall include the following:
   1. Project Name.
   2. Project Number.
   3. Contract Number.
   4. Name of City.
   5. Name of Contractor.
   6. Name of Design Professional.
   7. Ranges of dates for which the photographs or videos were taken.
   8. The name of the photographer.
   9. Affidavit of Authenticity.
   10. Media Log.
   11. Photographs.
   12. Videos.

E. A navigation system shall be provided for each set of photographs and videos taken.

PART 3 - EXECUTION

3.01 PRIOR TO PHOTOGRAPHIC AND VIDEO DOCUMENTATION

A. Construction Limits: Prior to the Pre-Construction Photographs and Video, the Contractor shall flag or mark the construction limits and excavation areas for identification, and project centerlines shall be physically marked with survey stakes and/or high visibility paint (including station numbers).

B. Mark Utilities: Prior to the Pre-Construction Photographs or Video, the Contractor shall notify utilities and have them marked so that utility locations are documented.

C. Coordinate with City: For any work that requires a representative of the City to be present, the Contractor shall provide the City a minimum of 2 days' notice.

3.02 PRE-CONSTRUCTION VIDEO

A. If specified in Section 01015 – Specific Project Requirements, the Contractor shall provide a pre-construction video.

B. Scope: Prior to the start of construction, the Contractor shall prepare a color video recording with audio of all the areas to be affected by construction. All pre-construction video recordings shall have sufficient detail to reveal the condition (including defects and damage) of all existing features, such as pavement, driveways, culverts, inlets, sidewalks, landscaping, vegetation, creek banks, trees, structures, foundations and other such items along the construction route and in the immediate adjacent areas, which might be affected by the construction operations. In addition, the videographer shall move beyond the construction zone as needed to ensure documentation of features and areas that may not be adequately recorded from the centerline rotations. Videos shall be taken on both sides of the street when construction is in or along a roadway (use this approach along drainage channels and in other similar situations).

C. Schedule: Taken after utilities have been marked and prior to the placement of materials or equipment on the Site. Videos shall be submitted to the City for review and approval. Under no circumstances shall construction begin until the pre-construction video has been submitted and approved.

D. The pre-construction video recording shall be done in the presence of a representative of the City.

E. The Contractor shall document all pre-existing site conditions/elements of the Site, the same as listed for the Pre-construction Photographs.

F. The video documentation shall provide a clear and continuous view of the project showing all visible utilities and features within the limits of construction.

G. To preclude the possibility of tampering or editing in any manner, all video recordings shall, by electronic means, generate and display continuously and simultaneously on the screen or in the video file metadata properties digital information to include the date and time of recording. The time information shall consist of hours, minutes and seconds, separated by colons (i.e., 10:35:18).

H. The audio/video recording shall consist of one video and one audio track which shall be recorded simultaneously. All tracks shall consist of the original live recordings and thus shall not be copies of other audio or video recordings.

I. The audio track shall contain the narrative commentary. Ample descriptive narrative shall be recorded simultaneously during all recordings. Narration shall include clearly audible comments that will deliver station number and/or street address, locations, direction of view and rotation.

J. Typical video segments should not exceed 10 minutes in length.

K. Rotations of 360-degrees shall be at the beginning and end of each video segment and at each 100 foot increment throughout the video.

L. The rate of speed in the general direction of travel of the conveyance used during recording shall be controlled to provide a usable image. On average, the rate of forward travel during videotaping shall not be less than fifteen minutes for every 1000 linear feet of pipeline route or street centerline; slower rates shall be utilized in residential/commercial areas.

M. Panning rate, zoom-in rate and zoom-out rate shall be controlled sufficiently such that playback will provide clarity of the object viewed.

N. All recording shall be done during times of good visibility. No recording shall be done during periods of precipitation unless authorized by the City.

3.03 HAUL ROUTE VIDEO

A. If specified in Section 01015 – Specific Project Requirements, the Contractor shall provide pre-construction video documentation of all haul routes associated with the Project.
B. Haul route videos shall be made at the time of the Pre-Construction Photographs.
C. Haul Route Videos shall meet the requirements of the paragraph PRE-CONSTRUCTION VIDEO as well as the following:
   1. Haul routes shall be recorded during daylight hours and during good weather conditions.
   2. Video equipment may be mounted on a vehicle. The speed of the vehicle while recording shall not be more than 5 miles per hour (mph). If traffic or safety concerns prohibit driving 5 mph then the video shall be taken while walking the route.
   3. No audio/narrative commentary is required for the haul route video.

3.04 PRE-CONSTRUCTION PHOTOGRAPHS

A. The Contractor shall provide pre-construction photographs as specified in this Section and as specified in Section 01015 – Specific Project Requirements.
B. Scope: The purpose for pre-construction photo documentation is to record existing conditions, damage and features on or adjacent to the project site. The principal reason for obtaining photographs is so that items such as cracked curbs, broken pavement, sidewalks, plugged culverts, driveway conditions, lawn conditions and other existing conditions located in the Project Site may be clearly shown and documented. This will to some degree mitigate the possibility of post-construction restoration issues with property owners in the Project area.
C. Schedule: Take photographs after utilities have been marked, prior to placement of materials or equipment on the Site and prior to the start of construction activities in an area. Photographs shall be submitted to the City for review and approval. Under no circumstances shall construction begin until the pre-construction photographs have been submitted and approved.
D. Pre-construction photographs shall be taken at sufficient intervals to be able to carefully document the pre-construction conditions of the Site and in no case more than 50-foot intervals along the street, right-of-way, drainage easement and water/wastewater line route before commencement of the Work.
E. In addition, select photographs shall be taken as needed along the construction limits, and of adjacent properties, to ensure documentation of features and areas that may not be adequately recorded in the centerline rotations. Photographs shall be taken along both sides of the street when construction is in or along a roadway.
F. Overlapping composition techniques shall be employed to ensure maximum photographic coverage.
G. Pre-construction photographs shall be taken after the utility locations have been marked.
H. Pre-construction photographs shall be taken with a representative of the City present unless otherwise authorized by the City.
I. All Pre-Construction Photographs shall have sufficient detail to reveal the condition (including defects and damage) of all existing features, such as pavement, driveways, culverts, inlets, sidewalks, landscaping, vegetation, creek banks, trees, structures, foundations and other such items along the construction route, and adjacent areas which might be affected by the construction operations. An identifier such as house or business address/signs, property numbers, mail boxes, landscaping, etc… shall be included when practical in each view for ease of identification.
J. At a minimum, pre-construction photographs must be taken of the following views:
   1. The entire street right of way and limits of construction; whichever is greater.
   2. The entire easement width and length (both permanent and temporary).

3. All curb lines (both sides of street) – all pre-existing curb damage not called for replacement within the Work and shall include major cracks.
4. All driveways, steps, and curbs and curb ramps (both sides of street).
5. Fence and gate conditions.
6. Trees, ornamental shrubs, plantings/planter boxes and evidence of irrigation features.
7. Other privately or publicly owned features or facilities that might be disturbed by the construction.
8. Views of structures, both inside and adjacent to the project site and easements in areas where the Contractor will be working within five (5) feet of said structure.
9. Prominent utility features, such as: guy wires, poles, signs, valves, fire hydrants, meters, pull boxes, etc.
10. Streams and stream banks within the limits of construction.
11. At the discretion of the Contractor, photograph offsite roadways that will be subjected to heavy usage such as for haul routes or delivery of heavy components or equipment. Refer to Paragraph HAUL ROAD VIDEO for additional requirements.
12. Other significant or prominent features to protect the City and the Contractor following construction (e.g. close-up photographs of pre-existing broken curbs, cracked/failed pavement, damaged adjacent retaining walls, etc.).
13. Views of structures, both inside and adjacent to the ROW/easement in areas where the Contractor will be working within five (5) feet of said structure.
14. Other views as requested by the City.

3.05 CONSTRUCTION PROGRESS PHOTOGRAPHS

A. If specified in Section 01015 – Specific Project Requirements, the Contractor shall provide Construction Progress Photographs.
B. Scope: The Contractor shall provide construction progress photographs to depict the progress of the work. The Contractor shall be responsible for photographs of the Site to show the existing and general progress of the Work. The City will advise as to which views are of interest.
C. Schedule: Photographs shall be taken at the time of the Pre-construction Photographs, a minimum of once per month throughout the duration of the Project, and at the time of the Post Construction Photographs. Construction Progress Photographs are to be submitted each month with the Contractor's Application for Payment. Applications for Payment was not be considered acceptable until the photographs are provided.
D. This set of photographs will be taken as close as possible to the same locations and views of the pre-construction photography.

3.06 CONSTRUCTION ACTIVITY PHOTOGRAPHS

A. If specified in Section 01015 – Specific Project Requirements, the Contractor shall provide Construction Activity Photographs.
B. Scope: The Contractor shall provide photographs taken to document Site conditions and specific construction activities throughout the duration of the Project.
C. Schedule: Photographs shall be taken two times per month (every two weeks) for the duration of the Project.
D. Construction Activity Photographs are to be submitted each month with the Contractor's Application for Payment.
E. Photographs shall be taken to depict the work accomplished during the month. These photographs are to include, but are not limited to, the following:
   1. Work not yet covered up.
   2. When mechanical, electrical, plumbing or building inspections are scheduled.

3. The beginning of installation of major items of equipment.
4. After installation of major items of equipment.
5. Other significant construction activities.
6. As directed by the City.

3.07 POST-CONSTRUCTION PHOTOGRAPHS

A. If specified in Section 01015 – Specific Project Requirements, the Contractor shall provide Post-Construction Photographs.

B. Scope: The Contractor shall provide Post-Construction Photographs of the project area that documents the final restoration and construction improvements. Post-Construction photographs shall show the general condition of the construction zone (recording finished landscape and other restoration, plus construction improvements), and other areas that may have been affected by construction activities.

C. Schedule
   1. Photographs shall be taken after completion of the Substantial Completion punch list when the project is complete, the Site is restored to the satisfaction of the City, and before submission of the Application for Final Payment.
   2. Post-construction photographs shall be taken after all items have been address from the Substantial Completion inspection, after cleanup and site restoration, and before application for final payment.

D. Post-Construction Photographs are to be submitted with the Contractor's Application for Final Payment.

E. The Contractor shall coordinate the schedule of the post-construction photographs with the City's Project Manager and shall provide at least 5 days written notice to allow the City's Representative to be present when the photographs are taken.

3.08 POST-CONSTRUCTION VIDEO

A. If specified in Section 01015 – Specific Project Requirements, the Contractor shall provide a Post-Construction Video.

B. Scope: The Contractor shall prepare a color video recording with audio of all the areas affected by construction. All Post-Construction video recordings shall have sufficient detail to reveal the final, restored condition of all existing features, such as pavement, driveways, culverts, inlets, sidewalks, landscaping, vegetation, creek banks, trees, structures, foundations, and other such items along the construction route, and in the immediate adjacent areas, which might have been affected by the construction operations. In addition, videographer shall move beyond the construction zone as needed to insure documentation of features and areas that may not be adequately recorded from the centerline rotations. Videos shall be taken on both sides of the street when construction is in or along a roadway (use this approach along drainage channels and in other similar situations).

C. Schedule: The post-construction video shall be taken in conjunction with the post-construction photographs.

D. Post-construction videos are to be submitted with the Contractor's Application for Final Payment.

E. Unless otherwise authorized by the City, the post-construction video recording shall be done with a representative of the City present.

F. The Contractor shall document all post-construction site conditions/elements of the Site as listed for the post-construction Photographs.

G. The video documentation shall provide a clear and continuous view of the project alignment showing all visible utilities and features within the limits of construction.

H. To preclude the possibility of tampering or editing in any manner, all video recordings shall, by electronic means, generate and display continuously and simultaneously on the screen digital information to include the date and time of recording. The time information shall consist of hours, minutes and seconds, separated by colons (i.e., 10:35:18).
I. The audio video recording shall consist of one video and one audio track which shall be recorded simultaneously. All tracks shall consist of original live recordings and thus shall not be copies of other audio and video recordings.
J. The audio track shall contain the narrative commentary. Ample descriptive narrative shall be recorded simultaneously during all recordings. Narration shall include clearly audible comments that will deliver station number and/or street address locations, direction of view and rotation.
K. Typical video segments should not exceed 10 minutes in length.

3.09 DELIVERABLES

A. Refer to Section 01015 – Specific Project Requirements for additional deliverables required for the Project.
B. Delivery of the documentation record shall be made as soon as is practical after the images are recorded. Deliverables include original photographs in JPG format, photographs converted to pdf format, interactive map index and navigation system.
C. Electronic Storage Devices: Submit the navigation system on a non-returnable USB compatible flash drive. Submittals shall conform to the following:
   1. Submit with the monthly invoice two sets of digital photographs and/or videos. Each set shall be contained on a separate electronic storage device.
   2. Each set shall be cumulative of all photographs and/or videos taken to date.
   3. Affidavit(s) of Authenticity shall be included in a digital format.
D. Document Management System: Unless otherwise noted in Section 01015 – Specific Project Requirements, all deliverables shall be provided in an electronic format using the specified document management system and in accordance with paragraph 1.05 of this Section.

END OF SECTION

CITY OF FOUNTAINS
HEART OF THE NATION

KANSAS CITY
MISSOURI

TRANSMITTAL LETTER

Project Number _____

Project Title _____

TO: _____

ATTN: _____

Date _____
Re: _____

We are sending you
- ❑ Shop Drawings
- ❑ Copy of Letter
- ❑ Attached
- ❑ Prints
- ❑ Change Order
- ❑ Under separate cover via _____ the following items:
- ❑ Drawings
- ❑ Samples
- ❑ Specifications
- ❑ _____

Copies	Date	No.	Description

These are transmitted as checked below:

- ❑ For Approval
- ❑ For Your Use
- ❑ As Requested
- ❑ For Review and Comment
- ❑ Approved as Submitted
- ❑ Approved as Noted
- ❑ Returned for Corrections
- ❑ _____
- ❑ Resubmit _____ Copies for Approval
- ❑ Submit _____ Copies for Distribution
- ❑ Return _____ Corrected Prints

Remarks: _____

By: _____

Distribution:
- ❑ Owner
- ❑ Contractor
- ❑ Construction Manager
- ❑ Design Professional
- ❑ Consultant
- ❑ Other

SECTION 01335 –DOCUMENT MANAGEMENT

PART 1 - GENERAL

1.01 SUMMARY

A. An internet-based coordination and document management system (DMS) will be used for the Project. This system will be used to manage project documentation among the City, Contractor and Design Professional. The Contractor shall utilize the document management system for all project related correspondence and documentation.

B. The DMS will be utilized to create, track and organize all project documentation, including, but not limited to, the following:
   1. Schedules.
   2. Applications for Payment.
   3. Meeting minutes with action items.
   4. Project correspondence.
   5. Shop Drawing and Sample(s) Submittals.
   6. Transmittals.
   7. Change Management:
      (a) Requests for Interpretation.
      (b) Requests for Proposal.
      (c) Work Change Directives.
      (d) Change Orders.
   8. Reporting:
      (a) Certified Payroll Report.
      (b) Subcontractors and Major Material Suppliers List.
      (c) Daily Labor Force Reports.
      (d) Daily Inspection Reports.
      (e) Photographs and Video.
      (f) Certificate of Achievement of Full Operation.
      (g) Contractor Affidavit for Final Payment.
      (h) Subcontractor Affidavit for Final Payment.
      (i) Punch Lists.
   9. Notifications:
      (a) Correction of Defective Work.
      (b) Notification of Non-Compliance.

1.02 RELATED SECTIONS

A. Section 00700 – General Conditions.
B. Section 01015 – Specific Project Requirements.
C. Section 01300 – Submittals.

1.03 COORDINATION MEETING

A. Prior to the pre-construction conference, the City will facilitate a meeting with the Contractor to review requirements for project coordination, document control and use of the DMS. The meeting should be scheduled to allow the Contractor time to submit the initial project correspondence and preliminary schedules in accordance with Section 00700-General Conditions.

B. At this meeting, the City will present the procedures to be used for document management for the Project.

PART 2 - PRODUCTS

Not used.

PART 3 - EXECUTION

Not used.

END OF SECTION

SECTION 01500 – TEMPORARY FACILITIES

PART 1 - GENERAL

1.01 SUMMARY

A. This specification covers the requirements for temporary construction facilities required on all projects.

1.02 SPECIFICATION MODIFICATIONS

A. It is understood that throughout this section these Specifications may be modified by appropriate items in Section 01015 – Specific Project Requirements or as otherwise indicated on the Contract Drawings.

1.03 RELATED SECTIONS

A. Section 01000 – General Project Requirements.
B. Section 01015 – Specific Project Requirements.
C. Section 01300 – Submittals.

1.04 CODES AND STANDARDS

A. The publications listed below form a part of this specification to the extent referenced. The publications are referred to within the text by the basic designation only.
B. National Fire Protection Association:
   1. NFPA 10 - Standard for Portable Fire Extinguishers.
   2. NFPA 70 - National Electric Code.
   3. NFPA 241 - Standard for Safeguarding Construction, Alternation and Demolition Operations.

1.05 INFORMATION PROVIDED BY THE CITY

A. As provided in the Contract Documents.

1.06 SUBMITTALS

A. Submit as specified in Section 01300 – Submittals.

1.07 QUALITY ASSURANCE

A. The Contractor is responsible for the quality assurance and quality control of the Work.
B. Regulations – Comply with industry standards and applicable laws and regulations of authorities having jurisdiction, including but not limited to:
   1. Building Code requirements.
   2. Health and safety regulations.
   3. Utility company regulations.
   4. Police, Fire Department and rescue squad rules.
C. Standards:
   1. Comply with NFPA 10 and 241 and ANSI A10 Series standards “Temporary Electrical Facilities.”
   2. Comply with NEMA, NECA and UL standards and regulations for temporary electric service. Install service in compliance with NFPA 70.

D. Inspections – Arrange for authorities having jurisdiction to inspect and test each temporary utility before use. Obtain required certifications and permits.

PART 2 - PRODUCTS

Not used.

PART 3 - EXECUTION

3.01 OFFICE

A. Stationary Office – If required in Section 01015 - Specific Project Requirements, Contractor shall maintain a suitable stationary office at or near the Site during the performance of the Work.

B. Assigned Vehicle – For projects of a certain scale and duration, the City will allow the Contractor to use an assigned vehicle to serve as a mobile office at the site of the Work. See Section 01015 – Specific Project Requirements regarding the use of a vehicle in lieu of a stationary office.

C. The office shall serve as the headquarters of the Contractor's representative authorized to receive Contract Documents, instructions, other communication or articles associated with the Work.

D. Any communication given to the Contractor's representative or delivered to Contractor's office at the site of the Work shall be deemed to have been delivered to Contractor.

E. Copies of the Contract Documents shall be kept at the office and shall be available for use at all times.

3.02 FIELD OFFICE FOR RESIDENT PROJECT REPRESENTATIVE

A. See Section 01015 – Specific Project Requirements regarding the requirement of the Contractor to provide a field office for the Resident Project Representative.

3.03 TEMPORARY UTILITIES

A. Provide temporary utilities required for construction. Materials may be new or used, must be adequate for the required usage, not create unsafe conditions and not violate applicable codes and standards.

B. Power:

1. All power for lighting, operations of the Contractor's plant/equipment or for any other use which may be required for proper completion of the Work shall be provided by the Contractor.
2. Temporary heat and lighting shall be maintained until the Work is accepted.

C. Telephone/internet service:

1. Contractor shall make all necessary arrangements and pay all installation and monthly charges for telephone/internet service for the temporary office at the site and shall provide all required devices for such service.

D. Sanitary Facilities:

1. Contractor shall furnish temporary sanitary facilities at the site, as provided herein, for the needs of all construction workers and others performing work or furnishing services on the Project.
2. Sanitary facilities shall be of reasonable capacity, properly maintained throughout the construction period and obscured from public view to the greatest

practical extent. If toilets of the chemically treated type are used, at least one toilet will be furnished for each 20 persons. Contractor shall enforce the use of such sanitary facilities by all personnel at the site.

3. Ventilate the units to control odors and fumes and empty and clean them at least once a week or more often if required by the City. The doors shall be self-closing. Locate the facility behind the construction fence or out of the public view.

3.04 SECURITY

A. See Section 01000 – General Project Requirements – SECURITY regarding the requirements for security.

3.05 PARKING

A. See Section 01000 – General Project Requirements – PARKING regarding the requirements for parking.

END OF SECTION

SECTION 01566 – CLEANUP OPERATIONS

PART 1 - GENERAL

1.01 SUMMARY

A. The Contractor shall provide all material, labor and equipment necessary for cleanup operations. The Contractor shall maintain a neat and clean job site at all times.

1.02 SPECIFICATION MODIFICATIONS

A. It is understood that throughout this section these Specifications may be modified by appropriate items in Section 01015 – Specific Project Requirements or as otherwise indicated on the Contract Drawings.

1.03 RELATED SECTIONS

A. Section 00700 – General Conditions.
B. Section 01000 – General Project Requirements.
C. Section 01015 – Specific Project Requirements.
D. Section 02510 – PCC Sidewalks, Driveways, Ramps.
E. Section 02930 – Seeding.
F. Section 02931 – Sodding.
G. Section 03000 – Miscellaneous Concrete.

1.04 CODES AND STANDARDS

A. Not used.

1.05 DEFINITIONS

A. Not used.

1.06 INFORMATION PROVIDED BY THE CITY

A. As provided in the Contract Documents.

1.07 SUBMITTALS

A. The Contractor shall submit as specified in Section 01300 – Submittals, if proposing alternate methods and facilities for concrete washout facilities. See paragraph 3.03.E. 3 in this Section.

PART 2 - PRODUCTS (NOT USED)

PART 3 - EXECUTION

3.01 SITE MAINTENANCE

A. Cleanup operations shall be conducted in accordance with Section 00700 General Conditions, Article 6 – Contractor's Responsibilities.
B. Adequate cleanup shall be a condition for the processing of the Contractor's monthly progress payment applications.
C. The Contractor shall, at all times, keep the premises from accumulations of excavated materials, waste materials and other debris resulting from the Work. Site maintenance shall include, but is not limited to, the following:

1. The Contractor shall sweep streets daily to maintain the Site in a neat and clean condition.
2. Provide adequate trash receptacles on the Site and promptly empty when filled.
3. Conduct periodic cleanup of the Site to avoid hazards, interference with traffic or operations at the Site.
4. Keep construction materials such as pipe, forms and scaffolding neatly stacked.
5. Conduct immediate cleanup to protect the Work by removing splattered concrete, asphalt, oil, paint, corrosive liquids and cleaning solutions from all surfaces (linear construction) including walls, floors and metal surfaces (vertical construction) before the surfaces are marred.
6. Volatile wastes shall be properly stored in covered metal containers and removed from the Site daily.
7. Wastes shall not be buried on the site or disposed of into storm drains, sanitary sewers, streams or waterways. All wastes shall be removed from the site and disposed of in a manner complying with all local permits, ordinances and anti-pollution laws.
8. Overloading of trucks is prohibited to prevent spillages on all access and haul routes. The Contractor shall provide periodic inspection of traffic areas to enforce the requirements of this Section.
9. The Contractor shall prevent all excess material from washing into stream beds, storm water facilities, streets, culverts, etc.

D. All excavated material not incorporated into the Work shall be removed and disposed of by the Contractor so that the site will be left in equal or better condition than its original state.

E. Any deficiency in the quantity of material for filling depressions caused by settlement shall be supplied by the Contractor.

F. The Contractor shall remove all mobilized equipment, surplus materials, debris and temporary facilities from the site. The construction site shall be left in its original condition or better condition than before the Work commenced.

G. In addition, as directed by the City, the Contractor may be required to obtain a City approved release form, signed by the property owners affected by the Work.

3.02 DUST CONTROL

A. The Contractor shall take all reasonable measures to prevent unnecessary dust. Earth surfaces subject to dusting shall be kept moist with water or by the approved application of an approved chemical suppressant. When practical, dusty materials in piles or in transit shall be covered to prevent blowing.

B. The Contractor shall make provisions so that buildings or operating facilities that may be adversely affected by dust shall be adequately protected from dust. Existing or new machinery, motors, instrument panels or similar equipment shall be protected by suitable dust screens. Proper ventilation shall be included with dust screens.

C. Contractor shall maintain and keep all streets clean throughout the Work period. The Contractor shall perform street sweeping on a daily basis to remove dust and debris from paved areas within the Work site as well as on all access and haul routes.

3.03 CONCRETE WORK

A. See Section 02510 – PCC Sidewalks, Driveways and Handicap Access Ramps for additional requirements.

B. See Section 03000 – Miscellaneous Concrete for additional requirements.

C. Three (3) working days after all subsurface work has been completed, the contractor shall initiate the following restoration work: seed and/or sod (depending on contract requirements and/or written agreements with property owners), replacing concrete sidewalks, curbs, gutters, driveways and other surfaces impacted by the Work.

D. Three (3) working days after the placement of concrete, the Contractor shall conduct cleanup operations related to the completed concrete work as follows:
   1. Removal of forms, backfilling of the form excavation and debris removal from streets, sidewalks and parkway areas shall be accomplished within three (3) working days after the concrete placement. The backfilled areas within one foot of new concrete shall not be compacted until the concrete has cured a minimum of five (5) days.
   2. Five (5) working days after the concrete is placed, the Contractor shall complete all joint caulking, pavement restoration, seeding and sodding. If construction is being performed during periods other than designated seeding and sodding seasons, all locations without turf cover shall be completed within ten (10) working days after the beginning of the next seeding and sodding season. Refer to Section 02930 – Seeding and Section 02931 - Sodding for additional requirements.
   3. If cleanup, backfilling, sodding, joint caulking or pavement restoration is not accomplished within the above limits, all tear-out and installation operations shall cease until these items are finished. Proceeding without these items being completed is at the sole discretion of the City.
   4. All excavated material shall be removed and disposed of by the Contractor so that the grounds will be left in equal or better condition than its original state. Any deficiency in the quantity of material for filling depressions caused by settlement shall be supplied by the Contractor.
   5. Surplus materials, equipment, tools, temporary facilities and structures shall be removed by the Contractor; all debris shall be hauled away by the Contractor and the construction site shall be left in equal or better condition than its original state. Payment of completed items on the Schedule of Values shall be subject to the completion of the cleanup operations.
   6. Tear-out and installation shall not begin if unfavorable conditions for concrete placement are forecast for the next day.
   7. All cleanup operations, as stated above, shall be completed five (5) working days after concrete placement.

E. Concrete Washout Facilities:
   1. The Contractor shall provide facilities for concrete washout to collect and retain all the concrete washout water and solids in leak proof containers.
   2. Lined wash pits or washout boxes are acceptable.
   3. Alternate methods for washout facilities may be considered by the City. The Contractor shall submit for review and approval, per Section 01300 – Submittals, the alternate methods and facilities to be used.
   4. The location of washout facilities shall be indicated on the Construction Site Plan (See Section 01000 – General Project Requirements, paragraph CONSTRUCTION SITE PLAN).
   5. Concrete washout facilities shall be inspected daily and after heavy rains to check for leaks, identify any plastic linings or sidewalls that have been damaged by construction activities and determine whether they have been filled to over 75 percent capacity.

6. When the washout container is filled to over 75 percent of its capacity, the wash-water shall be vacuumed out or allowed to evaporate to avoid overflows. When the remaining cementitious solids have hardened, they shall be removed from the Site.
7. Damages to the washout container shall be repaired promptly.
8. Before heavy rains, the washout container's liquid level shall be lowered or the container shall be covered to avoid an overflow during the rain storm.
9. Washout facilities shall be removed from the Site upon completion of the Work and the area restored as specified herein.

END OF SECTION

SECTION 01570 - TEMPORARY EROSION AND SEDIMENT CONTROL

PART 1 – GENERAL

1.01 SUMMARY

A. The Contractor shall provide erosion and sediment control measures for all areas within and adjacent to the Project site. The Contractor shall assume that the work is to be done under the City's General Operating Permit (Permit No: MOR100006). The Contractor does not need to make separate application to the Missouri Department of Natural Resources (MDNR).

B. Specific erosion and sediment control measures are specified in APWA 5100 and Standard Erosion and Sediment Control (ESC) Drawings. These measures shall be implemented in order to control erosion and water pollution.

C. No separate payment shall be made for Erosion and Sediment Control. The Contractor shall include in the lump sum total bid price: all labor, material and equipment necessary to comply with this Section and all other Work indicated in the Contract Documents.

1.02 DESCRIPTION

A. The Contractor shall install and maintain temporary erosion and sediment control devices prior to commencing construction operations and continue through the construction period until such time as seeding and sodding has been completed and turf is established on all graded areas.

B. The Contractor shall prepare and implement a Stormwater Pollution Prevention Plan (SWPPP) utilizing the latest version of the City's SWPPP template to develop the plan. The plan must include a narrative of the types and appropriate uses of Best Management Practices (BMPs) for erosion and sediment control and stormwater management. The requirements of the SWPPP must be as stringent as those described in the City's General Operating Permit (No: MOR100006) and 10 CSR 20-6.200. Additionally, the SWPPP must comply with the City of Kansas City's MS4 permit.

C. Failure to control erosion and water pollution will result in the Contractor being noncompliant. Any noncompliance constitutes grounds for the following enforcement actions. The Contractor shall have 24 hours after receiving a notice of noncompliance from the City's representative (i.e. Project Manager, Design Professional, Inspector/ Representative of the City) to correct the problem. If weather conditions prevent the correction of BMPs within 7 calendar days, the reasons for the delay must be documented (including pictures) and there must be a narrative explaining why the work cannot be accomplished within the 7 day time period. The documentation must be filed with the regular inspection reports. The Contractor shall correct the problem as soon as weather conditions allow. If the Contractor fails to correct the problem after the time prescribed, the City will hire a remediation expert to fix the problem. In such an event, the Contractor shall be liable to the City for the remediation costs plus a 10 percent mark-up of the total contract price. If the Contractor continues to be noncompliant, the Director (or an authorized agent thereof) may issue a stop work order and delay any payment until control measures are properly functioning and any damage has been mitigated. In such an event, any delay to the Project schedule will result in liquidated damages assessed against the Contractor.

1.03 SPECIFICATION MODIFICATIONS

A. It is understood that throughout this section, these Specifications may be modified by appropriate items in Section 01015 – Specific Project Requirements or as otherwise indicated on the Contract Drawings.

1.04 RELATED SECTIONS

A. Section 01000 – General Project Requirements.
B. Section 01015 – Specific Project Requirements.
C. Section 01300 – Submittals.
D. Section 02200 – Earthwork.
E. Section 02575 – Surface Restoration.
F. Section 02930 – Seeding.
G. Section 02931 – Sodding.

1.05 QUALITY ASSURANCE

A. The Contractor is responsible for the quality assurance and quality control of the Work. The Work shall be performed by a contractor with a proven record of performance for similar erosion and sedimentation control work.

1.06 INFORMATION PROVIDED BY THE CITY

A. As provided in the Contract Documents.

1.07 CONTRACTOR SUBMITTALS

A. The Contractor shall submit to the City/Design Professional for review and approval, in accordance with Section 01300 – Submittals, all specifications and data covering the proposed materials to be used for erosion and sedimentation control work.
B. The Contractor shall submit the following to the City/Design Professional for review and approval prior to the preconstruction conference:
   1. The Contractor shall prepare a Stormwater Pollution Prevention Plan (SWPPP) for Projects that disturb one or more acres of land or disturb less than one acre when part of a larger Project which will disturb one or more acres over the life of the Project.
   2. The SWPPP shall meet the requirements of this Section, applicable references on the plans, the City's adopted Erosion and Sediment Control Specifications (ESCS), and all sections of the APWA-KCMO specifications that reference erosion control requirements. The Contractor shall develop, implement, and adhere to the erosion control and stormwater pollution prevention plan based upon the City's guidelines and requirements.
   3. No work can begin until the SWPPP is approved by the City/Design Professional.
   4. The Contractor shall update and maintain the SWPPP as necessary to develop ongoing site-specific control measures until final acceptance of the Project.

PART 2 – PRODUCTS

B. Unless otherwise specified in Section 01015 – Specific Project Requirements, acceptable products for Inlet Protection include the following:
   1. Gutter Buddy, Dandy Curb® or approved equal.

PART 3 – EXECUTION

3.01 SAFETY

A. Perform all work in accordance with applicable Occupational Safety and Health Administration (OSHA) standards.

3.02 PERFORMANCE

A. City Projects are covered by a general NPDES permit maintained by the Water Services Department's Storm Water Division. The Permit imposes a number of obligations including, but not limited to, the following:

1. New Projects must be reported to the MDNR 90 days before the Project starts.
2. Each site must have and follow a written Storm Water Pollution Prevention Plan (SWPPP). Each site must be inspected weekly and following each rain event, for compliance with the SWPPP. Written inspection reports must be kept.
3. All personnel on site must be briefed on the requirements of the SWPPP.
4. A copy of the SWPPP must be on site at all times.
5. All deficient items shall be promptly corrected. In no case shall the correction period exceed two calendar days.
6. Quarterly reports must be filed by the City with MDNR identifying and giving the status and percent complete of each Project.
7. MDNR must be notified if hazardous substances or contaminated soil are discovered on site.

B. The Contractor shall follow the approved SWPPP, as well as all erosion control measures included in the Contract Documents and implement other BMP measures as directed by the City/Design Professional.

C. The Contractor shall prevent erosion during his operations until vegetation is re-established. The Contractor shall prepare erosion control plans and submit in writing to the City/Design Professional any proposed modifications to the plans. The proposed modifications shall describe materials that will be used and the tasks that will be performed to control runoff on the site.

D. Erosion control devices shall be in place before land is disturbed.

E. All earthen structures shall be seeded or sodded. See Section 02930 – Seeding or Section 02931 – Sodding for additional requirements.

F. Vegetation shall be established to provide adequate protection or develop other suitable means.

G. Sediment trapping devices shall been installed in the proper location prior to grading.

H. The Contractor shall establish perimeter sediment trapping measures that function properly.

I. The Contractor shall prevent sediment from leaving the site and/or from damaging adjacent property.

J. The Contractor shall prevent and or remove mud on public roads or at intersections with public roads that is related to the Project work being completed.

K. The Contractor shall provide a temporary construction entrance to reduce/eliminate the transport of mud from the construction site onto public right of ways.

L. The Contractor shall provide dust control measures for any graveled areas or exposed soil areas. See Section 01000 – General Project Requirements, paragraph DUST CONTROL for additional requirements.

M. The Contractor shall temporarily or permanently stabilize all areas with exposed soil. See Section 02930 – Seeding or Section 02931 – Sodding for additional requirements.

N. The Contractor shall adequately stabilize all finished cut and fill slopes.

O. All on-site drainage channels and outlets shall be adequately stabilized.

P. Route stream around work areas.

Q. Repair stream channel damages per the Contract Documents.

R. Provide stabilization or a temporary stream channel crossing where needed.

3.03 INSTALLATION

A. Methods, materials and maintenance shall be the sole responsibility of the Contractor. The Contractor and the City/Design Professional shall conduct weekly onsite inspections using the "Erosion and Sediment Control Checklist" provided by the Water Services Department. Remove any onsite pollutant sources (debris piles with petroleum cans, chemical containers, fueling trucks/tanks or other possible sources of pollution). Upon notification of a weather forecast with a reasonable likelihood of rain, or at the direction of the City/Design Professional, the Contractor shall construct temporary berms and install erosion control fencing as necessary to control the potential eroded sediment and prevent it from leaving the construction area. If the Contractor's construction operations are complete to the point where seeding or sodding is the major item at hand before final acceptance can be made, and seeding or sodding is out-of-season or disallowed by the City/Design Professional, the Contractor shall construct one of the following erosion control measures:

1. Incorporate the use of erosion control fencing immediately downstream of vulnerable areas that are susceptible to the formation of small streams. Maintain the erosion control devices until seeding or sodding season returns. Upon return of the sodding season, the area shall be re-graded to the lines and grades established in the Contract Drawings and sodded at the direction of the City/Design Professional. See Section 02930 – Seeding and Section 02931 – Sodding for additional requirements.
2. Terrace the ground with graded berms and incorporate the use of both temporary slope drains (See ESCS Section 10.03.4.3 and Section 02200 – Earthwork for additional requirements) and erosion control fencing (as specified in this Section). Maintain the erosion control devices until seeding or sodding season returns. Upon return of the seeding or sodding season, the area shall be re-graded to the lines and grades established in the Contract Drawings and seeded/sodded at the direction of the City/Design Professional. See Section 02930 – Seeding and Section 02931 – Sodding for additional requirements.
3. Fertilize, place seed or sod, and irrigate as directed by APWA-KCMO 2400. Maintain the erosion control devices until seeding or sodding season returns. Upon return of the seeding or sodding season the Contractor shall re-establish the grade and replace all dead seed or sod at the direction of the City/Design Professional. See Section 02930 – Seeding and Section 02931 – Sodding for additional requirements.

B. Silt fence shall be installed, inspected and maintained in accordance with APWA ESC–10.

C. Berms shall be constructed in accordance to APWA ESC–29:

1. Berms are required if the silt fence is not installed or properly maintained.
2. Inspection shall be frequent and repair or replacement shall be made promptly as needed.
3. Remove sediment deposits as necessary to provide adequate storage volume for the next rain.
4. The Contractor shall remove berms when they have served their usefulness.
5. Sediment trapped by this practice shall be uniformly distributed on the source area prior to seeding or sodding.

D. The Rock Check Dam shall be constructed, inspected and maintained in accordance to APWA ESC–15.

E. Inlet Protection. Work covered under this item consists of installing a Gutter Buddy, Dandy Curb® or equal inlet protection system for inlets and median barrier inlets without grates. The purpose is to keep silt, sediment and construction debris out of the storm system:

1. The inlet protection system shall be a sewn fabric unit enclosing a porous structure in the form of a cylindrical tube placed in front of and extending beyond the inlet opening on both sides.
2. Place inlet protection unit on the street with aggregate pouch near the inlet it will be installed to protect.
3. For oil and sediment, place absorbent in the sock tube.
4. Center the unit against curb or median inlet opening so that the curb side of the unit creates a seal with the curb or median barrier and inlet structure. There will be approximately twelve (12) inches of the inlet protection unit overhanging on each side of the opening. If the unit is not installed in this manner, it will not function properly.
5. The Contractor shall remove all accumulated sediment and debris from in front of the unit and from the street surface in the vicinity of every installed unit after each rain event or as directed by the City/Design Professional. Dispose of the unit at an appropriate recycling or solid waste facility when the unit is no longer being used.
6. Oil and sediment. Remove and replace absorbent when near saturation.

3.04 MAINTENANCE AND REPAIR

A. The Contractor is responsible for maintaining all erosion and sediment control measures until acceptance of the Project by the City.

B. Erosion control measures showing evidence of overtopping, breaks or erosion shall be repaired or replaced with suitable materials.

C. All storm sewer inlets shall be regularly maintained so that sediment will not enter the system.

D. Repair and clean-out all control measures that are not functioning properly.

E. Remove temporary measures that are no longer needed.

F. Seeded or sodded areas requiring maintenance (fertilizer, re-sodding, re-seeding or additional mulch and watering) shall be promptly addressed. See Section 02930 – Seeding and Section 02931 – Sodding for additional requirements.

3.05 WARRANTY

A. Seeding and sodding work shall have taken root and established satisfactory coverage before acceptance by the City. The Contractor shall maintain as described in paragraph 3.04 above and shall guarantee seeding and sodding for one (1) year after acceptance. The Contractor shall scarify, re-seed or re-sod, fertilize and mulch (seeded areas) any barren area greater than 1 square foot. See Section 02575 – Surface Restoration for requirements on early acceptance.

END OF SECTION

SECTION 01581 – PUBLIC COMMUNICATIONS

PART 1 - GENERAL

1.01 SUMMARY

A. This section covers communication procedures between the contractor and the public affected by construction activities.

B. Any time the contractor is acting on behalf of the City to perform work, the communications material between the contractor and the public shall adhere to these technical standards and is subject to review and approval by the City.

1.02 RELATED SECTIONS

A. Section 00700 – General Conditions:
   1. Article 6, paragraph 6.14 – Safety and Protection.

B. Section 01015 – Specific Project Requirements.

C. Section 01300 – Submittals.

1.03 DEFINITIONS

A. Affected Properties – homeowners, businesses, tenants or other entities whose everyday activities could be affected by the work.

1.04 INFORMATION PROVIDED BY THE CITY

A. The City will provide the contractor with an electronic file for mailing communications to affected property owners for the purpose of Project communications.

B. The City will provide the contractor with an electronic copy of approved communications templates to be distributed to affected properties.

1.05 SUBMITTALS

A. Submit as specified in Section 01300 – Submittals.

B. Notifications – Submit for review and approval all notification materials developed by the Contractor that are to be distributed to affected properties.

1.06 PUBLIC MEETINGS

A. Description – The contractor shall attend and participate in public meetings held for the project. The contractor's project manager shall attend and present project details. These details include, but are not limited to, the following:
   1. Project schedule.
   2. Project phasing.
   3. Disruptions to the neighborhood.
   4. Work hours.
   5. Temporary restoration efforts.
   6. Final restoration efforts.
   7. Field contact information.

B. The City will provide a location, date and time of the meeting and will facilitate the meeting.

C. See Section 01015 – Specific Project Requirements for additional meeting requirements.

1.07 DOOR HANGERS AND OTHER PRINTED COMMUNICATIONS

A. Description – Door hangers and other printed communications (fact sheets, post cards, signs, etc.) used throughout construction shall be distributed to inform homes and businesses of disruptions.

B. Templates – The City will provide templates for door hangers and other printed communications in an electronic format. See Figures 1 through 5 for an example door hanger.

C. Template Modification – The contractor may need to annotate the printed door hangers with project specific information. This effort may include describing the work and adding applicable date and time information for the benefit of the resident.

D. Review communications material – Review and approval of the communication materials by the City is required prior to the contractor's distribution of materials.

E. Printing and Reproduction – The contractor shall print door hangers, mailers and all other communication materials needed for the project.

F. Distribution List – The list of affected property owners will be provided by the City.

G. Mailing and Distribution – The contractor shall distribute the door hangers and other printed communications to the affected property owners. Door hangers are to be hand-delivered and not placed in the mailbox. All other printed communications will be delivered in a manner acceptable to the City.

H. Costs – All costs to develop, reproduce, deliver or mail notifications shall be included in the contractor's lump sum bid price.

1.08 NOTIFICATION OF UTILITIES

A. Notify utilities in accordance with Section 00700 – General Conditions, Article 6.

1.09 NOTICES TO PROPERTY OWNERS AND AUTHORITIES

A. As provided in Section 00700 - General Conditions, Article 6, the Contractor shall notify adjacent property owners and utilities when execution of the work may affect them.

B. Work Notice:
   1. General notice to affected property owners in advance of the work. Notice is required for any work within an easement. Notice shall be given for work within the City's right-of-way, outside of the street.
   2. Type of notification shall be a door hanger.

C. Denial of Access:
   1. Notice for when it is necessary to temporarily deny access to property, driveway, sidewalk or other facility.
   2. Type of notification shall be a door hanger.

D. Smoke Testing:
   1. Notice for when the Project involves smoke testing.
   2. Type of notification shall be a door hanger.

E. Utility Service Interruption:
   1. Notice for when any utility service connection must be interrupted.
   2. Type of notification shall be a door hanger.

F. Street Closures and Changes to Traffic Patterns:
   1. Notices to utilities and other concerned agencies prior to cutting or closing streets or other traffic areas or excavating near underground utilities or pole lines.
   2. Provide any additional notifications required by the traffic control permit.
   3. Type of notification will be written communication prepared and distributed by the Contractor.

G. Schedule – Notices shall be received by the affected properties no less than two (2) and no more than seven (7) calendar days prior to the work, denial of access, smoke testing, utility service interruption, street closures and changes to traffic patterns or other work that may require notification.

1.10 OTHER COMMUNICATIONS

A. See Section 01015 – Specific Project Requirements for additional communication requirements not specifically included herein or otherwise required by the Contract Documents.

PART 2 - PRODUCTS

Not used.

PART 3 - EXECUTION

Not used.

See example templates on pages 4-9.

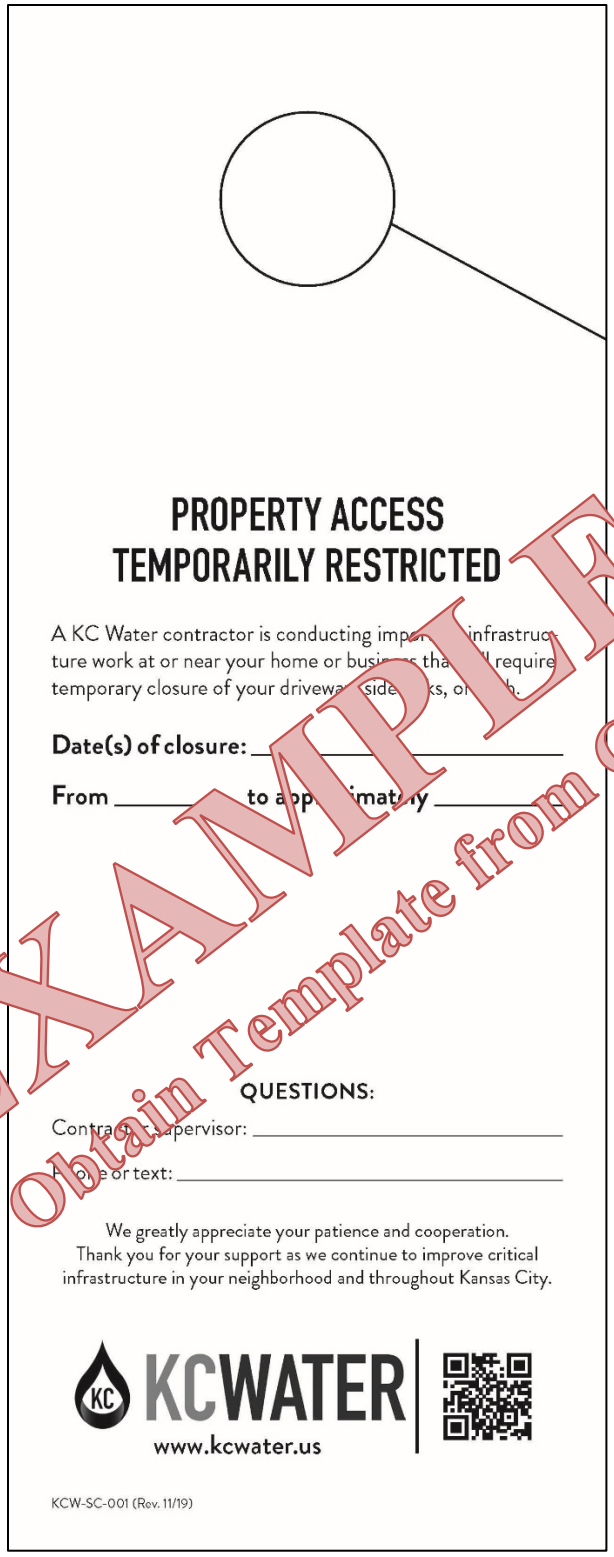

PROPERTY ACCESS
TEMPORARILY RESTRICTED

A KC Water contractor is conducting impo[illegible] infrastructure work at or near your home or busi[illegible]s tha[illegible] require temporary closure of your drivewa[illegible] side[illegible]ks, or [illegible]h.

Date(s) of closure: _____

From _____ **to a**[illegible]**imat**[illegible]**y** _____

QUESTIONS:

Contra[illegible]supervisor: _____

P[illegible]one or text: _____

We greatly appreciate your patience and cooperation.
Thank you for your support as we continue to improve critical infrastructure in your neighborhood and throughout Kansas City.

KCWATER
www.kcwater.us

KCW-SC-001 (Rev. 11/19)

EXAMPLE
Obtain Template from City

Figure 1 – Restricted Access Door Hanger

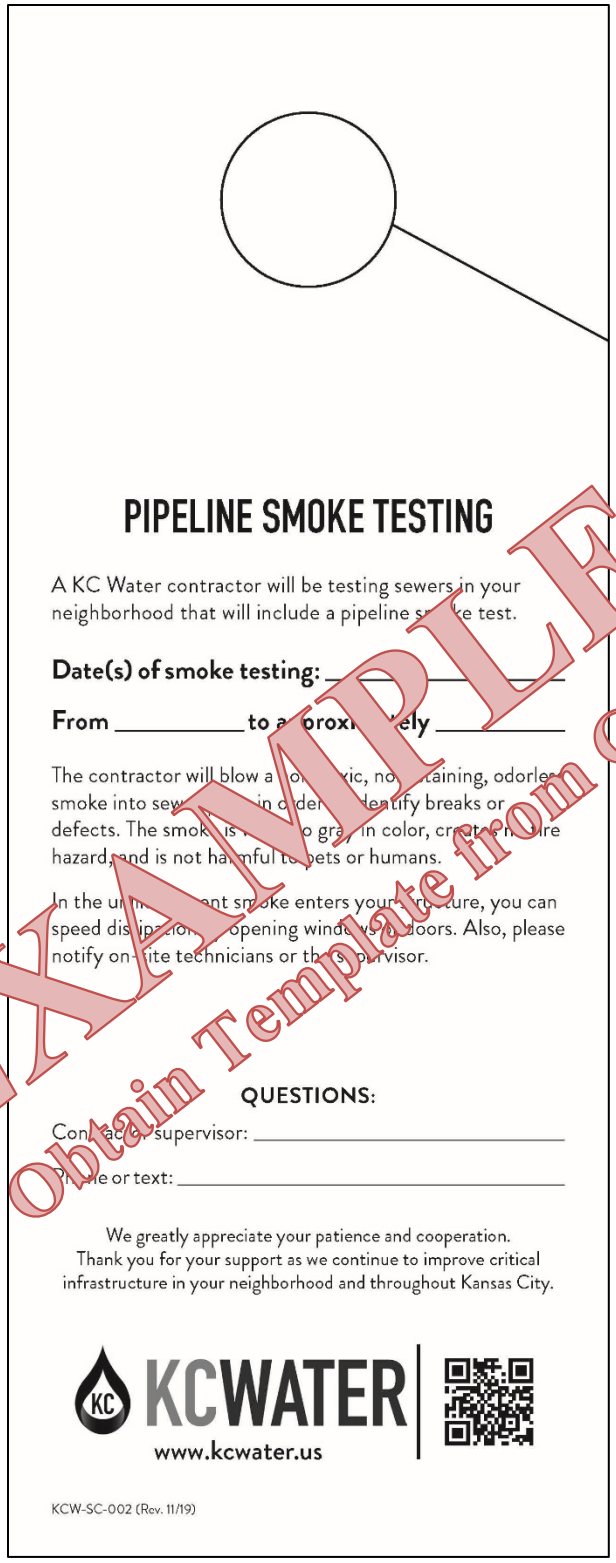

PIPELINE SMOKE TESTING

A KC Water contractor will be testing sewers in your neighborhood that will include a pipeline smoke test.

Date(s) of smoke testing: _____

From _____ **to approximately** _____

The contractor will blow a non-toxic, non-staining, odorless smoke into sewers in order to identify breaks or defects. The smoke is white to gray in color, creates no fire hazard, and is not harmful to pets or humans.

In the unlikely event smoke enters your structure, you can speed dissipation by opening windows and doors. Also, please notify on-site technicians or their supervisor.

QUESTIONS:

Contact the supervisor: _____

Phone or text: _____

We greatly appreciate your patience and cooperation.
Thank you for your support as we continue to improve critical infrastructure in your neighborhood and throughout Kansas City.

KCWATER

www.kcwater.us

KCW-SC-002 (Rev. 11/19)

EXAMPLE
Obtain Template from City

Figure 2 – Smoke Testing Door Hanger

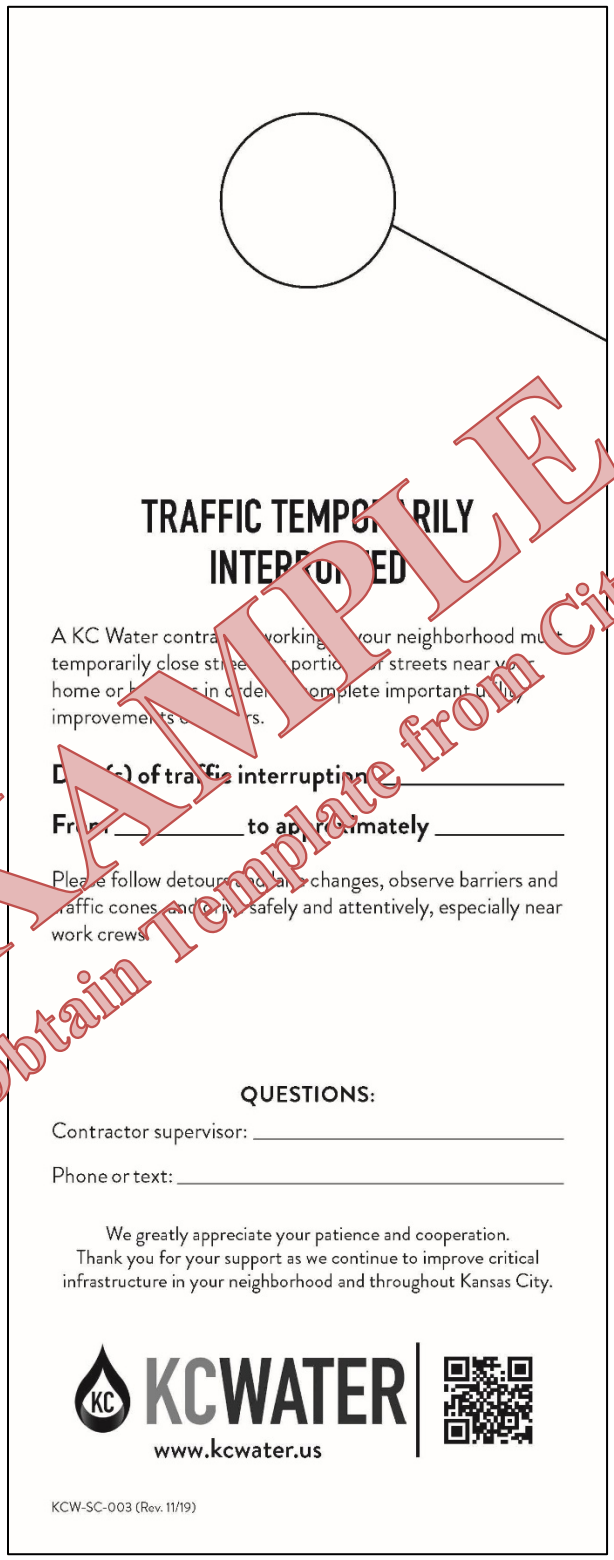

TRAFFIC TEMPORARILY INTERRUPTED

A KC Water contractor working in your neighborhood must temporarily close street portions or streets near your home or business in order to complete important utility improvements or repairs.

Date(s) of traffic interruption: _____

From _____ to approximately _____

Please follow detour and lane changes, observe barriers and traffic cones, and drive safely and attentively, especially near work crews.

QUESTIONS:

Contractor supervisor: _____

Phone or text: _____

We greatly appreciate your patience and cooperation.
Thank you for your support as we continue to improve critical infrastructure in your neighborhood and throughout Kansas City.

KCWATER

www.kcwater.us

KCW-SC-003 (Rev. 11/19)

EXAMPLE
Obtain Template from City

Figure 3 -Traffic Interruption Door Hanger

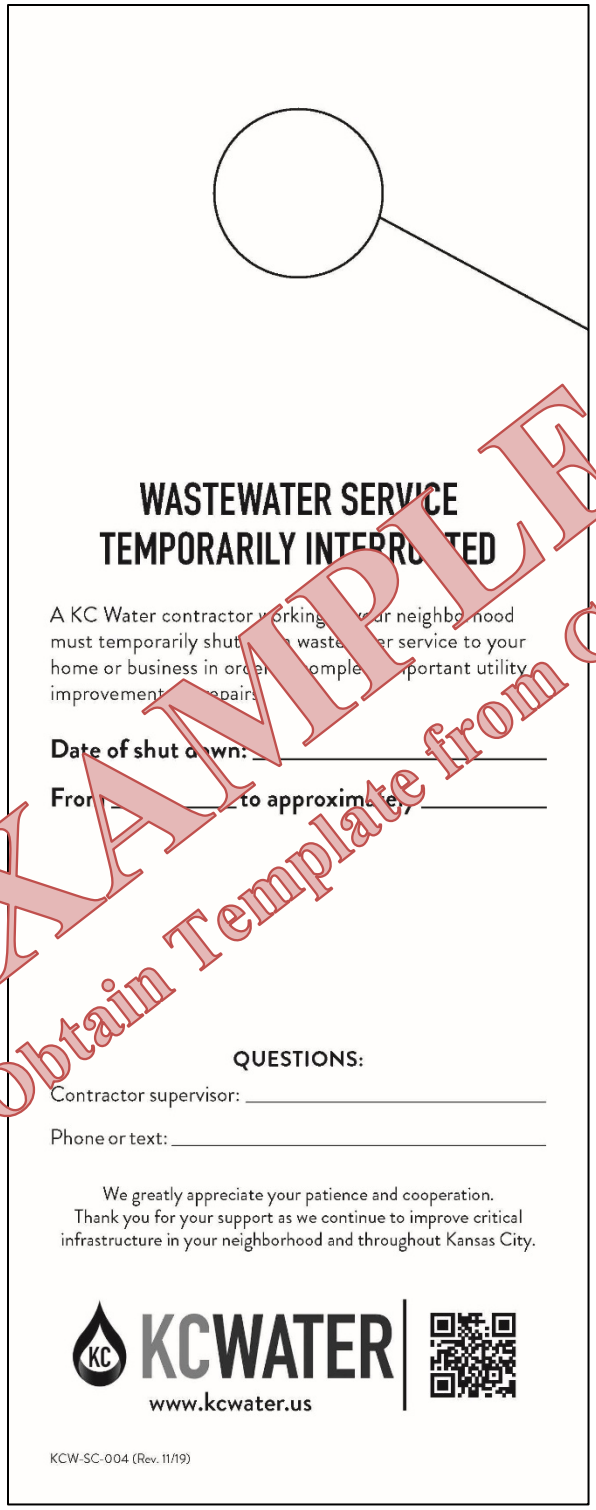

WASTEWATER SERVICE
TEMPORARILY INTERRUPTED

A KC Water contractor working in your neighborhood must temporarily shut off wastewater service to your home or business in order to complete important utility improvements or repairs.

Date of shut down: _____

From _____ **to approximately** _____

QUESTIONS:

Contractor supervisor: _____

Phone or text: _____

We greatly appreciate your patience and cooperation.
Thank you for your support as we continue to improve critical infrastructure in your neighborhood and throughout Kansas City.

KCWATER
www.kcwater.us

KCW-SC-004 (Rev. 11/19)

EXAMPLE
Obtain Template from City

Figure 4 – Wastewater Service Interruption Door Hanger

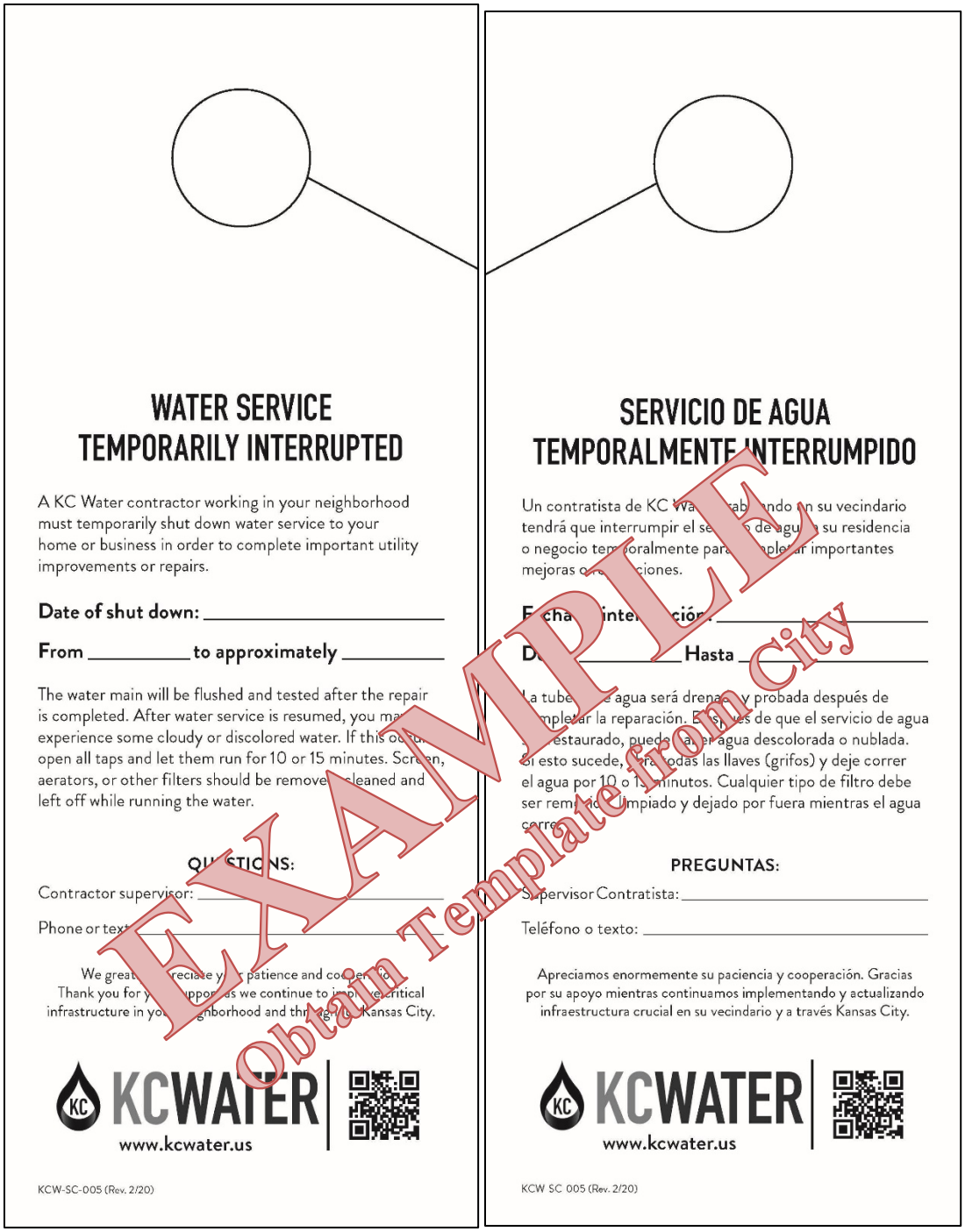

WATER SERVICE
TEMPORARILY INTERRUPTED

A KC Water contractor working in your neighborhood must temporarily shut down water service to your home or business in order to complete important utility improvements or repairs.

Date of shut down: _____

From _____ **to approximately** _____

The water main will be flushed and tested after the repair is completed. After water service is resumed, you may experience some cloudy or discolored water. If this occurs, open all taps and let them run for 10 or 15 minutes. Screens, aerators, or other filters should be removed, cleaned and left off while running the water.

QUESTIONS:

Contractor supervisor: _____

Phone or text: _____

We greatly appreciate your patience and cooperation. Thank you for your support as we continue to improve critical infrastructure in your neighborhood and throughout Kansas City.

KCWATER
www.kcwater.us

KCW-SC-005 (Rev. 2/20)

SERVICIO DE AGUA
TEMPORALMENTE INTERRUMPIDO

Un contratista de KC Water trabajando en su vecindario tendrá que interrumpir el servicio de agua a su residencia o negocio temporalmente para completar importantes mejoras o reparaciones.

Fecha de interrupción: _____

Desde _____ **Hasta** _____

La tubería de agua será drenada y probada después de completar la reparación. Después de que el servicio de agua sea restaurado, puede haber agua descolorada o nublada. Si esto sucede, abra todas las llaves (grifos) y deje correr el agua por 10 o 15 minutos. Cualquier tipo de filtro debe ser removido, limpiado y dejado por fuera mientras el agua corre.

PREGUNTAS:

Supervisor Contratista: _____

Teléfono o texto: _____

Apreciamos enormemente su paciencia y cooperación. Gracias por su apoyo mientras continuamos implementando y actualizando infraestructura crucial en su vecindario y a través Kansas City.

KCWATER
www.kcwater.us

KCW SC 005 (Rev. 2/20)

EXAMPLE
Obtain Template from City

Figure 5 – Water Service Interruption Door Hanger

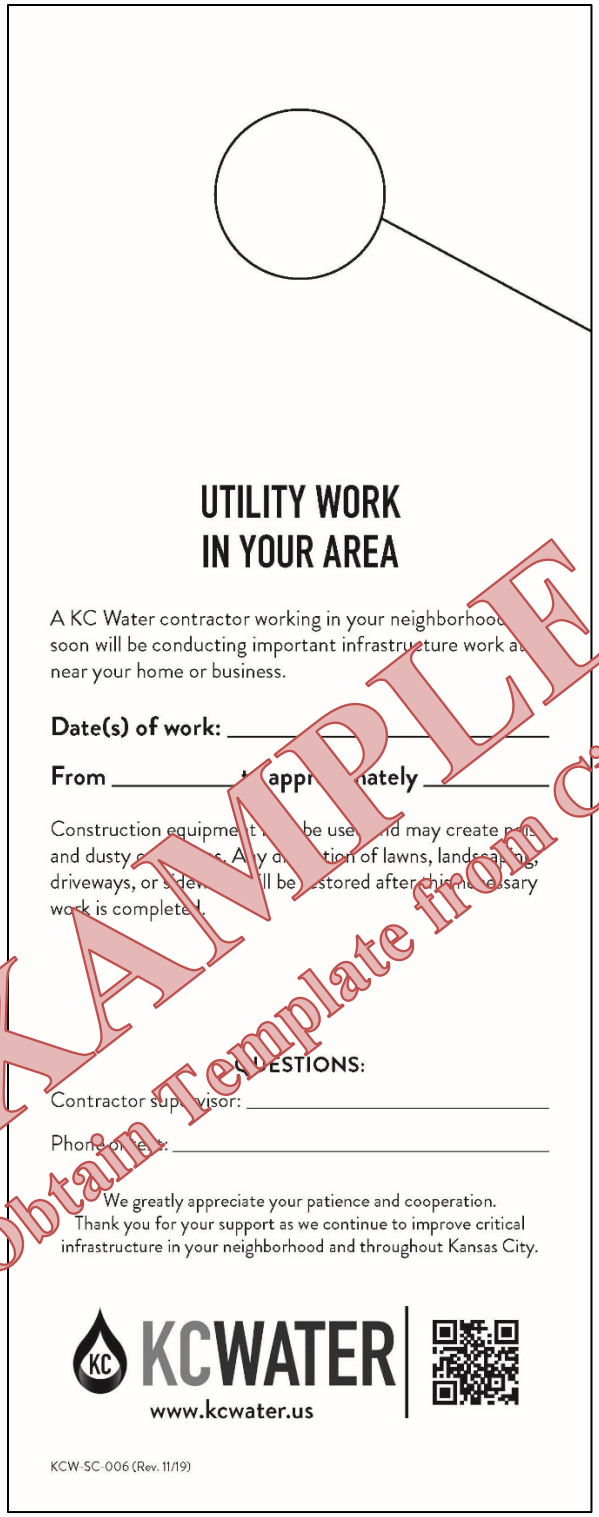

UTILITY WORK
IN YOUR AREA

A KC Water contractor working in your neighborhood soon will be conducting important infrastructure work at near your home or business.

Date(s) of work: _____

From _____ **to approximately** _____

Construction equipment will be used and may create noise and dusty conditions. Any damaged portion of lawns, landscaping, driveways, or sidewalks will be restored after this necessary work is completed.

QUESTIONS:

Contractor supervisor: _____

Phone or text: _____

We greatly appreciate your patience and cooperation.
Thank you for your support as we continue to improve critical infrastructure in your neighborhood and throughout Kansas City.

KCWATER
www.kcwater.us

KCW-SC-006 (Rev. 11/19)

EXAMPLE
Obtain Template from City

Figure 6 – Work Notice Door Hanger

END OF SECTION

CITY OF FOUNTAINS
HEART OF THE NATION

KANSAS CITY
MISSOURI

SUBSTITUTION REQUEST

Project Number _____

Project Title _____

To: _____ Authorization Number: _____
_____ From: _____
Re: _____ Date: _____
_____ Contract For: _____

Specification Title: _____
Section: _____ Page: _____ Article/Paragraph: _____

Proposed Substitution: _____
Manufacturer: _____ Address: _____ Phone No. _____
Trade Name: _____ Model No. _____
Installer: _____ Address: _____ Phone No. _____
History: ❑ New Product ❑ 2-5 years old ❑ 5-10 years old ❑ More than 10 years old
Differences between proposed substitution and specified product: _____
_____
_____

❑ Point-by-point comparative data attached – REQUIRED

Undersigned certifies:

- Proposed substitution has been fully investigated and determined to be equal or superior in all respects to specified product.
- Same warranty will be furnished for proposed substitution as for specified product.
- Same maintenance, service, and availability of replacement parts, as applicable, are available.
- Proposed substitution will not affect or delay Progress Schedule, except as stated below.
- Cost data as stated above is complete. Claims for additional costs related to accepted substitution which may subsequently become apparent are to be waived.
- Proposed substitution does not affect dimensions and functional clearances, except as stated below.
- Payment will be made for changes to building design, including architectural or engineering design, detailing, licenses, royalties, and construction costs caused by the requested substitution.
- Coordination, installation, and changes in the Work as necessary for accepted substitution will be completed in all respects.

Reason for not providing specified item: _____
_____
_____
_____

Similar Installation:
Project: _____ Design Professional: _____
Address: _____ Owner: _____
_____ Date Installed: _____
Proposed substitution affects other parts of Work: ❑ No ❑ Yes; explain _____
_____
_____
Savings to Owner for accepting substitution: _____
Proposed substitution changes Contract Time: ❑ No ❑ Yes; add/deduct _____ days.

Supporting Data Attached:
❑ Product Data ❑ Drawings ❑ Tests ❑ Reports ❑ Samples ❑ _____
Attachments: _____

Submitted by: _____
Signature: _____
Firm: _____
Address: _____

Telephone: _____ Fax: _____ E-Mail: _____

Additional Comments: ❑ Contractor ❑ Subcontractor ❑ Supplier ❑ Manufacturer ❑ DP ❑ _____

DESIGN PROFESSIONAL'S REVIEW AND ACTION

- ❑ Substitution approved – Make submittals in accordance with Specification Section 01300.
- ❑ Substitution approved as noted – Make submittals in accordance with Specification Section 01300.
- ❑ Substitution rejected – Use specified materials.
- ❑ Substitution Request received too late – Use specified materials.

Signed by: _____ Date: _____

Distribution:
- ❑ Owner
- ❑ Design Professional
- ❑ Contractor
- ❑ Consultant
- ❑ Construction Manager
- ❑ Other

SECTION 01700 – TRAFFIC CONTROL

PART 1 - GENERAL

1.01 SUMMARY

A. The Contractor shall provide all materials, labor and equipment (including permits, barricades, cones, drums, construction warning signs, flagmen incidental devices) to protect, warn and guide: vehicular traffic, pedestrian traffic and to protect his personnel and equipment on the site. This specification applies to work being done in conjunction with capital projects and not emergencies or other maintenance related activities.

1.02 SPECIFICATION MODIFICATIONS

A. It is understood that throughout this section these specifications may be modified by appropriate items in Section 01015 – Specific Project Requirements, or as otherwise indicated on the Contract Drawings.

1.03 RELATED SECTIONS

A. Section 01000 – General Project Requirements.
B. Section 01015 – Specific Project Requirements.
C. Section 01300 – Submittals.
D. Section 01581 – Public Communications.

1.04 CODES AND STANDARDS

A. The publications listed below form a part of this specification to the extent referenced. The publications referred to within the specification are by the basic designation only.
B. American Traffic Safety Services Association (ATSSA).
C. "City of Kansas City, Missouri Public Works Department Construction and Material Specifications" (http://kcmo.gov/) (KCMO PW 2305 - Traffic Control – Pedestrian Traffic Control and Sidewalk Closure.)
D. Manual on Uniform Traffic Control Devices (MUTCD).
E. MODOT traffic control and regulations and permits.

1.05 DEFINITIONS

A. City Block – A segment of a street or roadway between two intersections.
B. Working Hours – The Contractor must conduct construction operations in compliance with the City of Kansas City, Missouri Code of Ordinances, Chapter 46 – NOISE CONTROL which generally defines normal working hours as 7:00 am to 6:00 pm on weekdays. Working hours also include any time period approved in writing by the City (see Section 01000 – General Project Requirements, paragraph TEMPORARY ENVIRONMENTAL PROTECTION).
C. Non-Working Hours – Any period of time not defined as Working Hours.
D. Public Works Department – The City of Kansas City, Missouri - Public Works Department.
E. Traffic Control Supervisor – The qualified employee of the Contractor designated to have overall responsibility of the implementation of the Traffic Control Plan, conformance to the Traffic Control Permit and maintenance of traffic control devices.

F. Work Zone – An area of active construction activity along a single street that causes temporary disruption to pedestrian traffic, vehicular traffic, access to properties, or on-street parking.
G. Extended Work Zone – Any work that encompasses more than one city block or street.

1.06 SUBMITTALS

A. Submit as specified in Section 01300 – Submittals.
B. Shop Drawings:
   1. Not applicable.
C. Product Data:
   1. Not applicable.
D. Samples:
   1. Not applicable.
E. Other Submittals:
   1. Traffic Control Plan(s):
      (a) Submit plan(s) directly to the Public Works Department for review and approval as required for permitting. Approval of the traffic control plan is required prior to submitting permit applications.
      (b) Submit the final, approved plan(s) in accordance with Section 01300 – Submittals for informational purposes only.
      (c) Submit changes or revisions to the plans(s) as required by the City's Traffic Control Permit.
      (d) Submit changes or revisions to the Traffic Control Plan necessary for construction phasing.
   2. Traffic Control Permit – submit a copy of the traffic control permit upon approval from the Public Works Department.
   3. Traffic Control Supervisor:
      (a) Submit name, qualifications and contact information in accordance with Section 01300 – Submittals.
      (b) Submit name, qualifications and contact information directly to the Public Works Department.
   4. Public Works Department standard specifications.
   5. Public Works Department standard details.
   6. Maintenance records of traffic control devices.

1.07 GENERAL

A. When the requirements of this section conflict with the requirements of the approved Traffic Control Permit, then the requirements of the Traffic Control Permit shall govern. In all instances, the Contractor shall comply with all KCMO ordinances.
B. The Contractor shall maintain access for pedestrians, vehicles and all properties served by the streets and sidewalks within the site.
C. All work shall be coordinated through the City of Kansas City, Missouri - Public Works Department.
D. Coordination of the traffic control permit shall be conducted during normal business hours (8:00 am through 5:00 pm).

1.08 SPECIFIC PROJECT REQUIREMENTS

A. Specific traffic control requirements are provided in Section 01015 - Specific Project Requirements.

1.09 RESPONSIBILITY

A. The Contractor shall designate a Traffic Control Supervisor having the responsibilities defined in paragraph DEFINTIONS.

B. The Traffic Control Supervisor's name, contact information and qualifications shall be submitted to the City prior to the preconstruction conference.

C. The Traffic Control Supervisor's name and contact information shall be submitted to the Public Works Department as required by the Traffic Control Permit. The contact information provided shall allow the City (Public Works Department) to contact the Traffic Control Supervisor during both working and non-working hours. This information shall be submitted with the application for the Traffic Control Permit and in accordance with paragraph SUBMITTALS.

1.10 SUBMITTAL OF STANDARD DETAILS AND SPECIFICATIONS

A. The Contractor shall obtain a copy of all Public Works Department's standard specifications and details to be used as part of the project. Copies shall be submitted in accordance with paragraph SUBMITTALS.

1.11 ACCESS REQUIREMENTS

A. Unless otherwise stated in Section 01015 – Specific Project Requirements, the Contractor shall maintain access for pedestrians and vehicles to all properties served by streets and sidewalks affected by the Work.

B. Special Restrictions for Extended Work Zones:

1. A maximum of two (2) consecutive city blocks shall be under construction at any one time.
2. Where construction activities cause disruption (i.e. sidewalk closures and/or temporary restriction of on-street parking) to two (2) consecutive city blocks, the following restrictions shall apply:
   (a) At a minimum, pedestrian access shall be maintained on one side of the street only if work can be completed in less than 15 days. Sidewalk closures shall be limited and temporary facilities shall be provided as necessary to allow pedestrian access to all occupied properties affected by construction activities.
   (b) If more than one (1) city block is affected by construction, then construction activities shall be conducted so that on-street parking is maintained on at least one side of the street, on one of the city blocks affected. That is, if on-street parking is eliminated within a city block, the adjacent city block (along the same street) must provide at least on-street parking on one side.
   (c) If a sidewalk will need to be closed more than 15 days, advance approval of the Bike Pedestrian Advisory Committee is required. If a sidewalk closure is planned for more than 15 days in the Greater Downtown Area Plan region, advance approval is required from the Parking and Transportation Commission.

C. Access to adjacent properties served by the street(s) within the project shall be maintained at all times.

D. Traffic shall move through the construction site in accordance with the Traffic Control Permit.

E. When required, flaggers shall coordinate the movement of traffic through the construction site.

F. Temporary Restoration of Access during Non-Working Hours:
   1. All roadways shall be re-opened to traffic in accordance with the Traffic Control Permit or to normal operating conditions (whichever applies) at the end of each work day.
   2. No construction related equipment or material shall be on the roadway outside of normal working hours unless approved by the City (see Section 01000 – General Project Requirements, paragraph CONSTRUCTION SITE PLAN).

1.12 TRAFFIC CONTROL PLAN(S)

A. Unless otherwise indicated on the Drawings or in Section 01015 – Specific Project Conditions, the Contractor shall be responsible for the development and implementation of the Traffic Control Plan necessary to obtain a Traffic Control Permit(s).

B. All costs associated with development, revision or finalization of Traffic Control Plan(s) shall be included in the Contractor's Bid.

C. General Traffic Control requirements shall include but are not limited to the following:
   1. MUTCD requirements shall be maintained on all traffic control plan submittals.
   2. Plans shall clearly identify all traffic control devices to be placed including the location, spacing and other pertinent data required for the traffic control plan reviews.
   3. Plan reviews and resubmittal reviews should be scheduled to be completed with at least two (2) weeks for City staff review on standard traffic control plan submittals. This time may be extended if the plan is complex or of a large volume.
   4. All street typologies listed on the Major Street Plan (https://www.kcmo.gov/city-hall/departments/city-planning-development/other-city-plans) will be required to maintain a minimum of one twelve foot (12') lane in each direction for traffic at all times.
   5. Limited closures on street typologies listed on the Major Street Plan may be allowed but will likely be limited to weeknights and/or weekend work depending on the location of the proposed closure. Full closures may not be possible in some areas of the City.
   6. Electronic Message Boards will be required as part of the communication plan for all lane closures or restrictions on street typologies listed on the Major Street Plan. These signs will need to be in place at least one (1) week prior to the lane closure or restriction and will need to be maintained throughout the closure duration.
   7. Closures in and adjacent to the Streetcar Corridor will be required to have a Track Access Permit.
   8. Residential street traffic control plans will be developed in a way to allow safe travel and maintain access to all properties adjacent to and in the area of the traffic control area.
   9. The Contractor is required to maintain the road surface condition on the haul route to the condition that existed at the time of permit issuance. All damage to the pavement on the haul route caused by the contractor shall be repaired by the contractor at no additional cost to the City.

1.13 TRAFFIC CONTROL PERMIT(S)

A. The Contractor shall not submit Traffic Control Permit applications until the traffic control plan has been approved by the Public Works Department.
B. The Contractor shall obtain a Traffic Control Permit before any construction activity occurs on any City street. Permits shall be obtained and submitted in accordance with Section 01300 – Submittals shall be made no less than two (2) weeks in advance of the construction activity.
C. Specific requirements and the application for Traffic Control Permit can be downloaded from the City's web site at http://kcmo.gov/.
D. The associated permit fees, which may be time and street-type-dependent, are to be obtained from the Public Works Department.
E. All residential, arterial and collector streets require a separate permit and are subject to peak hour restrictions.
F. All costs associated with the Traffic Control Permit(s) shall be included in the Contractor's Bid.

1.14 NOTIFICATIONS

A. Advance notification of affected property owners shall be done in accordance with Section 01581 – Public Communications.
B. Electronic Message Boards are required at least one (1) week in advance of any arterial street closure(s).

PART 2 - PRODUCTS

2.01 TRAFFIC CONTROL DEVICES

A. All traffic control devices shall conform to Part 6 of the "Manual on Uniform Traffic Control Devices" (MUTCD).
B. No substitutions for the devices required by MUTCD or changes in the methods of traffic control as outlined herein will be allowed without written approval of the Director of Public Works or their designee.

PART 3 - EXECUTION

3.01 SAFETY PRECAUTIONS

A. Contractor shall take any and all precautions to guard against injury to persons or damage to property until final acceptance of the work by the City or their representative.
B. Precautions shall include, but not limited to, protection of vehicular and pedestrian traffic from injury or damage due to open excavations, operation of construction equipment, materials storage, etc. by the proper placement of appropriate safety devices.
C. The Contractor shall maintain the safety devices and maintain their proper placement throughout the required period.
D. Construction practices shall be followed that will eliminate all safety hazards.
E. The roadway shall be kept clean and free of construction related debris at all time.

3.02 DEVICE INSTALLATION AND MAINTENANCE

A. Traffic control devices shall be installed and maintained in accordance with KCMO Specification 2305 with the exception that the paragraphs for Method of Measurement and Basis for Payment do not apply.
B. The Contractor shall maintain records of any maintenance required and the date on which it was completed. These records shall be maintained for the duration of the project and submitted in accordance with paragraph SUBMITTALS on a monthly basis.
C. The contractor's designated Traffic Control Supervisor shall make regular workday inspections of the traffic control devices installed as part of Work.
D. It shall be the Contractor's responsibility to maintain all traffic control devices in proper working condition and placement at all times.
E. The Contractor shall immediately correct any deficiencies in traffic control.
F. Any traffic control device not in use shall be covered, removed, or turned away from the view of oncoming traffic.

3.03 CHANGES TO THE TRAFFIC CONTROL PLAN

A. Whenever the work area changes, all construction warning signs and traffic channelization devices shall be made current.
B. The Public Works Department reserves the right to adjust or revise the traffic handling requirements as necessary after construction on the project has started. These changes will be determined based on periodic inspections throughout the duration of the project by both the Water Services and Public Works inspection staff.
C. Notice of such change will be transmitted to the Contractor and it shall be the Contractor's responsibility to make the necessary changes as soon as practicable, but no more than one (1) calendar day, after receipt of the notification. Immediate changes to the traffic control shall be required in situations that are deemed as a public safety matter by the City representatives.
D. If the Contractor encounters conditions that would require a change in method of traffic control, the Contractor shall immediately notify the City's representative. At least 48 hours before the start of the proposed change, the City's representative will request approval of the change in method of maintaining traffic from the Public Works Department. The Contractor shall not proceed with the change without the approval of the Public Works Department.

3.04 PEDESTRIAN TRAFFIC CONTROL

A. Pedestrian traffic control shall conform to KCMO Specification 2305, paragraph-Pedestrian Traffic Control.

3.05 VEHICLE PARKING

A. Parking of construction vehicles, equipment, vehicles of contractor's personnel shall not interfere with public traffic, parking, access by emergency vehicles, or City operations.

3.06 HAUL ROUTES

A. The Contractor shall consult with the City (Water Services Department and Public Works Department) to establish public thoroughfares to be used for haul routes and site access.
B. Residential streets shall not be used as part of the proposed haul routes.

3.07 EMERGENCY CONDITIONS

A. Damage to existing utilities during construction of the Project which requires immediate repair may be considered as an emergency and as such may not be subject to all the restrictions contained herein. These shall be reported to Water Services and Public Works immediately. All subsequent emergency traffic control measures or adjustments shall be coordinated with the City representatives.

B. The Contractor shall immediately contact the utility company whose facilities are involved that may require immediate repair.

C. Such repair work, once declared an emergency by the utility company, shall be pursued on a continuous (24 hours per day) basis until complete or advanced to such a point that use of the roadway can be returned to normal operation and any subsequent repairs can be completed during regular working hours.

D. The City reserves the right to determine which utility work will be considered an emergency. Any costs incurred by the Contractor for such emergency utility repair, including the cost of any additional traffic control that may be required, shall be the Contractor's sole responsibility.

3.08 EMERGENCY NO PARKING SIGNS

A. When it is necessary to eliminate parking on a part of a street to facilitate construction work, the Contractor shall, subject to the approval of the Public Works Department, post "Emergency No Parking" signs.

B. Signs shall be fabricated with the following dimensions, text sizes and include the follow text:

EMERGENCY NO PARKING DAY OR NIGHT	or	**EMERGENCY NO PARKING 7:00 A.M. to 6:00 P.M.**

Placard Height: 24 inches
Placard Width: 18 inches
Placard Color: Silver (reflective)

Lettering Height: 3 inches
Line Spacing: 1.1 inches
Lettering Color: Red

Border Thickness: 0.625 inches
Border Margin from Edge of Placard: 0.375 inches
Border Color: Red

C. The signs shall be made of aluminum, plastic or plywood panels. Paper or cardboard signs are not allowed.

D. The signs shall be installed on either steel drive posts or existing utility poles at a height of five (5) feet to the bottom of the sign.

E. Signs shall be placed on the side of the street where parking is to be eliminated.

F. The signs are to be installed at the beginning and end of each block and at a maximum of 150-feet intervals in between.
G. These signs must be installed a minimum of 18 hours and a maximum of 48 hours in advance of the time the Contractor plans to begin work.
H. The Contractor shall contact the City's representative as soon as the signs are installed. The City's representative will then contact the Public Works Department as soon as the signs are installed, so that a temporary regulation can be written by the Public Works Department and so that the Kansas City, Missouri, Police Department can be notified. The signs cannot be enforced without this notification from the City. The notification to the City must be made by 12 noon for enforcement to be effective the following day.
I. If there are existing parking signs with a lesser degree of restriction, the Contractor shall install the Emergency No Parking signs as outlined above and shall cover the existing signs with the Emergency No Parking sign or some type of semi-permanent cover (paper and tape will not be accepted).
J. The Contractor shall immediately remove the Emergency No Parking signs and all semi-permanent sign covers as soon as work on the block has been completed.
K. If it becomes apparent for any reason that work will cease for more than 72 hours, the same signs and covers shall be removed and must be reinstalled subject to the minimum 18 hours advance-notice before work can proceed.
L. If work does not begin within 48 hours after the signs are posted, the same procedure must be followed. Failure by the Contractor to abide by all the provisions concerning "Emergency No Parking" signs, shall result in the cancellation of the permit.
M. The Contractor shall maintain a minimum of one (1) lane of traffic each direction at all times unless otherwise allowed by permit.
N. The Contractor shall keep residents, schools, businesses, churches and other public entities informed of the work schedule that would interfere with access to their facility. Notification shall be distributed at least 3 weeks in advance of work occurring near a facility.
O. The Contractor shall coordinate with KCATA, as necessary, on proposed lane closures impacting bus travel routes.

END OF SECTION

SECTION 01900 – CONTRACT CLOSEOUT

PART 1 - GENERAL

1.01 SUMMARY

A. This Section includes administrative and procedural requirements for contract closeout.

B. Closeout requirements for specific construction activities are included in the appropriate Sections of the Contract Documents.

1.02 SPECIFICATION MODIFICATIONS

A. It is understood that throughout this Section these Specifications may be modified by appropriate items in Section 01015 – Specific Project Requirements, or as otherwise indicated on the Contract Drawings.

1.03 RELATED SECTIONS

A. Section 00700 – General Conditions.

B. Section 00800 – Supplementary Conditions.

C. Section 01015 – Specific Project Requirements.

D. Section 01020 – Record Documents.

E. Section 01300 – Submittals.

1.04 DEFINITIONS

A. Achievement of Full Operation/Substantial Completion: See Section 00700 – General Conditions, paragraph 1.01.

B. Substantial Completion: See Section 00700 – General Conditions, paragraph 1.01.

1.05 INFORMATION PROVIDED BY THE CITY

A. Achievement of Full Operation or Substantial Completion (Section 00700, paragraph 14.04):

1. If applicable, City will provide written notification that the Work does not meet the requirements for Achievement of Full Operation or Substantial Completion
2. Certification of Achievement of Full Operation (Section 01290.12) or Certificate of or Substantial Completion.
3. Written recommendation as to division of responsibilities pending final payment between City and Contractor with respect to security, operation, safety, protection of the Work, maintenance, heat, utilities, insurance and warranties and guarantees.

B. Partial Utilization (Section 00700, paragraph 14.05):

1. Written request for partial utilization.

C. Punch list (Section 01290.13).

D. Final Inspection (Section 00700, paragraph 14.06):

1. Written report of all in which the Final Inspection reveals that the Work is incomplete or defective.

1.06 SUBMITTALS

A. Submit as specified in Section 01300 – Submittals.

B. Other Submittals:

1. Notification of Achievement of Full Operation or Substantial Complete (Section 00700, paragraph 14.04.A).
2. List of Incomplete Items (Section 00700, paragraph 14.04.A).
3. Notification that the Work is complete and ready for Final Inspection (Section 00700, paragraph 14.06.A).
4. List of Uncompleted Work (paragraph 3.01.C).
5. Certification of Partial Substantial Completion (Section 00700, paragraph 14.05.A.1) if Partial Utilization is requested by City.
6. Closeout Documentation:
   (a) The following items are required to be submitted prior to the Contractor's application for Final Payment as required by Section 00700 – General Conditions, paragraph 14.07:
      (i) Maintenance and Operating Instructions.
      (ii) Schedules.
      (iii) Guarantees.
      (iv) Bonds.
      (v) Certificates or other evidence of insurance.
      (vi) Certificates of inspection.
      (vii) Record Documents (Section 01020 – Record Documents).
   (b) The following items are required to be submitted with the Contractor's application for Final Payment as required by Section 00700 – General Conditions, paragraph 14.07:
      (i) Contractor Affidavit for Final Payment (Section 01290.14).
      (ii) Subcontractor Affidavit for Final Payment (Section 01290.15).
   (c) Authorization to Release a Revenue Clearance Letter (Section 00630).
   (d) All other documentation necessary for an Application for Progress payment (Section 00700, Article 14).
7. Consent of Surety to Make Final Payment certificate.

PART 2 - PRODUCTS

A. Not used.

PART 3 - EXECUTION

3.01 ACHEIVEMENT OF FULL OPERATION / SUBSTANTIAL COMPLETION

A. Refer to Section 00700 – General Conditions, Article 14.

B. Refer to Section 00800 – (Overflow Control Plan Consent Decree) Supplementary Conditions, paragraph SC-14.04 for additional information to define items of the Work to be included in the definition of Achievement of Full Operation or Substantial Completion.

C. List of Uncompleted Items: The Contractor shall submit a list of incomplete items that are required for the Work, but not required for Achievement of Full Operations / Substantial Completion. The list shall include a description of the Work, the value of each item, reasons the work is not complete, and a schedule for completion.

D. The inspection associated with the Achievement of Full Operation / Substantial Completion will be scheduled at a mutually agreed time between the Contractor, Design Professional and the City's Representative.
E. City will provide a punch list (Section 01290.13) of items that require completion or correction. Items noted on the punch list may not be all-inclusive and the failure to include any items on the list does not alter the responsibility of the Contractor to complete all the Work in accordance with the Contract Documents.
F. Items identified in the punch list shall be addressed by the Contractor prior to the Final Inspection.

3.02 PARTIAL UTILIZATION

A. Refer to Section 00700 – General Conditions, paragraph 14.05, Partial Utilization.

3.03 FINAL INSPECTION

A. Refer to Section 00700 – General Conditions, paragraph 14.06, Final Inspection.
B. The Final Inspection will be scheduled at a mutually agreed time between the Contractor, Design Professional and City's Representative.
C. The City will provide the Contractor with the results of the final inspection.
D. If the Work is incomplete or unacceptable, the City will advise the Contractor of Work that is incomplete or other obligations that have not been fulfilled but are required for final acceptance. The Contractor shall address items that need to be corrected, and then request a re-inspection of the Work.
E. Re-inspection of the Work:
   1. If necessary, the City will re-inspect the Work upon receipt of notice that the Work, including punch list items from the first inspection, has been completed, except for items whose completion is delayed under circumstances acceptable to the City.
   2. If necessary, re-inspections will be repeated until all deficiencies have been remedied by the Contractor.

A. Approval of the Work by the City or Design Professional will not relieve the Contractor of their responsibility under other terms of the Contract.

3.04 FINAL PAYMENT

A. After Contractor has completed all corrections (after the Final Inspection) to the satisfaction of City, Contractor shall submit the Final Payment request. Refer to Section 00700 – General Conditions, paragraph 14.07, Final Payment.
B. Documents to be submitted with, or prior to, the application for final payment shall be as required by the Contract Documents. See paragraph 1.06 for a summary.
C. Authorization to Release a Revenue Clearance Letter: If the Contract exceeds $160,000 and if Work is performed for a term longer than one (1) year, then in addition to the requirements of Section 00700, the Application for Final Payment shall be accompanied by a clearance letter from the Finance Department, Revenue Division. The Contractor shall keep a copy of all subcontractors' clearance letters in its contract files in accordance with the contract documents. See Section 00630.
D. For Contracts that include a Green Infrastructure Establishment Period, there will be a Final Payment for the Work associated with construction, and a separate Final Payment for the Work associated with the maintenance of green infrastructure through the establishment period. The Final Payment for Work associated with construction shall exclude the amount for maintenance of green infrastructure indicated in the Schedule of Values.

3.05 LIQUIDATED DAMAGES

A. If required, liquidated damages shall be assessed in accordance with the Contract Documents. Refer to Section 00700 – General Conditions, paragraph 12.01 and Section 00800. See Supplementary Conditions, paragraph SC-12.01 for additional information.

END OF SECTION

SECTION 02200 – EARTHWORK

PART 1 - GENERAL

1.01 SUMMARY

A. This section covers earthwork associated with general excavation, backfill and compaction required for the Work.

B. This section also covers the handling, storage, transportation and disposal of all excavated material; sheeting and shoring, subgrade preparation, dewatering as necessary or required, protection of adjacent property, construction of fills and embankments, surfacing and grading; and other appurtenant work.

C. Additional requirements for excavation, backfill and compaction for trenching can be found in Section 02250 – Trenching, Pipe Embedment and Backfill.

1.02 SPECIFICATION MODIFICATIONS

A. It is understood that throughout this section these Specifications may be modified by appropriate items in Section 01015 – Specific Project Requirements or as otherwise indicated on the Contract Drawings.

1.03 RELATED SECTIONS

A. Section 00700 – General Conditions.
B. Section 01000 – General Project Requirements.
C. Section 01015 – Specific Project Requirements.
D. Section 02180 – Clearing and Grubbing.
E. Section 02190 – Demolition.
F. Section 02250 – Trenching, Pipe Embedment and Backfill.
G. Section 02230 – Geotextiles.
H. Section 02930 – Seeding.
I. Section 02931 – Sodding.

1.04 CODES AND STANDARDS

A. The publications listed below form a part of this specification to the extent referenced. The publications are referred to within the text by the basic designation only.

B. American Society for Testing and Materials (ASTM):

ASTM D698	Standard Test Methods for Laboratory Compaction Characteristics of Soils Using Standard Effort (12,400 ft-lbf/ft3).
ASTM D1556	Standard Test Method for Density and Unit Weight of Soil in Place by Sand-Cone Method.
ASTM D2167	Standard Test Method for Density and Unit Weight of Soil in Place by the Rubber Balloon Method.
ASTM D4318	Standard Test Methods for Liquid Limit, Plastic Limit and Plasticity Index of Soils.
ASTM D4546	Standard Test Method for One-Dimensional Swell or Collapse of Soils.
ASTM D6938	Standard Test Method for In-Place Density and Water Content of Soil and Soil-Aggregate by Nuclear Methods (Shallow Depth).

C. City of Kansas City, Missouri Department of Public Works, Construction and Material Specifications (http://kcmo.gov/publicworks/design-construction-standards/) KCMO PW 2202, Subsection 2202, Untreated Compacted Aggregate.
D. Kansas Department of Transportation, Standard Specification and Construction Manual, Division 1100, Aggregates.
E. Missouri Department of Transportation, Missouri Standard Specifications for Highway Construction, Division 1000, Materials Details.

1.05 DEFINITIONS

A. Paved Areas – Areas for which the final surfacing will be street pavement, shoulders, driveways, parking lots, curbs, gutters, sidewalks, gravel roads or other surface features.
B. Unpaved Areas – Areas for which the final surfacing will be in a green space.

1.06 INFORMATION PROVIDED BY THE CITY

A. As provided in the Contract Documents.

1.07 SUBMITTALS

A. Submit as specified in Section 01300 – Submittals.
B. Shop Drawings:
   1. Sheeting and Shoring Plan – Prior to excavation, the Contractor shall submit a shoring design that is signed and sealed by a registered professional engineer in the State of Missouri for all excavations greater than twenty (20) feet in depth (in accordance with 29 CFR Past 1926 - OHSA Subpart P - Excavations and Trenches). Submittal will be for informational purposes only.
C. Testing Reports:
   1. Laboratory testing results for proposed Borrow Materials.
   2. Laboratory testing results and quarry control reports for Granular Material.
   3. Laboratory testing results for and quarry control reports Granular Bedding.
   4. Moisture-density (Proctor) test results.
   5. In-Place Density test results.
D. Other Submittals:
   1. Commercial Laboratory – submit name, contact information and certification of the commercial testing laboratory required by paragraph 1.08.
   2. Blasting (as applicable):
      (a) Pre-blast survey.
      (b) Monitoring Plan.
      (c) Permit for blasting.
      (d) Post-blast survey.

1.08 QUALITY ASSURANCE

A. The Contractor is responsible for the quality assurance and quality control of the Work.
B. Sampling and Testing:
   1. Tests to determine conformance with all requirements of this Specification for quality and properties of all Contractor-secured materials, including borrow materials proposed for use, shall be performed by an independent, state-certified, commercial laboratory retained and compensated by the Contractor and approved by the City/Design Professional.

2. All work associated with QUALITY ASSURANCE shall be included in the Bid Price and will be incidental to the Work. No separate measurement or payment will be made.

1.09 PRODUCT DELIVERY, STORAGE AND HANDLING

A. The City will furnish the Site in accordance with Section 00700 – General Conditions.
B. See Section 01000 – General Project Requirements, paragraph EASEMENTS AND RIGHT-OF-WAY for use of private property for delivery, storage and handling.
C. Perform in a manner to prevent contamination or segregation of materials.

1.10 EXISTING UTILITES

A. The Contractor shall notify utilities prior to excavation in accordance with Section 00700 – General Conditions, Article 6 – Contractor's Responsibilities, paragraph NOTIFICATION OF ULTILITIES.
B. Movement of construction machinery and equipment over pipes and utilities during construction is at the Contractor's sole risk.
C. For work immediately adjacent to or for excavations exposing a utility or other buried obstruction, excavate by hand, start hand excavation on each side of the indicated obstruction and continue until the obstruction is uncovered or until clearance for the new grade is assured.
D. Support uncovered lines or other existing work affected by the excavation until approval for backfill is granted by the City.
E. Report damage to utility lines or subsurface construction immediately to the City.

PART 2 - PRODUCTS

2.01 MATERIALS ENCOUNTERED

A. Suitable Materials – Materials suitable for use in backfill, fill and embankment include job excavated or borrow material that is free of debris, roots, organic matter, frozen matter and shale particles/rock/stone or gravel with all dimensions less than 2 inches:
   1. Cohesion-less materials include gravels, gravel-sand mixtures, sands and gravelly sands; generally exclusive of clayey and silty material with the following properties:
      (a) Free-draining.
      (b) Impact compaction will not produce a well-defined moisture-density relationship curve.
      (c) Maximum density by impact methods will generally be less than by vibratory methods.
      (d) Generally less than 15% by dry weight of soil particles pass a No. 200 sieve.
   2. Cohesive materials include materials made up predominately of silts and clays generally exclusive of sands and gravel with the following properties:
      (a) Impact compaction will produce a well-defined moisture-density relationship curve.
      (b) Are not free draining.
B. Unsuitable Materials – Materials unsuitable for use in backfill, fill and embankment include all material that contains debris, roots, organic matter, frozen matter, shale particles/rock/stone or gravel with any dimension greater than 2 inches.

Additionally, as determined by the City/Design Professional, any other materials that are too wet or otherwise unsuitable for providing a stable subgrade or stable foundation for structures or trenches.

C. Material used for embankment or fill:
   1. For soils used below structural elements (such as: footings, slabs, pavements and mats), the portion of material passing the No. 40 sieve shall have a liquid limit not exceeding 40 and a plasticity index not exceeding 25 when tested in accordance with ASTM D4318.

2.02 TOPSOIL

A. On-Site Topsoil – Surface soil stripped and stockpiled on site and modified as necessary to meet the requirements specified herein. When available, topsoil must be existing surface soil stripped and stockpiled on the Site.

B. Off-Site Topsoil – Conform to requirements specified herein. Additional topsoil must be furnished by the Contractor.

C. Composition – Natural, friable soil representative of productive, well-drained soils in the area, free of subsoil, stumps, rocks larger than 1- inch diameter, brush, weeds, toxic substances and other material detrimental to plant growth. Amend topsoil pH range to obtain a pH of 5.5 to 7.

D. Topsoil shall be of a quality at least equal to the existing topsoil in adjacent areas, free from trash, stones, debris and well suited to support plant growth.

2.03 SOIL CONDITIONS

A. All Materials encountered, regardless of type, character composition and condition shall be considered "unclassified" for the purpose of payment. Determine quantity of various materials to be excavated prior to submitting Bid. Rock encountered shall be handled at no extra cost to City.

2.04 WASTE MATERIALS

A. Waste materials, as described for purposes of this Section, consist of unsuitable materials such as: rock, surplus excavated material, demolition debris and other materials considered unacceptable for use as fill.

B. Waste materials shall not include environmental pollutants, hazardous substances, contaminated products, by-products, samples or waste materials of any kind that are regulated under environmental laws.

C. Dispose of Demolition Debris in accordance with Section 02190 – Demolition. Dispose of other waste materials in accordance with Paragraph DISPOSAL OF EXCAVATED MATERIALS.

2.05 BORROW MATERIALS

A. Suitable fill materials, granular materials and topsoil obtained from locations arranged for by Contractor (off the Site) are required to the extent sufficient suitable materials cannot be obtained from excavation and trenching.

B. Borrow materials shall not exhibit characteristics of high shrink or swell potential as determined from Atterberg limit tests (ASTM D4318) and/or swell tests (ASTM D4546) unless otherwise specified herein.

2.06 GRANULAR FILL MATERIAL

A. Granular fill material shall consist of crushed stone, sand and gravel or reclaimed asphalt or concrete. The aggregate shall not contain more than 15 percent deleterious

rock and shale. The fraction passing the No. 40 sieve shall have a plasticity index not to exceed six. Any sand, silt, clay and any deleterious rock and shale shall be uniformly distributed throughout the material.

B. Reclaimed asphalt or concrete materials meeting the requirements of aggregate must be approved for use by the City.

C. Granular fill material shall be in accordance with the following gradation requirements defined in Table 1 below:

Table 1. Gradation for Granular Fill Material

Sieve Size	Mass Percent Passing		
	MoDOT Type 5	**KDOT Type AB-3**	**KCMO PW 2202****
2 inch		100	
1 ½ inch		95 to 100	
1 ¼ inch			100
1 inch	100		72 to 100
¾ inch		70 to 95	60 to 90
½ inch	60 to 90		
3/8 inch			43 to 74
No. 4	35 to 60	40 to 65	28 to 60
No. 8		30 to 55	
No. 10			16 to 40
No. 30	10-35		
No. 40		16 to 40	3 to 22
No. 200	0-15	8 to 20*	0 to 15**

* For Type AB-3, the fraction passing the No. 200 sieve shall not exceed ¾ of the fraction passing the No. 40 sieve.

** For KCMO PW 2200, the difference between Mass Percent Passing of successive sieve sizes shall not exceed 25%. That fraction of material passing the No. 40 sieve shall have a plasticity index not to exceed 8.

1. MoDOT Type 5 material shall conform to Missouri Department of Transportation, Standard Specifications for Highway Construction, Section 1007, Type 5 Aggregate.
2. KDOT Type AB-3 material shall conform to Kansas Department of Transportation, Standard Specification and Construction Manual, Division 1100, Aggregates.

2.07 GEOTEXTILE

A. Geotextile shall conform to the requirements of Section 02230 – Geotextiles.

2.08 CONTROLLED LOW STRENGTH MATERIAL (CLSM)

A. See Section 02250 – Trenching, Pipe Embedment and Backfill.

PART 3 - EXECUTION

3.01 DEMOLITION

A. Demolition shall be conducted in accordance with Section 02190 – Demolition.

3.02 CLEARING AND GRUBBING

A. Perform clearing and grubbing, in accordance with Section 02180 – Clearing and Grubbing, as indicated and as required to perform the Work.

3.03 STRIPPING

A. Stripping shall consist of scraping areas clean of all brush, grass, weeds, roots and other materials.
B. Remove topsoil from areas within limits of excavation, trenching, borrow and areas designated to receive fill.
C. Strip to a minimum depth of 6 inches, but to a sufficient depth to remove excessive roots in heavy vegetation, unsuitable material or brush areas and as required to remove all soil containing organic material or segregate topsoil.
D. Stockpile topsoil in areas designated or approved by the City/Design Professional where it will not interfere with construction operations or existing facilities. Stabilize and protect stockpiles from runoff per the SWPPP plan.

3.04 GENERAL REQUIREMENTS FOR OPEN EXCAVATIONS

A. Excavations shall be restored to the level of the adjacent surfaces as soon as practicable.
B. Unsupervised or unprotected excavations are prohibited. The Contractor shall adhere to the City's no open excavation policy.
C. Protective Measures in Paved Areas:
    1. Excavations within paved areas shall be protected and secured in accordance with existing federal, state and local codes and standards. This includes, but not limited to, the most current edition of the Manual of Uniform Traffic Control Devices.
D. Protective Measures Unpaved Areas:
    1. Supervision – As a temporary measure, the Contractor may provide personnel to supervise an open excavation that is not otherwise protected. Supervision shall ensure that the public is protected and shall serve the same function as a protective cover or fencing. A protective cover or fencing shall be installed for all excavations that are not supervised.
    2. Protective Cover – A protective cover shall be installed over the excavation so that it can sustain the weight of any persons and/or objects placed upon it. The cover shall be of sufficient weight or fixed to the ground so it cannot be moved. Protective covers shall have no opening(s) or protuberance(s) of sufficient size to cause a fall or injury. Advance warning devices shall be installed as required by the City/Design Professional.
    3. Fencing – Any excavation that is not covered shall be fenced in so that it surrounds the entire excavation area and prevents entry. The fencing shall be a minimum of 42 inches in height. The fence shall be secured and upright at all times.
E. Inspection and Maintenance – Protective measures (coverings and fences) shall be inspected by the Contractor at least daily to assure integrity. Protective measures in heavy traffic areas shall be inspected more often as necessary.

F. Excavation permits shall be secured prior to starting the work.

3.05 EXCAVATION

A. Excavations shall provide adequate working space and clearances for the work to be performed therein and for installation and removal of concrete forms.
B. In no case shall excavation faces be undercut for extended footings.
C. Subgrade surfaces shall be clean and free of loose material of any kind when concrete is placed thereon.
D. Classification of Excavated Materials – No classification of excavated materials will be made. Excavation and trenching work shall include the removal and subsequent handling of all materials excavated or otherwise removed in performance of the work, regardless of the type, character, composition or condition thereof.

3.06 BLASTING

A. Unless otherwise noted in Section 01015 – Specific Project Requirements, blasting or other use of explosives for excavation will not be permitted
B. If allowed, blasting shall conform to all applicable ordinances, rules, regulations, permit requirements including Kansas City, Missouri Ordinance 180591 and the Missouri Blasting and Safety Act.
C. Contractor shall provide a plan for pre-blast surveys, monitoring during blasting and post blast surveys to City prior to use of explosives.
D. All existing safety regulations, permits, laws and ordinances regarding the storage, transportation and use of explosives shall be observed.
E. Blasting will be permitted only when proper precautions are taken for the protection of all persons, the work, private property and public utilities from damage or injury. Any damage done by blasting will be repaired by the Contractor at no additional cost to the City.

3.07 DEWATERING

A. Dewatering equipment shall be provided to remove and dispose of all surface water and groundwater entering excavations, trenches or other parts of the Work.
B. To prevent damage from hydrostatic pressure, flotation or other cause, all excavations shall be protected and kept dry during subgrade preparation and continually thereafter until the structure is built or the pipe is installed and the area is backfilled.
C. All excavations for concrete structures or trenches which extend down to or below groundwater shall be dewatered by lowering and keeping the groundwater level beneath such excavations 12 inches or more below the bottom of the excavation.
D. Surface water shall be diverted or otherwise prevented from entering excavations or trenches to the greatest extent possible without causing damage to adjacent property.
E. If the material within the excavation becomes unsuitable or unstable as a result of the Contractor's inability to implement adequate surface diversion or dewatering measures, then the Contractor shall remove unsuitable materials and replace with approved compacted fill material as directed by City and at no additional cost to the City.
F. Surface water and groundwater that contains silt and soil shall not be disposed of without pre-treatment.
G. The Contractor is responsible for the condition of any pipe, conduit or drainage way which is utilized for drainage purposes. Any such pipe, conduit or drainage way utilized shall be left clean and free of sediment.

3.08 SHEETING AND SHORING

A. The Contractor shall provide all shoring, bracing, cribbing, trench boxes, underpinning and sheeting as necessary to support excavations.

B. The Contractor shall provide a Sheeting and Shoring Plan that includes provisions that will accomplish the following:

1. Prevent undermining of pavements, foundations and slabs.
2. Prevent slippage or movement in banks or slopes adjacent to the excavation.
3. Allow for the abandonment of shoring and sheeting materials in place in critical areas as the Work is completed. In these areas, backfill the excavation to within 3 feet of the finished grade and remove the remaining exposed portion of the shoring before completing the backfill.
4. Except where banks are cut back on a stable slope, excavations for structures shall be supported as necessary to prevent caving or sliding.
5. Excavations shall provide adequate working space and clearances for the Work to be performed.
6. Undercutting of excavation faces is prohibited.

3.09 BACKFILL AND COMPACTION

A. See Section 02250 – Trenching, Pipe Embedment and Backfill for additional requirements.

B. Fills and embankments shall be constructed to the lines and grades indicated on the Drawings, using suitable material or as specified in Section 01015 – Specific Project Requirements.

C. Weather Limitations – Construction of fills and embankments during freezing weather shall not be done except by permission of the City/Design Professional. No fill or embankment materials shall be installed on frozen surfaces, nor shall froze material, snow or ice be placed in the fill or embankment.

D. To the extent possible, excess suitable material obtained from trench excavation can be used for the construction of fills and embankments. Additional material shall be provided as required.

E. After preparation of the fill or embankment site, the subgrade shall be leveled and rolled so that surface materials of the subgrade will be compacted and well bonded with the first layer of the fill or embankment and for subsequent layers.

F. All fill and embankment materials shall be placed in layers not to exceed 8 inches in un-compacted thickness.

G. Material deposited in piles or rows by excavating and hauling equipment shall be spread and leveled before compacting.

H. No shale particles, rock, gravel or stone with any dimension greater than 2 inches shall be placed in the upper 18 inches of any fill or embankment. Rocks or stones within the allowable size limit may be incorporated in the remainder of fills and embankments, provided they are distributed so that they do not interfere with proper compaction.

I. The material in each layer shall be wetted or dried as required and thoroughly mixed to ensure uniform moisture content and adequate compaction. Each layer shall be thoroughly compacted as follows:

1. Unpaved Areas:
   (a) 90% of maximum dry density at moisture content range from 3% below optimum to 2% above optimum as determined by ASTM D698.
   (b) If the material fails to meet the density specified, compaction methods shall be altered.

2. Paved Areas:
   (a) All subgrades below paved area and within 1 foot of a paved areas shall be compacted to 95% of maximum dry density at moisture content range from 3% below optimum to 2% above optimum as determined by ASTM D698 for the subgrade 1 foot outside of paved areas.
   (b) If the material fails to meet the density specified, compaction methods shall be altered.
3. Project specific requirements for backfill and compaction may be modified in Section 01015 – Specific Project Requirements.

J. Trenches in Embankments – Wherever a trench is to pass through a fill or embankment, the fill or embankment material shall be placed and compacted to an elevation not less than 36 inches above the top of pipe elevation before the trench is re-excavated.

K. Unless otherwise specified in Section 01015 – Specific Project Requirements, trenches and pipes that pass through a water-containing embankment shall eliminate the granular embedment material and the trench bottom shall be graded to provide uniform and continuous support for the pipe. The pipe shall be embedded in embankment material containing no rocks, stones or other pervious material. The embedment material shall be compacted as specified for the embankment.

3.10 GRANULAR FILLS

A. See Section 02250 – Trenching, Pipe Embedment and Backfill for additional requirements.

B. Granular fill material shall be provided where indicated on the drawings.

C. Granular fill material shall be placed on suitably prepared subgrades and compacted by vibration.

D. Backfill and Compaction – The material in each layer shall be wetted or dried as required and thoroughly mixed to ensure uniform moisture content and adequate compaction. Each layer shall be thoroughly compacted with a vibratory compactor to 95% of maximum dry density at moisture content range from 3% below optimum to 2% above optimum as determined by ASTM D698.

E. If the material fails to meet the density specified, compaction methods shall be altered.

F. Where granular fills are to be covered with concrete, the top surface shall be graded to the required subgrade.

3.11 FIELD QUALITY CONTROL

A. See Section 02250 – Trenching, Pipe Embedment and Backfill for additional requirements.

B. Compaction Tests:
   1. Two initial gradation tests shall be made for each type of embedment, fill and backfill material used and one additional gradation test shall be made for each additional 500 tons of each material. At the sole expense of the Contractor, moisture-density (Proctor) tests, relative density tests on the materials and all in-place field density tests shall be performed by the Contractor. All tests performed shall be done in accordance with ASTM D698.
   2. The method of in-place compaction testing including density and moisture content shall be as follows:

(a) Density - Cohesive materials: ASTM D2167, ASTM D1556 or ASTM D6938.
(b) Density - Cohesion-less materials: ASTM D6938.
(c) Moisture Content: ASTM D6938.

3. The minimum frequency of in-place compaction testing including density and moisture content will be as follows:
   (a) At least one test for every 2,000 cubic yards of material placed in a mass fill.
   (b) At least one test when the City suspects the quality of moisture control or effectiveness of compaction.
4. Any material/fill failing to meet required densities shall be removed, replaced and compacted as necessary to achieve specified results.
5. Removal of in-place material and replacement with approved new material will be required if scarifying and re-compaction do not produce the required densities.

3.12 EQUIPMENT

A. The Contractor shall utilize appropriate equipment to obtain the compaction requirements specified. Acceptable equipment includes, but is not limited to, the following:
   1. Tamping Rollers.
   2. Pneumatic Rollers.
   3. Vibratory Rollers.
   4. Other methods that have been tested and have been shown to meet the specified compaction rates.

B. Power tampers or rammers shall be used for the compaction of material in areas where it is impractical or unsafe to use heavy equipment or as recommended by the City.

C. Vibratory plate compactors, manual or attached to excavation equipment, may be used for consolidation of embedment and compaction of granular fill in areas where it is impractical or unsafe to use heavy equipment or as recommended by the City.

D. All compaction equipment is subject to the approval of the City/Design Professional.

3.13 FINAL GRADING AND PLACEMENT OF TOPSOIL

A. After all trenching, backfilling, compaction and embankments to be constructed have been rough graded, all areas shall be final graded to the indicated elevations, slopes and contours.

B. All cuts, fills, embankments and other areas which have been disturbed or damaged by construction operations shall be surfaced with at least 6 inches of topsoil to meet final grade.

C. Use of graders or other power equipment will be permitted for final grading and dressing slopes, provided the result is uniform and equivalent to manual methods.

D. All surfaces shall be graded to provide effective drainage. Unless otherwise indicated, a slope of at least 1 percent shall be provided.

E. Final grade shall be smooth, even and free from clods, rocks, stones, weeds, brush and other debris.

3.14 DISPOSAL OF EXCESS EXCAVATED MATERIALS

A. Except as otherwise permitted, all excess excavated materials shall be disposed of off-site.

B. Demolition Debris, see Section 02190 – Demolition.

C. Rock – Excavated rock in excess of the amount permitted to be installed in trench backfill (see Section 02250 – Trenching, Pipe Embedment and Backfill) shall be disposed of off-site.
D. Other Debris – Waste material and other debris encountered in during excavation shall be disposed of off-site.
E. The disposal of waste and surplus excavated materials, including hauling, handling and grading is incidental to Earthwork. No separate measurement or payment shall be made.

3.15 SEEDING AND SODDING

A. All areas disturbed by the Contractor's operations shall be seeded or sodded according to the requirements of Section 02930 – Seeding or Section 02931-Sodding.

3.16 SETTLEMENT

A. The Contractor is solely responsible for all settlement which may occur within the correction period (as stipulated in the General Conditions and Supplementary Conditions). Within 30 days after notice from the City, the Contractor shall make all settlement repairs and the associated restoration caused by correcting the settlement.

END OF SECTION

SECTION 02233 - TREE/SHRUB REMOVAL AND REPLACEMENT

PART 1 GENERAL

1. The CONTRACTOR is to use appropriate precautions when working around trees and shrubs to prevent any damages to them. The CONTRACTOR will be responsible for any damage caused by careless or reckless work in the vicinity of any trees or shrubs along the project. All damages to trees are to be reported, and immediate repair or care efforts will be coordinated with the Kansas City Parks Department, and the Owner's Representative.

2. The CONTRACTOR shall notify the residents of the impending construction start date so that they may have ample time to relocate any favored plants, shrubs, or ornamental objects. Notification shall be at least one week in advance of any construction that will affect their property.

PART 2 TREE/SHRUB REMOVAL AND REPLACEMENT

1. All existing trees within the permanent standard sewer easements shall be removed if approved by the Water Services Department.

2. The CONTRACTOR may trim or remove other trees only if determined necessary by the engineer at the time of construction.

3. Replacement tree/shrub shall be of like kind and of nursery stock size, minimum two-inch trunk diameter two (2) feet above top of ball. Replacement trees shall be planted outside the permanent easement at a location determined by the engineer and the property owner.

4. Trees shall be completely removed with stump ground down to a minimum depth of six (6) inches below the plan grade.

5. Shrubs shall be completely removed.

6. Organic materials removed shall be disposed off site.

PART 3 PAYMENT

No separate payment will be made for this item. All costs pertaining thereto shall be included in the bid. All costs pertaining to supply, delivery and storage, site preparation, watering, protection, and installation shall be included in bid.

End of Section

SECTION 02503 – SEWER MAINLINE OPEN-CUT POINT REPAIR

PART 1 - GENERAL

1.1 SUMMARY

This section applies to the open-cut point repair of a public sewer which lies within public rights-of-way or in utility easements under the control of the City for sewer purposes.

1.2 RELATED SECTIONS

A. Section 01000 – General Project Requirements.
B. Section 01300 – Submittals.
C. Section 02200 – Earthwork.
D. Section 02250 – Trenching, Pipe Embedment and Backfill.
E. Section 02575 – Surface Restoration.
F. Section 02620 – Ductile Iron Pipe for Sewers.
G. Section 02624 – Polyvinyl Chloride (PVC) Gravity Sewer Pipe.

1.3 CODES AND STANDARDS

A. The publications listed below form a part of this specification to the extent referenced. The publications are referred to within the text by the basic designation only.
B. American Society for Testing and Materials (ASTM):

A746	Standard Specification for Ductile Iron Gravity Sewer Pipe.
C425	Standard specification for compression joints for VCP.
C1173-18	Standard specification for flexible transition couplings for underground piping systems.
D16	Standard Terminology for Paint, Related Coatings, Materials, and Applications.
D1784	Standard Specification for Rigid Polyvinyl Chloride (PVC) Compounds and Chlorinated Polyvinyl Chloride (CPVC) Compounds.
D2241	Standard Specification for Polyvinyl Chloride (PVC) Pressure Rated Pipe (SDR Series).
D2412	Standard Test Method for Determination of External Loading Characteristics of Plastic Pipe by Parallel Plate Loading.
D3034	Standard Specification for Type PSM Polyvinyl Chloride (PVC) Solid Wall Sewer Pipe and Fittings.
D3212	Standard Specification for Joints for Drain and Sewer Plastic Pipes Using Flexible Elastomeric Seals.
E329	Standard Specification for Agencies Engaged in the Testing and/or Inspection of Materials Used in Construction.
F477	Standard Specification for Elastomeric Seals (Gaskets) for Joining Plastic Pipe.
F679	Standard Specification for Poly Vinyl Chloride (PVC) Large Diameter Plastic Gravity Sewer Pipe and Fittings.

1.4 SUBMITTALS

A. Drawings, specifications, and data covering the proposed materials shall be submitted to the City in accordance with Section 01300 - Submittals. The Contractor shall submit the following to the City for review and approval:
   1. Pipe, fittings and couplings.
   2. Information on gasket polymer properties.
   3. Application methods, application requirements and chemical resistance data for all products furnished.
   4. Manufacturer's Certificate of Compliance.
   5. Pipe embedment, backfill, materials and sub-contractor used for site restoration.
   6. CCTV Inspection Equipment: Submit minimum 15 days prior to performing inspections:
      a. Name and qualifications of inspection firm.
      b. Brand name and model number of video equipment to be used.
   7. CCTV inspection video and inspection logs. Video shall become property of the City.
   8. Permits:
      a. The Contractor shall obtain all necessary permits and licenses required to perform the Work.

1.5 DEFINITIONS

A. ANSI: American National Standards Institute.
B. ASTM: American Society for Testing and Materials.
C. AWWA: American Water Works Association.
D. CCTV: Closed Circuit Television.
E. DIP: Ductile Iron Pipe.
F. PVC: Poly Vinyl Chloride.
G. SDR: Standard Dimension Ratio.

1.6 QUALITY ASSURANCE

A. The Contractor is responsible for the quality assurance and quality control of the Work.
B. All Work shall be performed by a Contractor with a proven record of performance for similar installations. Contractor shall submit the following:
   1. CCTV Inspection Company must have actively performed such services for minimum of 2 years.
   2. Warranty Terms and Period: Contractor's warranty period shall be three (3) years for the performance and maintenance of the work performed.

1.7 PRODUCT DELIVERY, STORAGE AND HANDLING

A. Packaging, handling, delivery and storage of materials shall be done in accordance with this Section, the manufacturer's recommendations and in accordance with Section 01000 – General Project Requirements.
B. Delivery of materials shall be in manufacturer's original unopened and undamaged packages. Materials shall be clearly marked to identify brand name and contents on each package. Packages showing signs of damage that may affect the condition of the contents are not acceptable.

PART 2 - PRODUCTS

2.1 MATERIALS

A. Pipe:
   1. Approved pipe materials are: polyvinyl chloride (PVC) or ductile iron pipe (DIP).
   2. Pipe materials other than those listed above shall not be used for sanitary sewers unless otherwise approved by the City.
   3. General requirements:
      a. Ductile Iron Pipe (DIP) shall conform to Section 02620 – Ductile Iron Pipe for Sewers.
      b. Polyvinyl Chloride (PVC) pipe shall conform to Section 02624 – Polyvinyl Chloride (PVC) Gravity Sewer Pipe.

B. Fittings:
   a. All fittings shall be factory-produced and shall be designed for installation on the pipe to be used. Fittings shall be of the same quality and material as the pipe used.
   b. Couplings for point repairs:
      i. All couplings shall form tight compression joints.
      ii. When connecting to the existing sanitary sewer, the Contractor shall use Non-Shear Fernco Strongback 5000 series couplings, MaxAdaptor couplings or City approved equal.

PART 3 - EXECUTION

3.1 SAFETY

A. All work shall be performed in accordance with applicable OSHA standards.

3.2 PREPARATION

A. Contractor shall clear the work area required for excavation in accordance with Section 02200 – Earthwork. It is the Contractor's responsibility to provide a photo or video log of the work zone(s) and to protect and restore the area to a condition as good as or better than it was before the Work was started. All removed fences; shrubbery, sidewalks, planters and landscaping shall be restored utilizing new materials unless otherwise directed in writing by both the Owner/Occupant and the City.

B. Existing Utilities:
   1. The Contractor is responsible for protecting all utilities. All permits and licenses required for the execution of the Work shall be obtained by the Contractor.
   2. The Contractor shall notify all utilities at least 48 hours in advance before making excavation in accordance with Missouri State Law.
   3. When water mains or water service lines exist in the area, the Contractor shall comply with all applicable rules and regulations of the Kansas City, Missouri Water Services Department and the Code of State Regulations.

3.3 INSTALLATION

A. General Construction Requirements:
   1. Open cut point repairs on a sanitary sewer shall be done in accordance with drawing 02503-1 and as described herein.

B. Excavation:
   1. Excavation required for sanitary sewers shall be done in accordance with Section 02200 – Earthwork except as modified herein.
   2. Width of Trench: The width of trench at the top of a pipe shall not exceed the outside diameter of the pipe plus eighteen (18) inches.
   3. Sheeting, Shoring and Bracing: The Contractor shall do all necessary trench bracing, shoring, or sheeting to prevent slides or cave-ins. Additional shoring, sheeting, and bracing shall be placed wherever required, as determined by the Water Services Department, for the successful and safe execution of the work.

C. Pipe Embedment and Backfill:
   1. The granular embedment and backfill for sanitary sewers shall be done in accordance with Section 02250 – Trenching, Pipe Embedment and Backfill. See also drawing 02503-1.
   2. The sewer trench in earth excavation shall be carried to a point not less than four (4) inches below the bottom of the pipe barrel and when in rock excavation to a point not less than six (6) inches below the bottom of pipe barrel.
   3. Installation:
      a. Pipe Embedment: The pipe bedding shall be compacted to the bottom of pipe with proper allowance for bell joints. After each section or joint of pipe has been shoved "home" and placed in proper alignment, twelve (12) inches (no more, no less) of pipe embedment shall be placed above the pipe and compacted by hand or mechanical tampers. In no case shall brick or other large stones be used as bedding or as trench backfill.
      b. Backfill: After compacting the 12 inches of granular bedding above the pipe, see Section 02250 – Trenching, Pipe Embedment and Backfill for the backfill requirements of the remaining trench (in paved and in unpaved areas).

3.4 COMPLETION OF WORK AND SITE RESTORATION

A. All applicable inspection policies, procedures, and charges are made part of these specifications by reference and are subject to change by the City without notification. Copies of current policies, procedures and fee schedules may be obtained from the Water Services Department.

B. Site Restoration shall be done in accordance with Section 02575 – Surface Restoration. All pavement, surfacing, driveways, sidewalks, curb, gutter, sod, landscape and all other surface features affected by the work shall be restored.

Drawing 02503-1 on the following page.

Drawing 02503-1

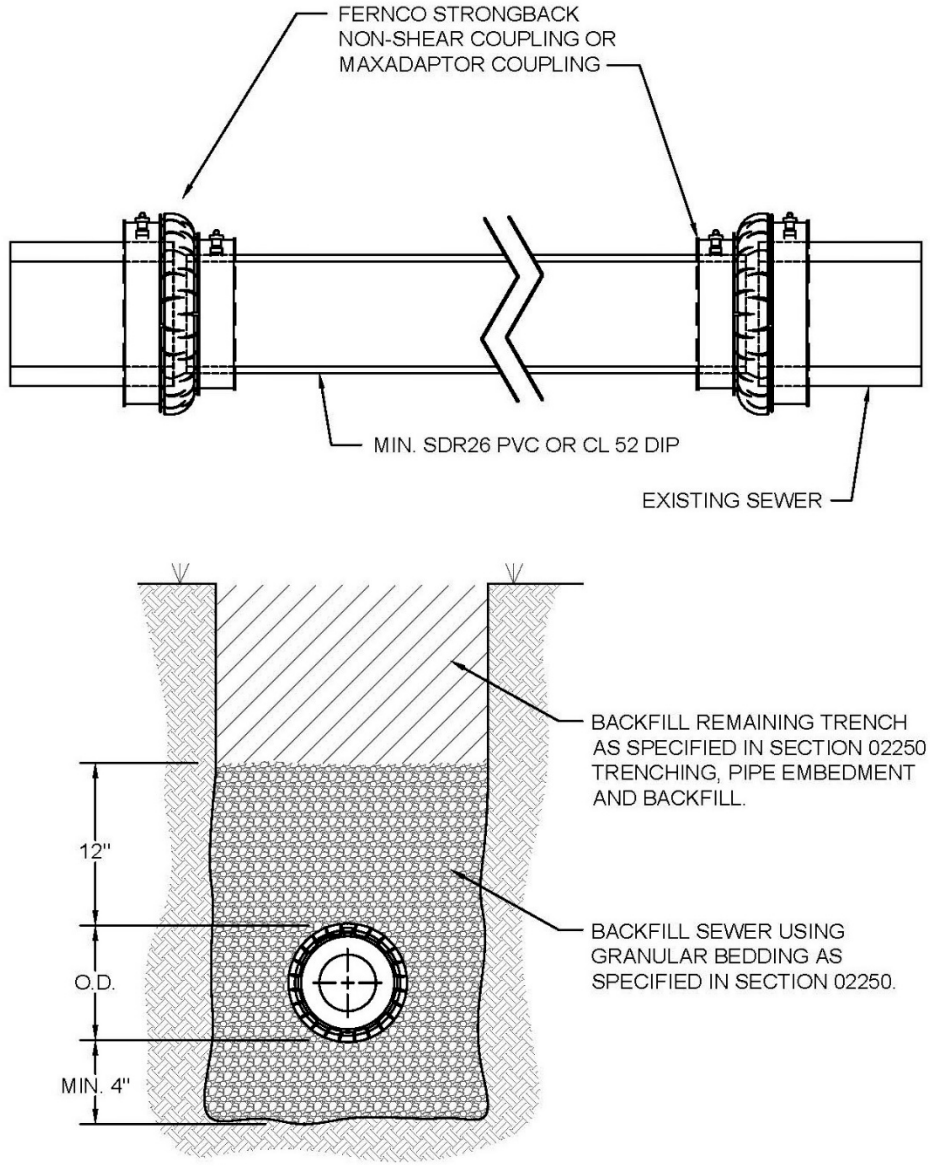

SCALE: NTS

SEWER MAINLINE OPEN CUT REPAIR

WATER SERVICES
CITY OF KANSAS CITY, MISSOURI
DRAWING NO. 02503-1

DEVELOPED BY: TECHNICAL ADVISORY COMMITTEE
APPROVED BY:
DATE: 4/16/2021

1 OF 1

END OF SECTION

SECTION 02505 – SANITARY SEWER SERVICE LINES AND CONNECTIONS

PART 1 - GENERAL

1.1 SUMMARY

This section applies to sanitary sewer service lines and connections to a public sewer which lie within public rights-of-way or in utility easements under the control of the City for sewer purposes. A sanitary sewer service line or sewer lateral is defined as the sewer line that begins and extends from the building which receives the sewage discharge of the building and conveys it to a public sewer or another private sewer. The sanitary sewer service line connection is the point where the sewer service line taps into the public sewer. The property owner owns the sanitary sewer service line from their building to the public sewer, including its connection thereto, and is solely responsible for its operation and maintenance (drawing 02505-1 illustrates the boundaries of this responsibility within public rights-of-way). If this specification conflicts with other specifications, this specification shall govern. If this specification conflicts with the Code of Ordinances, the Code of Ordinances govern.

1.2 RELATED SECTIONS

A. Section 01000 – General Project Requirements.
B. Section 01300 – Submittals.
C. Section 02200 – Earthwork.
D. Section 02250 – Trenching, Pipe Embedment and Backfill.
E. Section 02575 – Surface Restoration.
F. Section 02620 – Ductile Iron Pipe for Sewers.
G. Section 02624 – Polyvinyl Chloride (PVC) Gravity Sewer Pipe.
H. Section 06012 – Rehabilitation of Sewer Laterals and Sewer Lateral Connections.

1.3 CODES AND STANDARDS

A. Sanitary sewer service lines and its connection to the public sewer shall conform to all requirements set forth by the City, including but not limited to, ordinances, standards and specifications.
B. The publications listed below form a part of this specification to the extent referenced. The publications are referred to within the text by the basic designation only.
C. American Society for Testing and Materials (ASTM):
   - A746 Standard Specification for Ductile Iron Gravity Sewer Pipe.
   - D16 Standard Terminology for Paint, Related Coatings, Materials, and Applications.
   - D1784 Standard Specification for Rigid Polyvinyl Chloride (PVC) Compounds and Chlorinated Polyvinyl Chloride (CPVC) Compounds.
   - D2241 Standard Specification for Polyvinyl Chloride (PVC) Pressure Rated Pipe (SDR Series).
   - D2412 Standard Test Method for Determination of External Loading Characteristics of Plastic Pipe by Parallel Plate Loading.
   - D3034 Standard Specification for Type PSM Polyvinyl Chloride (PVC) Solid Wall Sewer Pipe and Fittings.
   - D3212 Standard Specification for Joints for Drain and Sewer Plastic Pipes Using

Flexible Elastomeric Seals.

E329 Standard Specification for Agencies Engaged in the Testing and/or Inspection of Materials Used in Construction.

F477 Standard Specification for Elastomeric Seals (Gaskets) for Joining Plastic Pipe.

F679 Standard Specification for Poly Vinyl Chloride (PVC) Large Diameter Plastic Gravity Sewer Pipe and Fittings.

1.4 SUBMITTALS

A. Drawings, specifications, and data covering the proposed materials shall be submitted to the City in accordance with Section 01300 - Submittals. The Contractor shall submit the following to the City for review and approval:
   1. Pipe, fittings and couplings.
   2. Information on gasket polymer properties.
   3. Tee fabrication details.
   4. Application methods, application requirements and chemical resistance data for all products furnished.
   5. Manufacturer's Certificate of Compliance.
   6. Pipe embedment, backfill, materials and sub-contractor used for site restoration.
   7. CCTV Inspection Equipment: Submit minimum 15 days prior to performing inspections:
      a. Name and qualifications of inspection firm.
      b. Brand name and model number of video equipment to be used.
   8. CCTV inspection video and inspection logs. Video shall become property of the City.
   9. Permits:
      a. The Contractor shall obtain all necessary permits and licenses required by the City, County and State.

1.5 DEFINITIONS

A. ABS: Acrylonitrile Butadiene Styrene.
B. ANSI: American National Standards Institute.
C. ASTM: American Society for Testing and Materials.
D. AWWA: American Water Works Association.
E. CCTV: Closed Circuit Television.
F. CIPP: Cured In-Place Pipe.
G. DIP: Ductile Iron Pipe.
H. PVC: Poly Vinyl Chloride.
I. SDR: Standard Dimension Ratio.
J. VCP: Vitrified Clay Pipe.

1.6 QUALITY ASSURANCE

A. The Contractor is responsible for the quality assurance and quality control of the Work.
B. All Work shall be performed by a Contractor with a proven record of performance for similar installations. Contractor shall submit the following:
   1. CCTV Inspection Company must have actively performed such services for minimum of 2 years.
   2. Warranty Terms and Period: Contractor's warranty period shall be three (3) years

for the performance and maintenance of the work performed.

1.7 PRODUCT DELIVERY, STORAGE AND HANDLING

A. Packaging, handling, delivery and storage of materials shall be done in accordance with this Section, the manufacturer's recommendations and in accordance with Section 01000 – General Project Requirements.

B. Delivery of materials shall be in manufacturer's original unopened and undamaged packages. Materials shall be clearly marked to identify brand name, contents and order number on each package. Packages showing signs of damage that may affect the condition of the contents are not acceptable.

PART 2 - PRODUCTS

2.1 MATERIALS

A. Pipe:

1. Approved pipe materials are: polyvinyl chloride (PVC) or ductile iron pipe (DIP).
2. Pipe materials other than those listed above shall not be used for sanitary sewer service laterals unless otherwise approved by the City.
3. General requirements:
   a. No sanitary sewer service line shall be constructed with an inside diameter of less than four (4) inches.
   b. Ductile Iron Pipe (DIP) shall conform to Section 02620 – Ductile Iron Pipe for Sewers.
   c. Polyvinyl Chloride (PVC) pipe shall conform to Section 02624 – Polyvinyl Chloride (PVC) Gravity Sewer Pipe.

B. Fittings:

a. All fittings shall be factory-produced and shall be designed for installation on the pipe to be used. Fittings shall be of the same quality and material as the pipe used.
b. Saddles for Tapping the Public Sewer:
   i. VCP sewer main: a plastic (PVC) strap on saddle with a neoprene gasket under the saddle shall be used.
   ii. PVC sewer main: a plastic (PVC) strap on saddle with a neoprene gasket under the saddle shall be used.
   iii. DIP sewer main: a plastic (PVC) strap on saddle with a neoprene gasket under the saddle shall be used.
   iv. ABS sewer main: a plastic (PVC) strap on saddle with a neoprene gasket under the saddle shall be used.
c. Couplings for point repairs:
   i. All couplings shall form tight compression joints.
   ii. When connecting to the existing sanitary sewer service line, the Contractor shall use Non-Shear Fernco Strongback 5000 series couplings, MaxAdaptor couplings or City approved equal.

PART 3 - EXECUTION

3.1 SAFETY

A. All work shall be performed in accordance with applicable OSHA standards.

3.2 PREPARATION

A. Contractor shall clear the work area required for excavation in accordance with Section 02200 – Earthwork. It is the Contractor's responsibility to provide a photo or video log of the work zone(s) and to protect and restore the area to a condition as good as or better than it was before the Work was started. All removed fences; shrubbery, sidewalks, planters and landscaping shall be restored utilizing new materials unless otherwise directed in writing by both the Owner/Occupant and the City.

B. Existing Utilities:
   1. The Contractor is responsible for protecting all utilities. All permits and licenses required for the execution of the Work shall be obtained by the Contractor.
   2. The Contractor shall notify all utilities at least 48 hours in advance before making excavation in accordance with Missouri State Law.
   3. When water mains or water service lines exist in the area, the Contractor shall comply with all applicable rules and regulations of the Kansas City, Missouri Water Services Department and the Missouri State Board of Health.

3.3 INSTALLATION

A. General Construction Requirements:
   1. The maximum turn permissible at any one fitting shall be forty-five (45) degrees (one-eighth (⅛) bend).
   2. Sanitary sewer service lines shall be connected to a tee, wye or a manhole on the public sewer when such is available. Where no tee, wye or manhole is available, the sewers shall be tapped. Paragraph 2.1.B. lists the type of saddles permissible depending on the material of the sewer to be tapped.
   3. Open cut point repairs on a sanitary sewer service lateral shall be done in accordance with drawing 02505-2 and as described herein.
   4. Open cut replacement of a sanitary sewer service line connection shall be done in accordance with drawing 02505-3 and as described herein.

B. Excavation:
   1. Excavation required for sanitary sewer service lines shall be done in accordance with Section 02200 – Earthwork except as modified herein.
   2. Width of Trench: The width of trench at the top of a pipe shall not exceed the outside diameter of the pipe plus eighteen (18) inches.
   3. Boring/Tunneling:
      a. Boring/Tunneling will be permitted only under existing utilities or upon permission from the Water Services Department.
      b. If boring/tunneling is permitted, the Contractor shall submit to the Water Services Department for approval the method of boring/tunneling, type of bracing and precautions used to prevent a collapse.
   4. Sheeting, Shoring and Bracing: The Contractor shall do all necessary trench bracing, shoring, or sheeting to prevent slides or cave-ins. Additional shoring, sheeting, and bracing shall be placed wherever required, as determined by the Water Services Department, for the successful and safe prosecution of the work.

C. Pipe Embedment:
   1. The granular embedment for sanitary sewer service lines shall be placed in accordance with Section 02250 – Trenching, Pipe Embedment and Backfill.

2. The sewer trench in earth excavation shall be carried to a point not less than four (4) inches below bottom of the pipe barrel and in rock excavation to a point not less than six (6) inches below bottom of pipe barrel.
3. Installation:
   a. The pipe bedding shall be compacted to the bottom of pipe with proper allowance for bell joints. After each joint of pipe has been shoved "home" and placed in proper alignment, pipe embedment shall be placed and compacted to a minimum of twelve (12) inches above the pipe bell. In no case shall brick or other large stones be used as bedding.

D. Line and Grade: Minimum Grade: The minimum grade allowable for private sewers in public right-of-way will be one-fourth (¼) inch per linear foot. A grade as little as one-eighth (⅛) inch per linear foot may be allowed in special cases upon written permission from the Water Services Department. In no case will a private sewer in public right-of-way be constructed having a grade less than one-eighth (⅛) inch per linear foot.

E. Minimum Allowable Cover: A minimum cover of four (4) feet from top of pipe to the finish grade of ground surface is required for all sanitary sewer service lines in public rights-of-way or in utility easements under the control of the City for sewer purposes.

F. Backfill:
   1. Backfill shall be done in accordance with Section 02250 – Trenching, Pipe Embedment and Backfill.
      a. Bedding material shall be placed a minimum of one (1) foot above the top of the sanitary sewer service line. Such material shall be carefully tamped around the pipe by hand or mechanical tampers.
      b. See Section 02250 – Trenching, Pipe Embedment and Backfill for backfill requirements in paved areas and in unpaved areas.
   2. Filling the annular space in a casing (space between carrier pipe and casing):
      a. Material shall be stabilized sand consisting of sand mixed to a ratio of twelve (12) parts sand to one (1) part cement.
      b. Stabilized sand shall be placed in a manner that will completely fill all voids between the casing and the outside diameter of the pipe. Adequate provisions shall be made to prevent the mixture from running out the ends of the casing.

G. Tapping City Sewers: All applicable tapping policies and procedures are made part of these specifications by reference and are subject to change by the City without notification. Copies of current policies and procedures as well as fee schedules used in charging for City-made taps can be obtained from the Water Services Department.

3.4 COMPLETION OF WORK AND SITE RESTORATION

A. All applicable inspection policies, procedures, and charges are made part of these specifications by reference and are subject to change by the City without notification. Copies of current policies, procedures and fee schedules may be obtained from the Water Services Department.

B. Site Restoration shall be done in accordance with Section 02575 – Surface Restoration. All pavement, surfacing, driveways, sidewalks, curb, gutter, sod, landscape and all other surface structures affected by the work shall be restored.

Drawings 02505-1 through 02505-3 are on the following three pages.

Drawing 02505-1

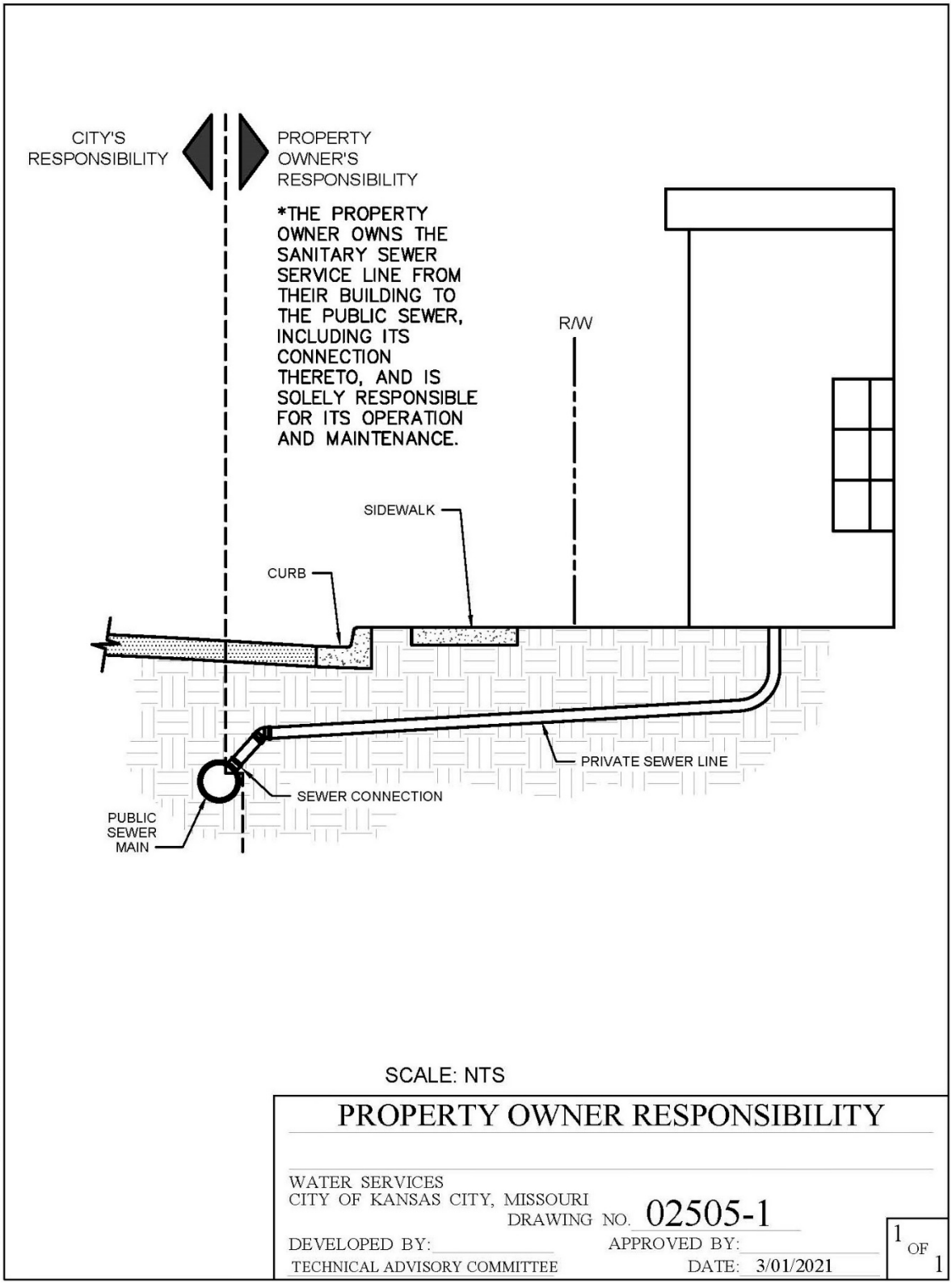

Drawing 02505-2

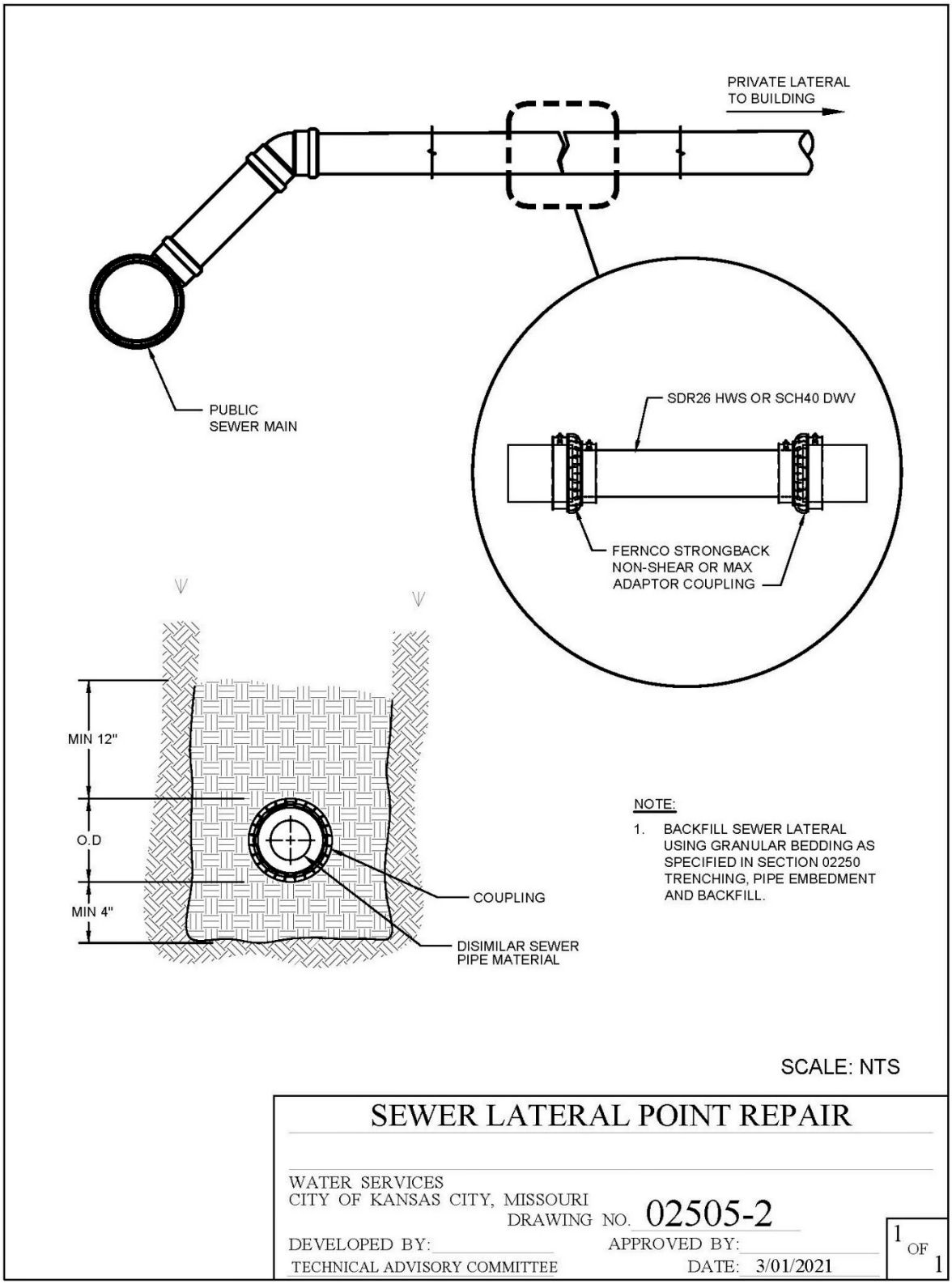

Drawing 02505-3

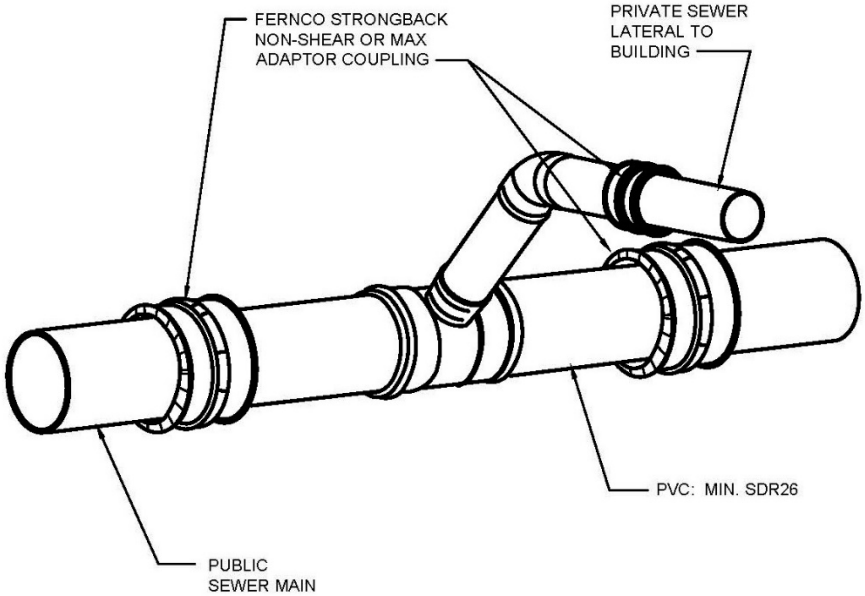

NOTE:

1. BACKFILL PUBLIC SEWER MAIN AND PRIVATE SEWER LATERAL USING GRANULAR BEDDING AS SPECIFIED IN SECTION 02250 TRENCHING, PIPE EMBEDMENT AND BACKFILL.

SCALE: NTS

SEWER LATERAL CONNECTION REPAIR

WATER SERVICES
CITY OF KANSAS CITY, MISSOURI
DRAWING NO. 02505-3

DEVELOPED BY: TECHNICAL ADVISORY COMMITTEE
APPROVED BY:
DATE: 3/01/2021

1 OF 1

END OF SECTION

SECTION 02575 – SURFACE RESTORATION

PART 1 - GENERAL

1.01 SUMMARY

A. This section covers Work associated with surface restoration within the City's right-of-way, provided easements and other areas disturbed during construction.

B. The Contractor shall replace all surface material and shall restore paving, curbing, sidewalks, gutters, shrubbery, fences, sod and all other surfaces disturbed or damaged by construction activities to a condition of equal or better than before the start of the Work.

C. The Contractor shall restore the Site to conditions not less than that which existed prior to starting construction unless otherwise required by: the contract documents, permits and/or licenses.

D. Coordinate surface restoration work with the affected property owners and the City/Design Professional. Special requests for restoration should be documented in writing and provided to the City/Design Professional.

E. Private property on which the City has prior rights (i.e. easements, general utility easement, etc.) and/or has obtained easements, rights-of-way, licenses and/or agreements from the property owner shall be restored in conformance with these Contract Documents. Restore public property in accordance with the requirements of the department or public body having jurisdiction. Such entities include, but are not limited to, the following:

1. The City of Kansas City, MO Public Works Department.
2. The City of Kansas City, MO Parks and Recreation Department.
3. Missouri Department of Transportation.

1.02 SPECIFICATION MODIFICATIONS

A. It is understood that throughout this section, these Specifications may be modified by appropriate items in Section 01015 – Specific Project Requirements or as otherwise indicated in the contract documents.

1.03 RELATED SECTIONS

A. Section 00700 – General Conditions.
B. Section 00800 – Supplementary Conditions.
C. Section 01000 – General Project Requirements.
D. Section 01015 – Specific Project Requirements.
E. Section 01320 – Construction Progress Documentation
F. Section 01322 – Photographic and Video Documentation.
G. Section 01566 – Cleanup Operations.
H. Section 02200 – Earthwork.
I. Section 02250 – Trenching, Pipe Embedment and Backfill.
J. Section 02930 – Seeding.
K. Section 02931 – Sodding.
L. Section 02949 – Tree Protection, Removal and Replacement.

1.04 CODES AND STANDARDS

A. The publications listed below form a part of this specification to the extent referenced. The most recent version of the publications are referred to within the text by the basic designation only.

B. The City of Kansas City, Missouri Department of Public Works Construction and Material Specifications (http://kcmo.gov/publicworks/design-construction-standards/):

KCMO PW 2200*	Section 2200, Paving.
KCMO PW 2202	Subsection 2202, Untreated Compacted Aggregate.
KCMO PW 2204	Subsection 2204, Prime and Tack Coat.
KCMO PW 2209	Subsection 2209, Curbing.
KCMO PW 2211	Subsection 2211, Smoothness.
KCMO PW 2301	Subsection Section 2301, Incidental Construction, Standard. Sidewalks, Sidewalk Ramps, Driveways and Bicycle/Pedestrian Paths.
KCMO PW 2302	Subsection 2302 Asphalt Sidewalks, Driveways and Bicycle/Pedestrian Paths.
KCMO PW 2306	Subsection 2306 Pavement Markings.

C. The City of Kansas City, Missouri Department of Public Works Standard Drawings (http://kcmo.gov/publicworks/standard-drawings/):

KCMO PW C*	Standard Drawing Number C, Curbs.
KCMO PW D-1	Standard Drawing Number D-1, Driveway Entrances.
KCMO PW D-2	Standard Drawing Number D-2, Reconstructed Driveways.
KCMO PW D-US	Standard Drawing Number D-US, Driveway Unimproved Streets.
KCMO PW SR-1	Standard Drawing Number SR-1, Street Cut Restoration.

D. The City of Kansas City, Missouri Parks and Recreation Department (https://kcparks.org/services/parks-planning-and-design-services/):

KCMO PR CR*	Standard Detail Number CR, Rollback Curb and Gutter.
KCMO PR DC	Standard Detail Number DC, Commercial Driveway.
KCMO PR DR	Standard Detail Number DR, Residential Driveway.
KCMO PR SC	Standard Detail Number SC, Commercial Sidewalk.
KCMO PR SR	Standard Detail Number SR, Residential Sidewalk.
KCMO PR ARA	Standard Detail Number ARA, ADA Curb Ramp-Type A.
KCMO PR ARB	Standard Detail Number ARB, ADA Curb Ramp-Type B.
KCMO PR C	Standard Detail Number C, Curb.
KCMO PR CG	Standard Detail Number CG, Curb and Gutter.
KCMO PR CJ	Standard Detail Number CJ, Concrete Joint.

*Abbreviation used within this specification section to distinguish between the standards of the Public Works Department (PW) and the Parks and Recreation Department (PR).

E. American Society for Testing and Materials (ASTM):

ASTM D 422	Standard Test Method for Particle-Size Analysis of Soils, grain-size, hydrometer analysis, hygroscopic moisture, particle-size, sieve analysis.
ASTM C 309	Standard Specification for Liquid Membrane-Forming Compounds for Curing Concrete.
ASTM A 615	Standard Specification for Deformed and Plain Carbon-Steel Bars for Concrete Reinforcement.
ASTM D 977	Standard Specification for Emulsified Asphalt.
ASTM D 2397	Standard Specification for Cationic Emulsified Asphalt.

ASTM D 2027	Standard Specification for Cutback Asphalt (Medium-Curing Type).
ASTM D 2028	Standard Specification for Cutback Asphalt (Rapid Curing Type).
ASTM E11	Standard Specification for Woven Wire Test Sieve Cloth and Test Sieves.
ASTM D448	Standard Classification for Sizes of Aggregate for Road and Bridge Construction.
ASTM C131	Standard Test Method for Resistance to Degradation of Small-Size Coarse Aggregate by Abrasion and Impact in the Los Angeles Machine.

F. Missouri Department of Transportation:

MoDOT	Missouri Standard Specifications for Highway Construction (https://www.modot.org/missouri-standard-specifications-highway-construction).

1.05 DEFINITIONS

A. Established Lawn: An Unpaved Area of soil-covered land planted with grasses which are maintained at a height of 5 inches or less. Established lawns include, but are not limited to, grassed areas associated with residential lots, businesses, parks, cemeteries, etc.
B. Improved Street: A paved, public street, or portion thereof, that incorporates a curb and a gutter.
C. Paved Areas: Areas for which the final surfacing will be street pavement, shoulders, driveways, parking lots, curbs, gutters, sidewalks, gravel roads, or other surface construction or structures.
D. Site: Lands or areas indicated in the Contract Documents as being furnished by the City upon which the Work is to be performed, including rights-of-way and easements for access thereto, and such other lands furnished by the City which are designated for the use of the Contractor, or as defined in Section 00700 – General Conditions.
E. Unpaved Areas: Areas for which the final surfacing will not be a Paved Area.
F. Unimproved Street: A public street, or portion thereof, that does not incorporate a curb and gutter.

1.06 INFORMATION PROVIDED BY THE CITY

A. As provided in the Contract Documents.

1.07 SUBMITTALS

A. Submit as specified in Section 01300 – Submittals.
B. Shop Drawings:
   1. Submit as required by the contract documents.
C. Product Data:
   1. Submit as required by the contract documents.
D. Samples:
   1. Submit as required by the contract documents.

E. Other Submittals:
   1. The Contractor's Restoration Plan and Schedule adhering to all requirements of the contract documents.
   2. All applicable Department of Public Works standard specifications used to complete the Work.

3. All applicable Department of Public Works standard details used to complete the Work.
4. All applicable Parks and Recreation Department standard details used to complete the Work.

1.08 QUALITY ASSURANCE

A. The Contractor is responsible for the quality assurance and quality control of the Work.
B. All areas disturbed by the Contractor's operations shall be restored in accordance with the contract documents, applicable permits and as directed by the City/Design Professional.
C. All Work shall be performed by a Contractor, with a proven record of performance for the required restoration work. The Contractor shall submit the following:
   1. The materials to be used to restore the surface.

1.09 PRODUCT DELIVERY, STORAGE AND HANDLING

A. Delivery of materials shall be in manufacturer's original unopened and undamaged packages. They shall be clearly marked to identify brand name, contents and order number on each package. Packages showing indication of damage that may affect condition of contents are not acceptable.
B. Storage of material shall provide protective cover from damage and stored at temperatures in accordance with manufacturer's recommendation. Materials shall be staked or stored in accordance with manufacturer's recommendations.

1.10 RESTORATION SCHEDULE

A. Project milestones and restoration schedule criteria shall be as specified in the following sections:
   1. Section 00800 – Supplemental Conditions.
   2. Section 01015 – Specific Project Requirements.
B. The specified milestone and/or restoration schedule criteria shall be incorporated in the project schedule as required by Section 01320 – Construction Progress Documentation.

1.11 PROPERTY-SPECIFIC RESTORATION

A. Easements provided by the City for the construction of the Work may include property-specific restoration requirements. These requirements are noted on the Contract Drawings or included in Section 01015 – Specific Project Requirements.

PART 2 - PRODUCTS

2.01 INCIDENTAL CONCRETE CONSTRUCTION

A. Incidental concrete construction includes curbs, gutters, sidewalks, sidewalk ramps, ADA ramps, driveways, bicycle/pedestrian paths and other Work indicated in the Contract Documents.
B. Parks and Recreation Department Standards: Incidental concrete surface restoration for Work having jurisdiction of the City of Kansas City, Missouri Parks and Recreation Department shall comply with the standards listed in paragraph CODES AND STANDARDS. All materials and construction standards are noted on the standard details.
C. Public Works Department Standards: All materials and construction for incidental concrete surface restoration for Work having jurisdiction of the City of Kansas City, Missouri Public shall comply with the standards listed in paragraph CODES AND STANDARDS:
   1. Sidewalks: KCMO PW 2301.
   2. Sidewalk ramps: KCMO PW 2301.

3. Driveways: KCMO PW 2301.
4. Bicycle/pedestrian paths: KCMO PW 2301.
5. Curbs: KCMO PW 2209.
6. Curb and gutters: KCMO PW 2209.

2.02 GRANULAR SUBBASE MATERIAL

A. Granular subbase material for incidental concrete construction shall conform to the requirements of Section 02200-Earthwork.

2.03 INCIDENTAL ASPHALT CONSTRUCTION

A. Incidental asphalt work includes, but is not limited to, the construction of asphaltic concrete sidewalks, driveways, bicycle/pedestrian ramps and other Work indicated in the Contract Documents.
B. Materials and construction for incidental asphalt surface restoration shall comply with the standards listed in paragraph CODES AND STANDARDS, KCMO PW 2302.

2.04 PAVEMENT

A. Restoration of pavements shall include, but is not limited to, streets, parking lots, alleys, and other areas subject to traffic and other Work indicated in the Contract Documents.
B. All materials and construction shall comply with the standards listed in paragraph CODES AND STANDARDS, KCMO PW 2200 and KCMO PW SR-1.
C. Pavement shall be restored with the type of material existing prior to the Work unless otherwise noted in the Contract Documents.

2.05 PAVEMENT MARKINGS

A. Materials and construction for incidental asphalt surface restoration shall comply with the standards listed in paragraph CODES AND STANDARDS, KCMO PW 2306.
B. Paragraph Method of Measurement shall not apply.
C. Paragraph Basis of Payment shall not apply.

2.06 AGGREGATE FOR SURFACING

A. Aggregate for surfacing shall meet the requirements of Section 02200-Earthwork, paragraph GRANULAR FILL MATERIAL.

2.07 SEEDING SODDING

A. Seeding shall conform to Section 02930 – Seeding.

2.08 SODDING

A. Sodding shall conform to Section 02931 – Sodding.

PART 3 - EXECUTION

3.01 GENERAL

A. The Contractor shall restore all permanent type pavements, sidewalks, driveways, curbs, gutters, and surface structures, lawns, landscaped areas, and other land covers that are removed or disturbed as a result of construction operations (unless otherwise requested in writing by the property owner).

3.02 FINAL GRADING

A. Final grading shall conform to Section 02200 – Earthwork, paragraph FINAL GRADING AND PLACEMENT OF TOPSOIL.
B. Finish grade the area to lines and grades which existed prior to the area being disturbed, with special attention directed to proper surface drainage, and the refilling of settled excavations with earth or fill compacted to the appropriate densities required.
C. Eroded areas and areas having inadequate drainage, as indicated by ponding of water, shall be filled.
D. Ruts, deep tracks, dead furrows, and ridges shall be eliminated.
E. The area shall be smoothed by raking and/or dragging.
F. Before placing topsoil, remove and dispose of excess gravel to the satisfaction of the City. Leave no stones larger than 1 inch on the surface.
G. Flower and vegetable gardens in existence prior to this project shall have the separately stored topsoil restored unless otherwise requested in writing by the property owner.
H. Cultivated areas shall be left in tillable condition; compacted areas shall be plowed or cultivated to loosen and aerate the soil.

3.03 AGGREGATE SURFACING

A. Unless otherwise indicated on the Drawings, gravel surfaces shall be restored with a minimum 6 inches of compacted aggregate,

3.04 ESTABLISHMENT OF TURF

A. Sodding
   1. Sodding shall be conducted in accordance with Section 02931 – Sodding.
   2. Unless otherwise specified in Section 01015 – Specific Project Requirements or on the Drawings, all unpaved areas that are established lawns prior to construction that are disturbed by construction shall be sodded (temporary seeding as approved by the City/Design Professional).
   3. If the Contract Documents do not identify the type of sod to be placed, then the sod type shall be the same as the type removed or damaged as part of the Work, or as directed by the City's representative (unless otherwise requested in writing by the property owner).
   4. Section 02931 – Sodding provides specification for the following sod types
      (a) Fescue Turf:
         (i) Type 1 Sod – Turf Type Tall Fescue.
         (ii) Type 2 Sod – Kentucky Blue Grass and Turf Type Tall Fescue.
      (b) Bermuda Turf: Type 3 Sod – Bermuda Grass.
      (c) Zoysia Turf: Type 4 – Zoysia Grass.
B. Seeding:
   1. Seeding shall be conducted in accordance with Section 02930 – Seeding.
C. Maintenance:
   1. The Contractor shall be responsible for maintaining all turfed areas disturbed by construction activities.
   2. Maintenance Period: The Contractor shall maintain turfed areas until all of the following conditions have been met:
      (a) The turf, including repairs, has been established as defined herein.
      (b) The turf meets the requirements of paragraph ACCEPTABLE CONDITIONS to the satisfaction of the City.
      (c) The minimum establishment period for all new turf, including repairs has passed.
      (d) The Contractor shall be responsible for maintenance of turfed areas until establishment.

(e) If specified in Section 01015 – Specific Project Requirements, the Contractor has provided notification in accordance with paragraph NOTIFICATION OF PROPERTY OWNERS.
(f) As approved by the City in accordance with paragraph EARLY RELINQUISHMENT OF MAINTENANCE RESPONSIBILITIES.

3. All turfed areas shall be kept in a healthy growing condition by watering, weeding, mowing, trimming, edging, repairs, etc.
4. Watering and Water Usage:
   (a) Promptly after seeding or sodding, wet the area thoroughly. Watering shall continue so as to keep all areas moist as needed to promote healthy growth.
   (b) Water used in this work shall be furnished by the Contractor and shall be suitable for irrigation and free from ingredients harmful to plant life.
   (c) All watering equipment required for the work shall be furnished by the Contractor.
   (d) Water may be taken from adjacent fire hydrants or public water lines only through metered and backflow protected hydrant connections permitted and issued by the City.
5. Mowing:
   (a) All turfed areas within the limits of the Site shall be mowed with approved mowing equipment to a height of 3 inches whenever the average height of vegetation becomes 5 inches.
   (b) Grass clippings shall be bagged with the mowing processes and clippings shall be disposed of off-site.

D. Establishment Period:
1. The establishment period for turfed areas shall be no less than 30 calendar days from the time of planting or last time of repair.
2. The Contractor may not request the Final Inspection (as specified in Section 00700 – General Conditions, Article 14) until all turfed areas have completed the minimum establishment period.

E. Acceptable Conditions:
1. Turfed areas will be acceptable when grasses are growing, are in good condition, and no area more than 20 percent of the total areas is bare; of which no single area shall be more than 1-foot square in area. Any bare area larger than this will not be acceptable and shall be re-seeded or re-sodded (as applicable) at no additional cost to the City.
2. For sodded areas, the grass shall be sufficiently rooted so that that sod pads cannot be lifted from the sod bed.

F. Early Relinquishment of Maintenance Responsibilities:
1. The Contractor may request in writing the early acceptance of turfed areas and a return of maintenance responsibilities to the property owner prior to the end of the maintenance period.
2. Limitations on Acceptance of Turf:
   (a) Acceptance of this request is at the sole discretion of the City.
   (b) Acceptance of the turf for the purposes of transferring maintenance responsibilities does not constitute acceptance of the Work as a whole, Substantial Completion, Partial Utilization, or a Final Inspection as define in Section 00700 – General Conditions and modified in Section 00800 – Supplementary Conditions.
3. Before the request is made, the following conditions must be met:
   (a) The turf, including repairs, has been established.
   (b) The minimum establishment period has passed for the turf, including repairs.
   (c) Work has substantially been completed within the area, and no other construction activities are anticipated that will disturb or damage the turf.

(d) The Contractor has demobilized all labor and equipment from the area.
(e) All construction materials have been removed from the area.

4. The Contractor shall submit a written request to the City indicating the area of the Site for which turf maintenance responsibilities are to be transferred to the property owners.
5. The Contractor shall schedule and inspection with the City and /or their representative to determine if the turfed areas are acceptable as specified above.
6. If the all turf within the defined area is acceptable, then the City will provide written notification to the Contractor documenting acceptance.
7. After acceptance of the request for relinquishment of maintenance, the Contractor shall perform the following:
   (a) Within 5 working days of acceptance, document the condition of the turfed areas in accordance with Section 01322 – Photographic and Video Documentation. Photographic documentation of conditions shall be conducted at no additional cost to the City.
   (b) Notify all affected property owners in accordance with paragraph NOTIFICATION OF PROPERTY OWNERS.
   (c) Provide written notification to the City that all affected property owners have been notified of the relinquishment of maintenance responsibilities.
8. After all the requirements listed above have been meet, then the City will consider maintenance responsibility of the identified turfed areas to be transferred to the respective property owners.

G. Notification of Property Owners: In accordance with Section 01581 – Public Communications, the Contractor shall notify all affected property owners that the Work on their property has been completed, that turf has been established and that maintenance of the turfed area is now the property owner's responsibility.

3.05 TREES, BUSHES AND PLANTS: PROTECTION AND REPLACEMENT

A. Protection:
   1. The protection of trees, bushes and plants shall be done in accordance with Section 02949 – Tree Protection, Removal and Replacement.

B. Transplanting shall be done in accordance with Section 02949:
   1. Existing trees, bushes, and hedges which cannot be tied back or trimmed to prevent damage and require removal because of the proposed construction shall be transplanted with a tree spade or replaced.
   2. Tree removal shall include the removal of stump and roots as specified in Section 02949.
   3. Transplanting shall be at the location directed by the City/Design Professional or as applicable by the Parks and recreation Department.
   4. After digging the plants, properly store them until they can be transplanted.

C. Pruning or Replacement:
   1. Pruning or replacement of trees shall be done in accordance with Section 02949 – Tree Protection, Removal and Replacement.
   2. Replacement plants shall not be delivered until they can be planted.

D. Plant during the proper seasons. Do not plant in frozen soil or during unfavorable weather conditions. Dig tree pits of such size as to provide ample space for the entire root system, as the tree comes from the nursery, without crowding or bending the roots. The pits shall be 12 inches wider than the ball diameter, have vertical sides, and be six inches deeper than the thickness of the ball. Thoroughly loosen the soil in the bottom of the pit by spading to a depth of six inches. Dig holes immediately before planting. Dispose of soil earth dug from the tree pits off the project site.

3.06 STREET CUT RESTORATION

A. All pavement restoration work in streets shall conform to KCMO PW SR-1 with the following exceptions:
   1. Pipe bedding material and installation shall conform to Section 02250 – Trenching, Pipe Embedment and Backfill.
   2. Backfill material and installation shall conform to Section 02250 – Trenching, Pipe Embedment and Backfill.
   3. With respect to DETAIL 1 – ASPHALT PAVEMENT SURFACE (SR-1, page 1 of 3), the Contractor may pour the Portland cement concrete cap to finish grade. If poured to finish grade, the Contractor shall mill the top of the Portland cement concrete cap a uniform 2 inches ensuring a 2" vertical profile at edge prior to installing the 2" Patch (Type-5-01).

B. Smoothness:
   1. The finish of the pavement surface shall be substantially free from waves or irregularities and shall be true to the established crown and grade.
   2. The final surface of pavement will comply with KCMO PW 2211.
   3. Testing for smoothness shall be conducted as directed by the City/Design Professional.
   4. Measurements for smoothness shall be pass or fail at the sole discretion of the City or their representative. No pay adjustments will be considered.

C. Provide a straight joint between the existing and new surface per KCMO PW SR-1. All joints shall be at right angles. Diagonal cutting of pavement is prohibited.

D. Unless the top 2" will be milled, cure and protect all exposed concrete installed under this contract in accordance with the referenced standard.

E. Unless additives are used to accelerate curing, concrete shall achieve 70% of maximum strength before allowing traffic or construction equipment on the concrete (as proven by cylinder breaks).

3.07 CONCRETE SIDEWALKS, TRAILS, DRIVEWAY APPROACHES, AND RAMPS

A. Remove concrete to the nearest joint. Removal of partial squares shall not be allowed.

B. Saw-cut existing sidewalks at construction joints. Patching existing sidewalk squares damaged during construction activities shall not be allowed.

C. Construct in accordance with all applicable KCMO Public Works and Parks and Recreation Standards.

D. Minimum concrete thickness for residential sidewalks, trails, driveway approaches, ADA ramps, etc. shall be in accordance with the applicable KCMO Public Works or Parks and Recreation Standard.

E. All concrete shall be constructed on a minimum of 4 inches of compacted granular sub-base material.

F. Where sidewalks are constructed across aggregate driveways, increase the thickness to a minimum of six inches across the width of the driveway.

G. At locations where sidewalks intersect with streets and sidewalk restoration is required, the Contractor shall construct sidewalk ramps in accordance with KCMO PW 2301.

3.08 CONCRETE CURB AND GUTTER

A. Curb and Gutter dimensions and cross sections shall conform to existing installations. Construct new curbs and gutter in accordance with KCMO PW C.

B. Expansion joints with dowels shall be placed where the new curb abuts existing curb and as required by KCMO PW C.

3.09 DRIVEWAY ENTRANCE/APPROACH RESTORATION

A. Driveways shall be restored to a width matching preconstruction conditions, as indicated on the Drawings, or as indicated Section 01015 – Specific Project Requirements.

B. Subgrades for driveway entrance restoration shall be in accordance with Section 02200 – Earthwork, paragraph BACKFILL AND COMPACTION.

C. The Contractor shall provide full driveway flare/approach replacement if any of the following conditions are met:
   1. The Work requires removal of a portion of the driveway which includes the driveway flare/approach.
   2. The Contractor damages the driveway flare/approach.
   3. As indicated on the Drawings.
   4. As specified in Section 01015 – Specific Project Requirements.

D. The Contractor may remove the drive approach and driveway pavement within the right-of-way and/or easements necessary to facilitate the Work.

E. The limits of restorations beyond disturbed areas shall be as follows:
   1. To the Nearest Joint: The Contractor shall restore paved driveway surfaces from the street pavement to the nearest existing driveway joint.
      (a) The Contractor shall saw cut the full depth of pavement to be removed.
      (b) In no case shall the joint created by saw cutting be less than 3 feet from an existing joint. Adjust the location of the saw cut accordingly.

F. Driveway Entrance Replacement Standards: Driveways entrances that abut improved streets shall be reconstructed in accordance with the following standards:
   1. Public Works Department Standards:
      (a) KCMO PW D-1.
      (b) KCMO PW D-2.
      (c) Construction shall be in accordance with KCMO PW 2301.
   2. Parks and Recreation Department Standards:
      (a) KCMO PR DC.
      (b) KCMO PR DR.
      (c) Construction shall be in accordance with KCMO PW 2301.
   3. Asphalt Driveway Entrances Abutting Unimproved Streets: Asphalt driveway entrances that abut unimproved streets shall be reconstructed in accordance with the following standards:
      (a) KCMO PW D-US.
      (b) Construction shall be in accordance with KCMO PW 2302.
   4. Concrete Driveways abutting Unimproved Street: Concrete driveway entrances that abut unimproved streets shall be reconstructed in accordance with the following standards:
      (a) KCMO PW D-US, except that the material for construction shall be concrete.
      (b) Construction shall be in accordance with KCMO PW 2301.
      (c) The concrete thickness shall be a minimum of 6 inches.
      (d) Expansion and contraction joints shall conform to the details shown on KCMO PW D-1.
      (e) New joints shall match existing joint patterns (finished the same as existing), but shall be spaced at a maximum distance of 10 feet in both directions ($\leq$ 100 square feet).

3.10 DRIVEWAY PATCHING

A. Driveway patching will be allowed if any of the following conditions are met:
   1. The Work does not require the removal of the driveway flare.
   2. The Contractor does not damage the driveway flare/approach.

3. As indicated on the Drawings.
4. As specified in Section 01015 – Specific Project Requirements.
5. As requested in writing from the City.

B. The Contractor may remove and replace a portion of the driveway necessary to facilitate the Work and the existing driveway flare may remain. Pavement shall be removed and replaced in accordance with the following:
   1. To the Nearest Joint:
      (a) The Contractor shall remove and replace damaged driveway surfaces from the joint of the driveway flare/approach to the nearest joint of the driveway.
         i. If the nearest joint is beyond the right-of-way or easement, the Contractor may saw cut the driveway if permitted by the City/Design Professional. In no case shall the joint created by saw cutting be less than 3 feet from an existing joint.
   2. The Contractor shall saw cut the full depth of pavement to be removed.

C. Subgrades for driveway patching shall be in accordance with Section 02200 – Earthwork, paragraph BACKFILL AND COMPACTION.

D. The Contractor shall replace all paved surfaces damaged or removed for the Work.

E. Concrete Driveways:
   1. Construction shall be in accordance with KCMO PW 2301.
   2. The thickness of the concrete shall be the same as the pavement removed or 6 inches; whichever is greater.

F. Asphalt Driveways:
   1. Construction shall be in accordance with KCMO PW 2302.
   2. The thickness of the concrete shall be the same as the pavement removed or 6 inches; whichever is greater.

3.11 ASPHALTIC CONCRETE PAVEMENT

A. Construction of asphaltic concrete pavement shall conform to KCMO PW 2200.

B. The limits of asphaltic concrete replacement shall be noted on the Drawings.

C. Applicable details for asphaltic concrete pavement reconstruction shall be as indicated on the Drawings or Section 01015 – Specific Project Requirements.

3.12 PORTLAND CEMENT CONCRETE PAVEMENT

A. Construction of Portland Cement Concrete pavement shall be in accordance with KCMO PW 2200. The limits of asphalt concrete replacement shall be noted on the Drawings.

B. The limits of Portland Cement Concrete pavement replacement shall be as indicated on the Drawings.

C. Applicable details for Portland Cement Concrete pavement reconstruction shall be as indicated on the Drawings or Section 01015 – Specific Project Requirements.

3.13 SUBSTANTIAL COMPLETION/ACHIEVEMENT OF FULL OPERATION

A. When the Contractor considers the Work ready for its intended use, the Contractor shall notify the City in accordance with Section 00700 – General Conditions, Article 14 – Payments to the Contractor and Completion.

3.14 CLEANUP

A. Cleanup operations shall be conducted in accordance with Section 01566 – Cleanup Operations.

3.15 SAFETY SIGNS, BARRICADES, LIGHTS AND PROJECT SIGNS

A. Maintain adequate safety signs, barricades and lights until final restoration is completed.
B. The Contractor shall install and maintain all project signs for the duration of the Work.

3.16 MAIL BOXES

A. Mail boxes shall be maintained through the duration of the project in accordance with Section 01000 – General Project Requirements, paragraph MAIL BOXES.

END OF SECTION

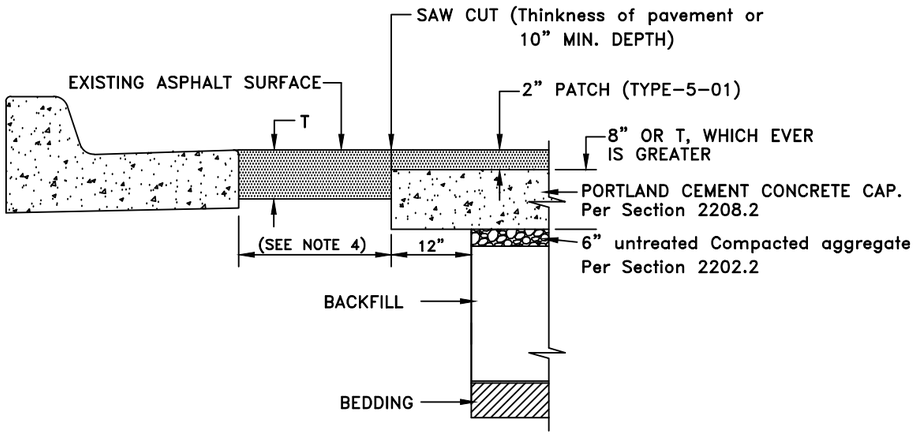

DETAIL 1 – ASPHALT PAVEMENT SURFACE

TYPICAL SECTION

NO SCALE

GENERAL NOTES – All work shall conform to the latest APWA Standard Specifications and Design Criteria, Division II, and Kansas City, Missouri Supplements, Standards and Utility Cut regulations. Excavations shall be protected at all times. Once excavation is made, work shall continue on a workday basis until final restoration is complete. Cuts in roadways shall be plated or temporarily filled and capped with cold mix asphalt when work is not being performed. Trees shall be protected from damage both above and below ground. City Forester at 513-9550 must be contacted when digging within five (5) feet of a tree or when any damage to the tree or a root over three (3) inches occures.

1. EXCAVATIONS – The top dimension of the excavation shall be equal to or greater than the bottom dimension. (All sides of the excavation shall be vertical or lay back greater than vertical before beginning backfill.)

   BELL HOLE EXCAVATIONS – Excavation around underground facilities wider than surface opening will be allowed if the excavation is backfilled within 24 hours with flowable backfill as stated in 3 below. If unable to complete in the time frame, then the unsupported subgrade and pavement shall be removed to meet the provisions of section 1 above.

2. BEDDING – Utility bedding shall be granular bedding meeting 2602, compacted embankment meeting 2602, or flowable fill meeting 2602 unless approved by City. Bedding may extend no greater than 12" above utility. In the downtown loop granular bedding shall not be used.

3. BACKFILL – Backfill shall not be placed in water or mud. Clean graded rock or frozen material shall not be used as backfill. Backfill material and placement shall meet the requirements of 2602.3. Franchise utilities with an approved compaction testing program may perfrom their own compaction test. all other requirements of 2602.3.C must be met.

4. ROADWAY SURFACES – Surfacing shall be of same type of materials as the existing surface. The finished surface shall be flush with the surrounding surface and shall match the slope and contours of the surrounding pavement.

   A. Portland Cement Concrete – (Detail 4)
      If the street cut is in a concrete street, the patch shall extend to the nearest joint in all directions. The patch shall be saw cut and all load transfer devices, expansion joints and reinforcing steel placed prior to placing the new concrete. Concrete shall be placed to the current thickness of pavement or ten (10) inches, whichever is thicker. The concrete must match the color and pattern of the previous pavement.

   B. Asphalt – (DETAIL 1)
      Pavement shall be removed twelve (12) inches beyond the edge of the disturbed subgrade or pavement, whichever is greater. Pavement shall be milled 2" deep and resurfaced for full width of the lane that is cut. Tack coat shall be applied (Section 2204), surface placed and compacted (Section 2205.3) and joints sealed (Section 2206.2). If asphalt is not available at the time repairs are made, concrete may be brought to the surface as a temporary repair. Once asphalt is available, the milling and resurfacing shall be completed.

   C. Other Materials
      - Brick and other paver type materials shall be replaced with matching materials placed over eight (8) inch concrete base similar to DETAIL 1.
      - Oiled crushed rock roads shall have four (4) inches of Type 3 asphaltic concrete placed over a minimum of six (6) inches of untreated compacted aggregate base.
      - Earth or crushed rock roads shall have a minimum of twelve (12) inches of untreated compacted aggregate.
      - All others shall be replaced as directed by the City.

5. OTHER SURFACES (Backfill under all surfaces shall be as shown in details for pavement.)

   A. Sidewalks, Curbs and Driveways – Any section that is cut shall be removed to the nearest joint (Section 2209.3A and 2301.3A). Restoration shall match the existing surface material and joint pattern and shall comply with the appropriate standards.

   B. Grass Areas – Finish to grade with six (6) inch topsoil compacted to 90%. Seed or sod (Section 2400) area as appropriate.

   C. All Other Areas – Replace as directed by the City.

6. MISCELLANEOUS REGULATIONS

   A. Permits are required before working in right-of-way, which must be on site during work.
      1. Excavation Permits: Public Works 513-2670
         Park Dept. (513-7606)
      2. Traffic Control Permit: 513-2670

   B. Notifications required before actual excavation begins:
      1. 2 Working Day Minimum: MO. ONE CALL 1-800-344-7483.
      2. 24-Hour Minimum: Public Works 513-4701.

   C. Permit holder must have inspection of backfill or permit will be void. Contact utility cut inspection section @ 513-4701, fax 513-4717, to request inspection in advance.

   D. Repairs shall match existing street slope and grade, and shall be maintained for three (3) years or bond period .

   E. Any Pavement Markings removed by the repairs must be replaced with like materials.

MISSOURI ONE CALL SYSTEM

1-800-DIG-RITE or 811
(1-800-344-7483)
www.mo1call.com

KANSAS CITY MISSOURI

Director of Public Works Date

Entry No.

Kansas City, Missouri
Public Works Department
Engineering Division

STREET CUT RESTORATION

STANDARD DRAWING NUMBER

SR-1

(PG 1 of 3)

Drawn by J.A.N. Revised Mar. 2017

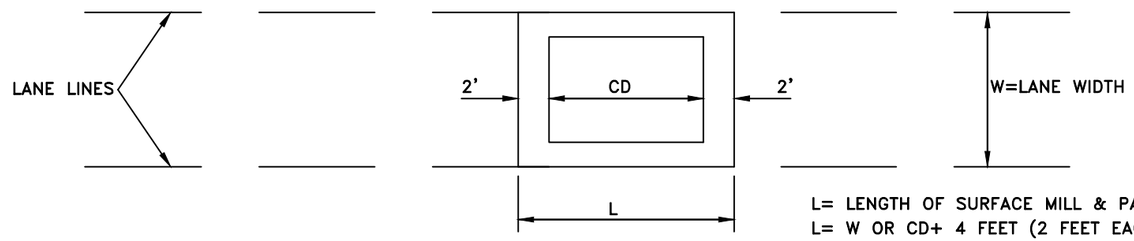

PLAN VIEW

L= LENGTH OF SURFACE MILL & PAVE.
L= W OR CD+ 4 FEET (2 FEET EACH SIDE OF CUT)

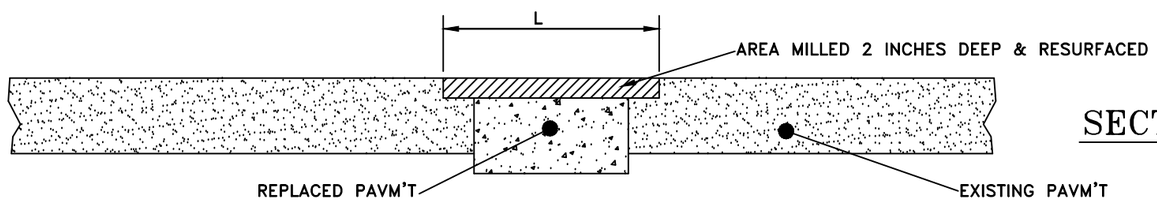

SECTION VIEW

DETAIL 2

NO SCALE

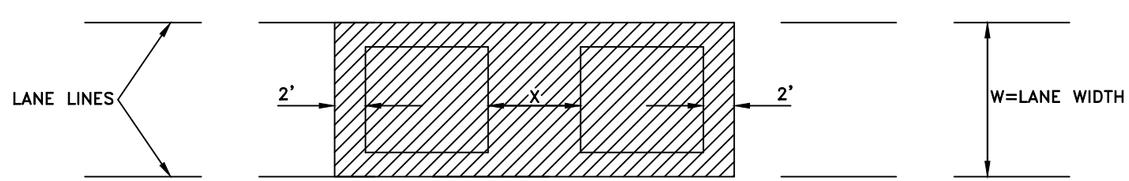

PLAN VIEW

IF DISTANCE X IS LESS THAN W, THEN ENTIRE AREA SHADED WILL BE MILLED & RESURFACED.

DETAIL 3

NO SCALE

E. In asphalt streets, core hole excavations 18 inches in diameter or less may be repaired after proper backifilling, by reinstalling the original surface core. The core must be fully intact and installed with an approved epoxy grout. The finished patch must have all cut lines completely filled with the grout.

7. EXCAVATING IN STREET PAVEMENTS WITHIN TWO YEARS OF CONSTRUCTION OR RESURFACING.

The City will make available its proposed 2-year schedule of street construction and resurfacing to businesses that may require making street cuts. If a street cut is made, for a non-emergency purpose, within 2 years after a street is constructed or resurfaced, the following requirements will apply:

A. Asphalted Surfaced Streets

1. The width and length of the surfaced area shall be as follows:

WIDTH – extend to the full lane width of the affected lane.

LENGTH – extend to the width of the affected lane or the length of the cut plus four feet, whichever is greater.

The area described above shall be milled to a depth of 2 inches and a two-inch thick asphalt surface course shall be placed. This is shown in Detail 2. All lanes affected by the cut shall be milled and resurfaced as stated above.

B. For Concrete Streets

The entire slab shall be removed and replaced to the existing joints.

8. In asphalt streets, when multiple street cuts are separated by less than the width of the affected lane, the lane shall be resurfaced with a single, continuous and contiguous patch. This is shown in Detail 3.

9. EXCAVATING IN PAVED AREA ADJACENT TO A MANHOLE: If pavement is removed adjacent to a casting with a clear opening of 30 inches or less and it does not match the slope and grade of the surrounding pavement, the manhole ring must be replaced with an adjustable manhole ring. All adjustable manhole rings must be adjustable to meet the slope and grade of the pavement from 0 to 17%, and shall be able to be raised and lowered in 1/4 inch increments up to 2 3/4 inches.
The ring and lid shall be rated for H20 traffic. Any casting with a diameter larger than 30 inches must be approved by the Director of Public Works prior to being installed. These casting requirements do not apply to valve castings.

MISSOURI ONE CALL SYSTEM
1-800-DIG-RITE or 811
(1-800-344-7483)
www.mo1call.com

KANSAS CITY MISSOURI

Director of Public Works Date

Entry No.

Kansas City, Missouri
Public Works Department
Engineering Division

STREET CUT RESTORATION

STANDARD DRAWING NUMBER
SR-1
(PG 2 of 3)

Drawn by J.A.N. Revised Mar. 2017

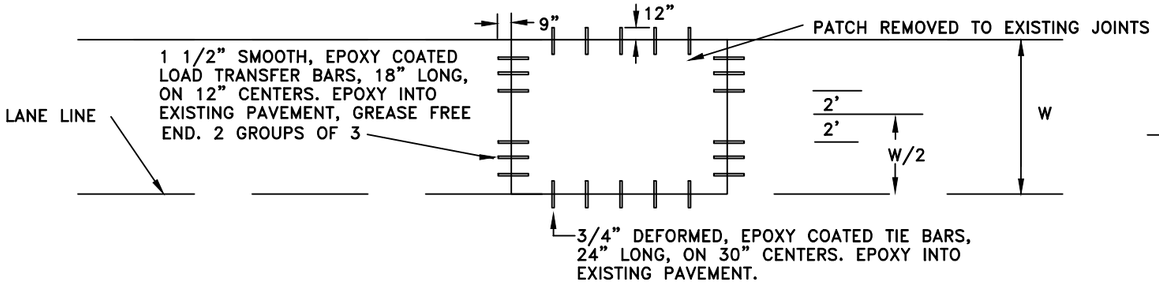

PLAN VIEW

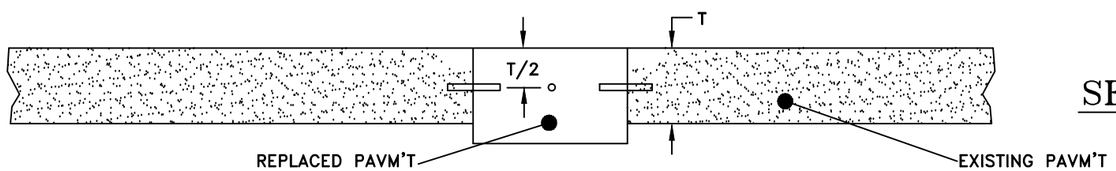

SECTION VIEW

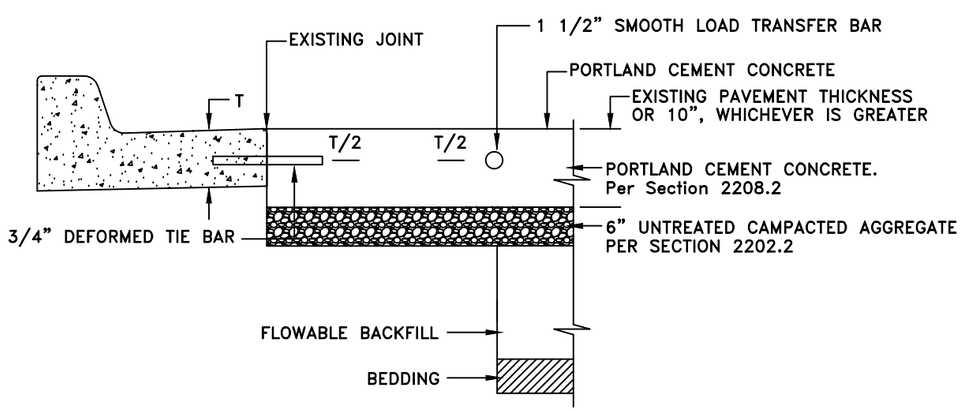

P.C. CONCRETE PAVEMENT SURFACE

DETAIL 4

NO SCALE

10. UTILITY APPURTENANCE SLOPE AND GRADE: All utility appurtenances shall be installed and maintained at a slope and grade that meets the surrounding pavement within 1/4 inch. The slope and grade tolerance shall be measured by placing a 6 foot straightedge across the manhole and masuring the distance between it and the pavement. One end of the straightedge shall be placed on the casting ring and the straightedge shall cross the opposite edge of the ring. This measurement shall be made on both sides in the direction of travel. All appurtenances shall be adjusted to the proper slope and grade prior to any street paving or patching. If adjustments are not completed prior to the street paving or patching, note 7 of this standard shall be applicable.

MISSOURI ONE CALL SYSTEM

1-800-DIG-RITE or 811
(1-800-344-7483)
www.mo1call.com

KANSAS CITY MISSOURI

Director of Public Works Date

Entry No.

Kansas City, Missouri
Public Works Department
Engineering Division

STREET CUT RESTORATION

STANDARD DRAWING NUMBER

SR-1

(PG 3 of 3)

Drawn by J.A.N. Revised Mar. 2017

SECTION 02580 – PIPE BURSTING GRAVITY SEWERS

PART 1 - GENERAL

1.01 SUMMARY

A. This section governs all labor, materials and equipment for the installation of gravity sewer pipe by the trenchless method of bursting existing pipes. The work shall be done as shown on the Drawings and in conformity with these specifications and the contract documents. The operation shall be conducted with a hydraulic or pneumatic pulling or pushing apparatus and a pipe expander or pipe reaming device. The pipe expander or reaming device shall be pushed or pulled through the existing pipe on grade, widening the existing pipe material for the insertion of the new pipe material.

1.02 SPECIFICATION MODIFICATIONS

A. It is understood that throughout this section these Specifications may be modified by appropriate items in Section 01015 – Specific Project Requirements, or as otherwise indicated on the Contract Drawings.

1.03 RELATED SECTIONS

A. Section 01000 – General Project Requirements.
B. Section 01015 – Specific Project Requirements.
C. Section 01300 – Submittals.
D. Section 01581 – Public Communications.
E. Section 02686 – Cleaning and Assessment of Gravity Lines.
F. Section 02702 – Testing Requirements for Sanitary Sewer: Mains and Manholes.
G. Section 03370 – Sanitary Sewer Manhole Construction.

1.04 CODES AND STANDARDS

A. The publications listed below form a part of this specification to the extent referenced. The publications are referred to within the text by the basic designation only.
B. American Society for Testing and Materials (ASTM):

ASTM C923	Standard Specification for Resilient Connectors between Reinforced Concrete Manhole Structures, Pipes, and Laterals
ASTM C1173	Standard Specification for Flexible Transition Couplings for Underground Piping.
ASTM D1248	Standard Specification for Polyethylene Plastics Extrusion Materials for Wire and Cable.
ASTM D2241	Standard Specification for Poly (Vinyl Chloride) (PVC) Pressure-Rated Pipe (SDR Series).
ASTM D2657	Standard Practice for Heat Fusion Joining of Polyolefin Pipe and Fittings
ASTM D2837	Standard Test Method for Obtaining Hydrostatic Design Basis for Thermoplastic Pipe Materials or Pressure Design Basis for Thermoplastic Pipe Products.
ASTM D3350	Standard Specification for Polyethylene Plastics Pipe and Fittings Materials.
ASTM F714	Standard Specification for Polyethylene (PE) Plastic Pipe (DR-PR) Based on Outside Diameter.

ASTM F2620 Standard Practice for Heat Fusion Joining of Polyethylene Pipe and Fittings.

C. Plastics Pipe Institute (PPI):

TR-3 Policies and Procedures for Developing Hydrostatic Design Basis (HDB), Pressure Design Basis (PDB), Strength Design Basis (SDB), and minimum Required Strength (MRS) Ratings for Thermoplastic Piping Materials or Pipe.

1.05 SUBMITTALS

A. Submit as specified in Section 01300 – Submittals.

B. Product Data:
   1. All pipe, fittings, and accessories to be used.
   2. The manufacturer's installation recommendations including the recommended allowable pulling force to prevent damage to the pipe.
   3. If HDPE is used, information indicating the interior color for the HDPE pipe.

C. Installation Procedure:
   1. The Contractor shall submit, in detail, the procedure and the steps to be followed for the installation of the pipe bursting system selected including, but not limited to:
      (a) Traffic control plan.
      (b) Layout, storage, and pipe handling areas.
      (c) Plan for locating, exposing, and reconnecting service laterals.
      (d) Bypass pumping plan.
      (e) Point repair plan for removing sags, offset joints, constrictions, or obstructions.
   2. Any proposed changes in installation procedures shall require submittal of revised procedures and acceptance by the City.

D. Preconstruction Television Inspections (in accordance with Section 02686 – Cleaning and Assessment of Gravity Lines).

E. Post-Construction Television Inspections (in accordance with Section 02686 – Cleaning and Assessment of Gravity Lines).

F. Updated schedule of repairs for the segments included in the contract documents which is to be submitted after the preconstruction CCTV inspections have taken place and the segments reviewed for any modifications to the planned work.

G. Certificates:
   1. Affidavit of compliance with applicable standards.
   2. Test certificates.
   3. As requested, Certificates of Training for the processes used.

1.06 QUALITY ASSURANCE

A. The Contractor is responsible for the quality assurance and quality control of the Work.

B. Work shall be performed by a Contractor, with a proven record of performance for similar installations. Contractor shall submit the following:
   1. Manufacturers shall be experienced in the design and manufacture of pipe, fittings, specials, or appurtenances for a minimum period of 5 years.
   2. Warranty:
      (a) Terms: Standard Manufacturer's warranty.
      (b) Warranty Period: Per the contract documents.

1.07 PRODUCT DELIVERY, STORAGE AND HANDLING

A. Pipe, fittings, and accessories shall be handled and stored in a manner that will ensure installation in sound, undamaged condition and as recommended by the manufacturer.
B. Equipment, tools, and methods used in handling and installing pipe and fittings shall not damage the pipe and fittings.
C. Keep interior of pipes and fittings free of dirt and debris.
D. Handle pipe, fittings, and other accessories in such manner as to ensure delivery to the trench in sound undamaged condition. Carry or use slings or other approved devices designed to protect the pipe. Do not drag pipe unless approved by the City/Design Professional as part of the pulling plan for the HDPE pipe.
E. See also Section 01000 – General Project Requirements for product handling and storage requirements.

1.08 PUBLIC COMMINICATIONS

A. Public communications shall be conducted in accordance with Section 01581 – Public Communications.

PART 2 - PRODUCTS

2.01 HIGH DENSITY POLYETHYLENE (HDPE) PIPE

A. HDPE pipe for trenchless sewer line replacement shall be solid wall high density polyethylene (HDPE) pipe, meeting the requirements of ASTM F714, ASTM D1248, and ASTM D3350.
B. The pipe shall be manufactured from high density high molecular weight polyethylene resin and shall meet or exceed the requirements of ASTM D3350 for PE4710 material with a cell classification of 445474C, or better.
C. The minimum wall thickness of the HDPE shall meet the following:

Table 1. Minimum Wall Thickness

Trench Depth	Minimum SDR
0 – 15 feet	17
> 15 feet	15.5

D. The pipe shall have sufficient strength to withstand both service and installation loads.
E. The pipe and fitting manufacturer shall certify that samples of their production pipe have undergone stress regression testing, evaluation, and validation in accordance with ASTM D2837 and PPI TR-3. Under these procedures, the minimum hydrostatic design basis shall be certified by the pipe manufacturer to be 1600 psi at 73°F and 800 psi at 140°F.

2.02 RESTRAINED JOINT PVC PIPE

A. Approved PVC pipe for trenchless sewer line replacement includes:
   1. CertaFlo™
   2. Certa-Loc™

B. Pipe manufacturer shall certify the pipe provided meets the requirements of ASTM D2241 and is made of PVC plastic having a minimum cell classification of 12454 as defined in ASTM D1784.
C. The pipe shall have a minimum wall thickness meeting or exceeding SDR 26.
D. The pipe shall have sufficient strength to withstand both service and installation loads.

2.03 NON-SHRINK GROUT

A. Non-shrink grout shall be used in accordance with Section 03370 – Sanitary Sewer Manhole Construction.

2.04 MANHOLE ADAPTERS

A. Manhole adapters for pipes between 4 and 12 inches in diameter shall be Fernco Concrete Manhole Adapter or approved equal.
B. Manhole adaptors for pipes greater than 12 inches in diameter shall be as specified in Section 01015 – Specific Project Requirements.

2.05 RE-ESTABLISHMENT OF SERVICE CONNECTIONS

A. Saddles:
   1. HDPE Pipe:
      (a) Heat fusion saddles shall be made of polyethylene pipe that meets the minimum specified physical properties and is suitable for fusion welding.
      (b) Fusion saddles shall be Branch Saddle as manufactured by Driscopipe, Miller, DuPont, or approved equal.
   2. PVC Pipe:
      (a) Fitting shall consist of a PVC hub, rubber sleeve and stainless-steel band as manufactured by Inserta Tee®, GPK Products or approved equal.
      (b) Saddle fitting with an elastomeric ring gasketed bell-end service connection, a minimum wall thickness of SDR 26, a rubber sealing gasket, and with stainless steel straps for connection to the pipe.
B. Compression Fit Connection:
   1. The connection shall be specifically designed for connection to the sewer main being installed.
   2. Service connection shall consist of a PVC hub, rubber sleeve and stainless steel band. Rubber sleeve and gasket shall meet the requirements of ASTM F 477. Gaskets shall be installed by the manufacturer. The water-based solution provided by the manufacturer shall be used during assembly. Do not use pipe lube.
   3. Connection shall be Inserta Tee as manufactured by Inserta Fittings Co. or approved equal.
C. Non-Shear Flexible Coupling:
   1. Connections to existing service laterals shall be made using Non-Shear flexible couplings.
   2. All flexible couplings shall conform to ASTM C1173 and shall be as manufactured by Fernco Inc., MaxAdaptor or approved equal.

PART 3 - EXECUTION

3.01 INSTALLATION PROCEDURE

A. The Contractor shall submit, in detail, the procedure and the steps to be followed for the installation of the pipe bursting system selected, including location of insertion and launching pits, even if the process is named in the specification. All such instructions and procedures submitted shall be carefully followed during installation. Any proposed changes in installation procedures shall require submittal of revised procedures and acceptance by the City.

3.02 PIT LOCATIONS

A. Location and number of insertion or launching pits will be chosen by the Contractor and will typically be located near existing or proposed manholes, P.I.'s in the line, at logical breaks in the construction phasing, or at locations to comply with access or maintenance requirements.

3.03 EQUIPMENT

A. The Contractor shall utilize pipe bursting equipment with adequate pulling/pushing force to complete pulls in a timely manner. The Contractor shall provide equipment on the pulling mechanism to verify the pulling/pushing force exerted on the pipe does not exceed the manufacturer's recommendation for allowable pulling force to prevent damage to the pipe. Where the actual pulling force exceeds the allowable pulling force the Contractor shall take steps to reduce the pulling force necessary by either oversizing the cut or lubricating the outside pipe surface.

3.04 MINIMIZE NOISE IMPACTS

A. Means and methods should be employed and described in appropriate submittals to ensure that work of a high decibel volume is performed away from business and/or residential properties to the best extent possible. Such description shall include times and durations that are compatible with the neighborhood in which the work is being performed. No such work will be performed in the late afternoon, early evening or weekends unless described, submitted and approved in advance on projects that work outside of usual and customary hours has been previously approved.

B. Provide silencers or other approved devices to reduce machine noise, when it exceeds regulated limits.

3.05 PROTECTION

A. The Contractor shall provide protection for the general safety of workers, pedestrians and traveling public throughout this project. Existing surface improvements and underground facilities and utilities shall be the contractor's responsibility to protect and/or support. Damage caused by the Contractor shall be repaired at no expense to the City. Protection to be provided includes, but is not limited to:

1. Barricades, warning lights and signs for excavations.
2. The Contractor shall install all pulleys, rollers, bumpers, alignment control devices and other equipment to protect existing manholes, and to protect the pipe from damage during installation. Lubrication may be used as recommended by the manufacturer. Under no circumstances shall the pipes be stressed beyond their elastic limit.
3. Do not allow sand, debris, or runoff to enter sewer system.

4. Verify location of all underground utilities and facilities potentially impacted by rehabilitation or other activities and take necessary precautions to provide protection from damage. Damage caused by Contractor shall be Contractor's responsibility and repaired at Contractor's own expense, and at no additional cost to the City.
5. Protect the new pipe and components during all phases of work, including hauling, installation, entry into the launching pit, and prevention of scarring or gouging of the pipe or components.

3.06 TELEVISION INSPECTION

A. The Contractor shall video (CCTV) inspect the sewer pipe, in accordance with Section 02686 – Cleaning and Assessment of Gravity Lines.
B. Preconstruction Television Inspection: Pipe shall be inspected immediately prior to pipe bursting to verify the existing pipe conditions are acceptable for pipe bursting and to locate and verify all active service line connections. If existing pipe conditions are not acceptable for pipe bursting, contact the City. If there is a sag in the existing line, see paragraph SAGS IN LINE below.
C. Post-Construction Television Inspection: Contractor shall inspect the pipe after pipe bursting to locate and verify that all active service line connections were re-established.
D. Preconstruction and Post-Construction Television Inspection documentation shall be submitted for review and acceptance of the Work.

3.07 SEWAGE BYPASS

A. When required for acceptable completion of pipe bursting, the Contractor shall provide for continuous sewage flow around the section(s) of pipe designated for the installation of replacement pipe. The pump and bypass lines shall be of adequate size and capacity to handle the flow.

3.08 SAGS IN LINE

A. If the Pre-Inspection CCTV reveals an unidentified sag in the existing sewer, the Contractor shall inform the City and request direction. The City may require the Contractor to eliminate the sag and install new pipe at a uniform grade prior to pipe bursting the remaining portion of the pipe segment. If the sag has been identified in the Contract Documents, the Contractor shall address the sag as directed in the Contract Documents prior to pipe bursting.
B. If Post-installation video (CCTV) inspection reveals a sag in the new line where none existed prior to the Work being performed, the Contractor shall remove or repair the sag at no additional cost to the City.

3.09 SERVICE LATERALS AND CONNECTIONS

A. Existing service connections shall be located and exposed before initiating sewer main replacement operations. All service laterals attached to the existing sewer shall be completely disconnected and isolated from the existing sewer before the pipe bursting operations. Service laterals shall not be reconnected to the new sewer line until the new line is installed. Any services remaining off line for more than 12 hours, or any connections deemed necessary by the City to protect the customer, shall be bypass pumped until such time that they can be reconnected.
B. Reconnection of service laterals to the installed pipe shall be accomplished using an approved method.

3.10 PIPE JOINING

A. HDPE Pipe:

1. The HDPE pipe shall be assembled and joined at the site using the butt-fusion method conforming to ASTM D2657 to provide a leak proof joint. All equipment and procedures used shall be used in strict compliance with the manufacturer's recommendations. Fusing shall be accomplished by personnel certified as fusion technicians by a manufacturer of HDPE pipe and/or fusing equipment.
2. The butt-fused joint shall be in true alignment and shall have uniform roll-back beads resulting from the use of proper temperature and pressure. The joint shall be allowed adequate cooling time before removal of pressure. The fused joint shall be watertight and shall have tensile strength equal to or greater than that of the pipe.
3. All internal beads shall be removed after the cooling time using a suitable bead removal tool. Use of the bead removal tool shall not induce any slits, gouges or defects in the pipe wall. The beads shall be bent back at several positions. No evidence of the bead splitting shall be seen. If the bead is seen to split at any point, then the joint shall be cut from the pipeline and remade. If a similar defect recurs, all further production jointing shall cease until the equipment has been thoroughly cleaned and examined. New trial joints shall be made and shown to be satisfactory.
4. All defective joints shall be cut out and replaced at no additional cost to the City. All joints shall be subject to acceptance by the City and/or his representative prior to insertion. Any section of the pipe with a gash, blister, abrasion, nick, scar, or other deleterious fault greater in depth than ten percent (10%) of the wall thickness, shall not be used and must be removed from the site. However, a defective area of the pipe may be cut out and joint fused in accordance with the procedures stated above. In addition, any section of the pipe having other defects such as concentrated ridges, discoloration, excessive spot roughness, pitting, variable wall thickness or any other defect of manufacturing or handling as determined by the City and/or his representative shall be discarded and not used.
5. The wall color of the interior pipe surfaces shall be light green or other color approved by the City so that a clear detail examination with CCTV inspection equipment may be made. Product data indicating the interior color to be used shall be submitted for review and approval.

B. PVC Pipe:

1. PVC shall be joined and assembled as recommended by the manufacturer of the pipe.

C. Where excavations for the insertion of the replacement pipe are made between two manholes, the ends of the pipe will be cut smooth and square to the axis of the pipe so that it can be joined in a manner such that the gap between pipe ends does not exceed one-half (1/2) inch. A Fernco coupling or a full circle repair clamp with a minimum width of 12 inches (Smith-Blair or approved equal) shall be used. The butt-fusion method of pipe joining may be used as well for HDPE pipe.

3.11 HDPE PIPE RELAXATION AND COOLING

A. The installed pipe shall be allowed the manufacturer's recommended amount of time, but not less than four (4) hours, for cooling and relaxation due to tensile stressing prior to any reconnection of any service lines, sealing of the annulus or backfilling of

the insertion pit. Four (4) inches to eight (8) inches of excess length of new pipe shall be allowed to protrude into the manhole.

3.12 MANHOLE SEALING

A. Existing Manholes:
   1. A manhole adapter shall be placed circumferentially on the replacement pipe and encased with a non-shrink grout to prevent infiltration into the manhole.
   2. The manhole adapter shall be installed in accordance with manufacturer's recommendations.
   3. Non-shrink grout shall be installed in accordance with Section 03370 – Sewer Manhole Construction.

B. New Manholes:
   1. Where new manholes are installed in conjunction with pipe bursting, the manhole shall be sealed in accordance with Section 03370 – Sanitary Sewer Manhole Construction.

3.13 FIELD QUALITY CONTROL

A. Prior to service line reinstatement, all pipelines shall be tested in accordance with Section 02702 – Testing Requirements for Sanitary Sewer: Mains and Manholes.

B. If air testing is not possible, the Contractor shall notify the City for further direction.

END OF SECTION

SECTION 02620 – DUCTILE IRON PIPE FOR SEWERS

PART 1 - GENERAL

1.01 SUMMARY

A. This section covers materials and installation of pipe, fittings and relevant appurtenances associated with the installation of ductile iron pipe sewers. This section applies to all sewer mains 54 inches in diameter and smaller. This section also applies when diameters larger than 54 inches is specified for the project.

B. This section also includes Shop Coatings, Linings, Bolts, Nuts, Polyethylene Encasement and other Protective Coatings.

1.02 SPECIFICATION MODIFICATIONS

A. It is understood that throughout this section these Specifications may be modified by appropriate items in Section 01015 – Specific Project Requirements or as otherwise indicated on the Contract Drawings.

1.03 RELATED SECTIONS

A. Section 01000 – General Project Requirements.
B. Section 01015 – Specific Project Requirements.
C. Section 01300 – Submittals.
D. Section 02200 – Earthwork.
E. Section 02250 – Trenching, Pipe Embedment and Backfill.
F. Section 02669 – Thrust Restraints.

1.04 CODES AND STANDARDS

A. The publications listed below form a part of this specification to the extent referenced. The publications are referred to within the text by the basic designation only.

B. American Society for Testing and Materials (ASTM):

ASTM A276	Standard Specification for Stainless Steel Bars and Shapes
ASTM A307	Standard Specification for Carbon Steel Bolts and Studs, 60,000 psi Tensile
ASTM A746	Standard Specification for Ductile Iron Gravity Sewer Pipe
ASTM D4976	Standard Specification for Polyethylene Tubing.

C. American National Standards Institute (ANSI):

ANSI B18.2.2	Nuts for General Applications: Machine Screw Nuts, Hex, Square, Hex Flange, and Coupling Nuts (Inch Series).

D. American Water Works Associations (AWWA):

AWWA C105/ANSI A21.5	Polyethylene Encasement for Ductile Iron Piping
AWWA C110/ANSI A21.10	Gray-Iron and Ductile Iron Fittings
AWWA C111/ANSI A21.11	Rubber-Gasket Joints for Cast Iron and Ductile Iron Pressure Pipe and Fittings
AWWA C115/ANSI A21.15	Flanged Ductile-Iron Pipe with Ductile Iron or Gray Iron Thread
AWWA C150/ANSI A21.50	Standard for the Thickness Design of Ductile Iron Pipe
AWWA C151/ANSI A21.51	Ductile Iron Pipe Centrifugally Cast for Water
AWWA C153/ANSI A21.53	Ductile-Iron Compact Fittings, 3 in. through 24 in.

AWWA C203	Standards for Steel Pipe
AWWA C550	Protective Epoxy Interior Coatings for Valves and Hydrants
AWWA C600	Installation of Ductile Iron Water Mains and their Appurtenances.

E. International Organization for Standardization (ISO):

ISO 8179-1	Ductile Iron Pipes, Fitting, Accessories and their Joints – Zinc-Bases Coating – Part 1: Metallic Zinc with Finishing Layer.

1.05 INFORMATION PROVIDED BY THE CITY

A. As provided in the Contract Documents.

1.06 SUBMITTALS

A. Submit as specified in Section 01300 – Submittals.
B. Shop Drawings:
   1. Submit shop drawings and project data (laying schedule) for piping work showing pipe and fitting sizes, valve locations, joint details; and hydrant locations.
C. Product Data:
   1. Pipe Data. In accordance with paragraph QUALITY ASSURANCE.
   2. Test Data. In accordance with paragraph QUALITY ASSURANCE.
   3. Polyethylene Encasement.
   4. Push On Joints.
   5. Mechanical Joints.
   6. Flanged Joints.
   7. Appurtenances:
      (a) Tie rods.
      (b) Couplings.
   8. Interior Coatings.
   9. Exterior Coatings.
   10. Bolts and Nuts.
   11. Polyethylene Encasement.
D. Other Submittals:
   1. Manufacturer's Experience. In accordance with paragraph QUALITY ASSURANCE.

1.07 QUALITY ASSURANCE

A. Follow provisions of AWWA C600.
B. Manufacturer's Experience. The manufacturer shall be a company specializing in manufacturing the Products specified in this section with minimum three years documented experience. Submit manufacturer's experience in accordance with paragraph SUBMITTALS.
C. Mark rejected or defective materials and remove them from the work site.
D. The Contractor shall submit to the City written evidence of the following:
   1. Pipe Product Data. That the pipe furnished under this specification is in conformance with the material and mechanical requirements specified herein.
   2. Test Data. Certified copies of independent laboratory test results or mill test results from the pipe supplier may be considered evidence of compliance provided such tests are performed in accordance with the appropriate ASTM or AWWA testing standards by experienced, competent personnel. Pipe manufacturer's test results shall be stamped by a licensed Professional Engineer (PE) employed by the pipe manufacturer. In case of doubt

as to the accuracy or adequacy of mill tests, the City may require that the Contractor furnish test reports from an independent testing laboratory on samples of pipe materials.

E. The City will inspect all pipe, fittings, and accessories delivered to the site for damage, cleanliness, and conformance to the specifications. No damaged, broken, cracked, deformed, mishandled, imperfectly coated, defective pipe or fittings shall be used. At the sole discretion of the City and at no additional cost to the City, items that are not acceptable shall either be repaired or completely removed from the site.

1.08 PRODUCT DELIVERY, STORAGE AND HANDLING

A. Follow the provisions for the delivery, storage, protection and handling products to and at site provided in Section 01000 – General Project Requirements, paragraph PRODUCT DELIVERY, STORAGE AND HANDLING.

B. Pipe, fittings, and accessories shall be handled in a manner that will ensure installation in a sound, undamaged condition. Equipment, tools, and methods used in unloading, reloading, hauling, and laying pipe and fittings shall be such that the pipe, pipe coating, and fittings are not damaged. Hooks shall not be used.

C. Under no circumstances shall pipe or accessories be dropped or dumped.

D. Pipe and fittings shall not be moved by inserting anything into pipe ends.

E. Pipe and fittings on which the lining has been damaged shall be replaced at no additional cost to the City.

F. Where the damaged areas are small and readily accessible, the lining may be permitted to be repaired in accordance with the lining manufacturer's recommendations at no additional cost to the City.

1.09 ADDITIONAL COMPLIANCE SUBMITTALS

A. Additional requirements for compliance submittals will be found in Section 01015 – Specific Project Requirements.

PART 2 - PRODUCTS

2.01 DUCTILE IRON PIPE

A. Ductile iron pipe shall be designed and manufactured in accordance with AWWA C151/A21.51.

B. All pipe shall be manufactured from at least 90% recycled ferrous scrap material.

C. Pipe Thickness:

1. Pipe thickness shall be in accordance with AWWA C150/ANSI A21.50. The following minimum thickness shall apply:
   (a) Pipe 4 inches through 12 inches in diameter: Class 52.
   (b) Pipe 16 inches through 54 inches diameter: Class 54.
2. Pipe thickness classifications shall be as noted on the Drawings.

D. Exterior Coating:

1. The exterior of ductile iron pipe (not including fittings) shall be coated with a layer of arc-sprayed zinc conforming to ISO 8179-1.
2. The mass of the zinc applied shall be 200 g/m^2 of pipe surface area.
3. A finishing layer topcoat shall be applied to the zinc.
4. The mean dry film thickness of the finishing layer shall not be less than 3 mils with a local minimum not less than 2 mils.
5. The manufacturer shall clearly mark the outside of each pipe indicating the pipe has been coated in accordance with these specifications.

E. Interior Coating/Lining:
   1. All pipe shall be lined with TNEMEC Series 431 Perma-Sheild ® PL.

2.02 PUSH ON JOINTS

A. Pipe joints shall be of the push-on type unless otherwise specified or as shown on the Drawings.
B. Joints shall conform to ANSI/AWWA C111/A21.11.
C. Gaskets shall be neoprene or synthetic rubber. Gaskets shall be certified as suitable for wastewater use. Natural rubber will not be acceptable.
D. Restrained Joints. See Section 02669 – Thrust Restraints.

2.03 TESTING

A. All pipe shall be tested and documented per AWWA C151 and paragraph 1.07 D.2 defined herein.
B. All pipe 30” and larger shall also be hydrostatically tested to 75% of the yield strength of the metal based on the nominal thickness of the pipe.

2.04 FITTINGS

A. All fittings shall be made of Ductile Iron and manufactured according to AWWA C110/ANSI A21.10 or AWWA C153/ANSI A21.53.
B. Fitting joints shall be Mechanical Joint (MJ), Flange Joint (FLG), or Push-On Joint, per AWWA C111/ANSI A21.11. All MJ glands shall be ductile iron. Fittings shall have distinctly cast upon them, the pressure rating and the letters “DI” or “Ductile”. FLG Fittings shall be used only for aboveground installations.
C. Flanged Joints: Shall be provided with full-face gaskets and shall meet the requirements of AWWA C115/ANSI A21.15.
D. The exterior of fittings shall be coated with a layer of arc-sprayed zinc conforming to ISO 8179-1 or a zinc-rich primer conforming to ISO 8179-2. A finishing layer topcoat shall be applied to the zinc.
E. All fittings shall be interior coated/lined with TNEMEC Series 431 Perma-Sheild ® PL.

2.05 GLANDS AND OTHER APPURTENANCES

A. All glands shall have a polyester triglycidyl isocyanurate (TGIC) powder coating or an approved equal applied for corrosion protection. See also Section 02669 – Thrust Restraints.
B. Tie Rods shall be ASTM A276, Type 304 or Type 316 Stainless Steel.
C. Couplings (when approved for use by the City) shall be:
   1. Dresser “Style 38”.
   2. Smith-Blair “441 or 411 Flexible Coupling”; without pipe stop.
   3. Bolted compression type couplings shall be manufactured of epoxy coated steel or ductile iron specifically for use with ductile iron pipe.

2.06 TEE-BOLTS AND NUTS

A. Tee-Bolts shall be manufactured with high-strength, low-alloy steel in accordance with AWWA C111 and ASTM A307, with chamfered or rounded ends projecting 1/4 to 1/2 inch from surface.
B. Nuts shall be hexagonal manufactured in accordance with ASTM A307 and ANSI B18.2.2.
C. Provide ceramic-filled, baked-on, fluorocarbon resin coating for tee-bolts and nuts.
D. Include factory-applied lubricant that produces a low coefficient of friction for the ease of installation.

2.07 MARKINGS

A. Markings shall be legibly cast in the pipe or painted thereon with waterproof paint.

2.08 POLYETHYLENE ENCASEMENT

A. Polyethylene encasement materials shall be in accordance with ASTM D4976 and AWWA C105/ANSI A21.5.

B. The Contractor may use either Linear Low Density (LLD), High Density Cross Laminated (HDCL) or V-Bio® Enhanced Polyethylene film with the minimum properties indicated in Table 1 below:

Table 1. Minimum Requirements for Polyethylene Encasement

Item	LLD	HDCL	V-Bio®
Thickness, mil	12	4	8
Tensile Strength, psi	4,400	6,300	3,600
Elongation, percent	1,000	100	700
Dielectric Strength, v/mil	1,900	800	800
Tear Resistance, gf	4,400	250	2,550
Impact Resistance, g	1,100	800	600

C. Polyethylene encasement shall be provided in tubes. Sheeting is not allowed. The minimum tube size for each pipe diameter shall be in accordance with Table 2.

Table 2. Polyethylene Flat Tube Width (inches)

Nominal Pipe Diameter (inches)	Push-on Bell & Spigot Joints	Mechanical Joints
4	14	16
6	17	20
8	21	24
10	25	27
12	29	30
14	33	34
16	37	37
18	41	41
20	45	45
24	53	53
30	67	67
36	81	81
42	81	81

Table 2. Polyethylene Flat Tube Width (inches)

Nominal Pipe Diameter (inches)	Push-on Bell & Spigot Joints	Mechanical Joints
48	95	95
54	108	108

D. Color: The color of polyethylene encasement shall be green.
E. Adhesive Tape: Adhesive tape shall be a general purpose adhesive tape 1-inch wide and approximately 8 mils thick, such as Scotch Tape No. 50, Polyken No. 900, Tape coat CT or approved equal (duct tape is not allowed).
F. Sheeting is permitted for use on point repairs under 12 foot in length. All point repairs 12 foot and longer shall use tubing.

PART 3 - EXECUTION

3.01 INSPECTION

A. Pipe and fittings shall be carefully examined for cracks and other defects immediately before installation.
B. Spigot ends shall be examined with particular care since they are vulnerable to damage from handling.
C. All defective, damaged, or unsound pipe or fittings shall be rejected and marked as such and removed from the Site.

3.02 PREPARATION

A. Cutting Pipe:
   1. Cutting shall be done in a neat manner without damage to the pipe or the cement lining. Cuts shall be smooth, straight, and at right angles to the pipe axis.
   2. After cutting, the end of the pipe shall be dressed with a file to remove all roughness and sharp corners.
   3. Cutting of pipe with a torch will not be permitted.
B. Cleaning:
   1. The interior of all pipe and fittings shall be thoroughly cleaned of foreign matter before being installed and shall be kept clean until the work has been accepted.
   2. Surfaces shall be wire brushed, if necessary, wiped clean, and kept clean until jointing is completed.

3.03 LAYING PIPE

A. Runs intended to be straight shall be laid straight.
B. Deflections from a straight line or grade shall not exceed the maximum joint deflections for full length pipe as stipulated in AWWA C600. Shorter pipe sections or special bends shall be installed where the alignment or grade requires them.
C. Pipe shall be protected from lateral displacement by pipe embedment material installed as specified in Section 02250 – Trenching, Pipe Embedment and Backfill.
D. Under no circumstances shall the pipe be laid in water; and no pipe shall be laid in unsuitable trench conditions.

E. Pipe shall be laid with the bell ends facing the direction of laying except when reverse laying is specifically authorized by the City.
F. Whenever pipe laying is stopped, the open end of the line shall be sealed with a watertight plug that will prevent groundwater and other debris from entering the pipe.
G. No pipe length less than 18 inches in length shall be used.

3.04 MECHANICAL JOINTS

A. After proper joint cleaning, the gasket and gland shall be in position on the spigot before shoving the pipe to its final position. Center the entering spigot so that the gland or follower ring is parallel to the face of the connecting bell.
B. Joint shall be shoved "home" and the gland properly positioned with respect to the connecting bell with the connecting pipes in as nearly perfect alignment as practicable.
C. The bolts shall be slightly and uniformly tightened.
D. Deflection may be made after the bolts are tightened.
E. Coat the gasket with a lubricant supplied by the pipe manufacturer and all surfaces of the bell, spigot, and gland that will come in contact with the gasket at any time during assembly.
F. Gasket shall be carefully pushed into position and evenly seated in the bell. The gland shall be shoved into place against the gasket, the bolts inserted, and the nuts tightened with the fingers until snug. Final tightening of the bolts shall be done with a ratchet torque wrench.
G. Partially tighten the bottom bolt, then the top bolts, alternately either side, and finally the remaining bolts, alternately tightening bolts 180 degrees apart. This cycle is then to be repeated until all bolts are tightened to the torque specified by the manufacturer:

5/8” bolts --- 40 to 60-foot pounds
3/4” bolts --- 60 to 90-foot pounds

H. If sealing is not maintained at the torque specified, the joint shall be disassembled, thoroughly cleaned, and reassembled. Overstressing of bolts to compensate for poor installation practice will not be permitted.

3.05 PUSH-ON JOINTS

A. Wipe the gasket seat clean with a cloth and position in place. Coat the gasket with a lubricant supplied by the pipe manufacturer. Apply to all of the inner surface of the gasket that will come into contact with the entering pipe.
B. Clean the plain end of the pipe and apply a thin film of lubricant to the outside of the plain end of the pipe and its beveled edge. Align the plain end of the pipe with the bell of the pipe to which it is to be joined. The joint deflection angle should not exceed the recommended maximum of the manufacturer.
C. Bring the plain end of the pipe in contact with the gasket and exert sufficient force on the entering pipe so that its plain end compresses the gasket and makes contact with the base of the socket of the bell. This force can be applied by means of a jack type tool, backhoe, or other methods approved by the City.

3.06 FLANGED JOINTS

A. When bolting, care shall be taken to provide uniform gasket compression and prevent unnecessary stress on the flanges. Flange shall be free to move in any direction while the flange bolts are being tightened. Bolts shall be tightened gradually and at a uniform rate to provide uniform gasket compression.
B. Use full-face gaskets only.

3.07 RESTRAINED JOINTS

A. Restrained joints shall be installed in accordance with the pipe manufacturer's recommendations.
B. All joints within utility casings shall be restrained joints.

3.08 POLYETHYLENE ENCASEMENT

A. Polyethylene encasement shall be installed on all ductile iron pipe, fittings and appurtenances. The polyethylene shall be installed in a manner to prevent contact between the pipe, fittings, and the surrounding embedment.
B. The polyethylene encasement shall be installed as shown on the Construction Detail No. 02620-1 and as follows:
   1. Polyethylene encasement tubing shall be approximately two (2) feet longer than the length of the pipe section to provide a one (1) foot of overlap on each adjacent pipe section.
   2. Repair rips, punctures, or other damages to the polyethylene encasement with adhesive tape or with a short length of polyethylene tube cut open, wrapped around the pipe, and secured with adhesive tape as directed by the City.
C. Bolted Connections: All bolted connection shall by protected by 2 layers of polyethylene encasement. A minimum of 6 inches of overlap is required on each side of the connection.
D. Pipe-Shaped Appurtenances: Bends, reducers, offsets, and other pipe-shaped appurtenances shall be covered with polyethylene in the same manner as the pipe.
E. Odd-Shaped Appurtenances:
   1. Valves, tees, crosses, and other odd-shaped pieces that cannot practically be wrapped in a tube shall be wrapped with a flat sheet or split length of polyethylene encasement tube.
   2. The sheet shall be passed under the appurtenance and brought up around the body.
   3. Seams shall be made by bringing the edges together, folding over twice, and taping down.
   4. Tape polyethylene encasement securely in place at overlaps, valve tops and all other penetrations.
F. Lifting devices shall not be placed over polyethylene.
G. Polyethylene shall be protected from exposure to weather or damage at all times.
H. Openings in Encasement:
   1. Openings for branches or other appurtenances shall be made by making an x-shaped cut in the polyethylene and temporarily folding the film back.
   2. After the appurtenance is installed, tape the slack securely to the appurtenance and repair the cut as well as any other damaged areas in the polyethylene with tape.
   3. The new appurtenance shall be wrapped.
I. Junctions between Wrapped and Unwrapped Pipe:
   1. Where polyethylene wrapped pipe joins an existing pipe which is not wrapped, extend the polyethylene tube to cover the unwrapped pipe a distance of at least three feet.
   2. Secure the end with three circumferential turns of tape.

DETAIL 02620-1 ON NEXT PAGE

DETAIL 02620-1

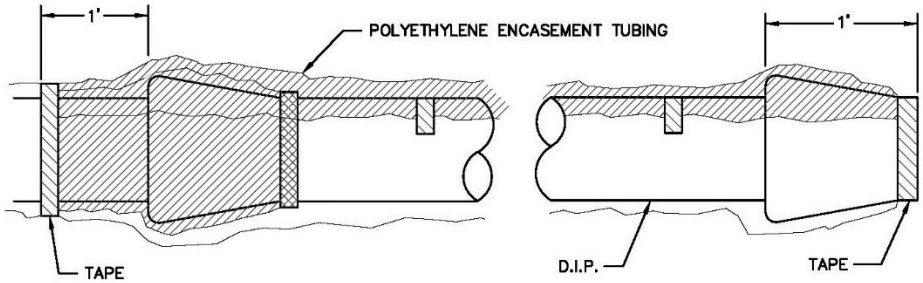

NOTES:

1. TAPE IN ACCORDANCE WITH AWWA C105

POLYETHYLENE ENCASEMENT
FOR DIP SEWERS

WATER SERVICES
CITY OF KANSAS CITY, MISSOURI
DRAWING NO. 02620-1

DEVELOPED BY: TECHNICAL ADVISORY COMMITTEE
APPROVED BY:
DATE: 1/22/2021

1 OF 1

END OF SECTION

SECTION 02624 – POLYVINYL CHLORIDE (PVC) GRAVITY SEWER PIPE

PART 1 - GENERAL

1.01 SUMMARY

A. This section covers all work, materials and testing for the installation of PVC gravity sewer pipe by the open-cut method as shown on the Drawings and in conformity with these specifications. All pipelines shall be constructed to proper line and grade as shown on the Drawings and shall result in an unobstructed, smooth and uniform conduit.

B. This section does not cover PVC pipe associated with pipe bursting. See Section 02580 – Pipe Bursting for Gravity Sewers.

1.02 SPECIFICATION MODIFICATIONS

A. It is understood that throughout this section these Specifications may be modified by appropriate items in Section 01015 – Specific Project Requirements or as otherwise indicated on the Drawings.

1.03 RELATED SECTIONS

A. Section 01015 – Specific Project Requirements.
B. Section 01300 – Submittals.
C. Section 02250 – Trenching, Pipe Embedment and Backfill.
D. Section 02580 – Pipe Bursting for Gravity Sewers.
E. Section 02702 – Sewer Pipe and Manhole Testing.

1.04 CODES AND STANDARDS

A. The publications listed below form a part of this specification to the extent referenced. The publications are referred to within the text by the basic designation only.

B. American Society for Testing and Materials (ASTM):
   1. D2321 – Standard Practice for Underground Installation of Thermoplastic Pipe for Sewers and Other Gravity-Flow Applications.
   2. D2412 – Standard Test Method for Determination of External Loading Characteristics of Plastic Pipe by Parallel-Plate Loading.
   3. D3034 – Standard Specification for Type PSM Poly (Vinyl Chloride) (PVC) Sewer Pipe and Fittings.
   4. D3212 – Standard Specification for Joints for Drain and Sewer Plastic Pipes Using Flexible Elastomeric Seals.
   5. F477 – Standard Specification for Elastomeric Seals (Gaskets) for Joining Plastic Pipe.
   6. F679 – Standard Specification for Type PSM Poly Vinyl Chloride (PVC).

1.05 SUBMITTALS

A. Submit as specified in Section 01300 – Submittals.
B. Shop Drawings and Laying Schedule as required by City/Design Professional.
C. Product Data:
   1. Submit manufacturer's product data for all pipe, fittings and accessories to be used.
   2. Manufacturer's report of the test results.

3. A manufacturer's certification shall be submitted indicating that the pipe and fittings were manufactured, sampled, tested and inspected in accordance with this specification and meet the minimum requirements. Each certification furnished shall be signed by an authorized agent of the manufacturer.

1.06 QUALITY ASSURANCE

A. The Contractor is responsible for the quality assurance and quality control of the Work.

B. Manufacturer:

1. Certification of the minimum experience requirements. A minimum of five (5) years' experience in the design, manufacture and commercial supplying of the size and type of piping and fittings specified for the project.
2. Inspection and testing shall be performed by the Manufacturer's quality control personnel in conformance with all applicable standards. Testing may be witnessed by City, Design Professional or approved independent testing laboratory. The Contractor shall provide certified test reports indicating that materials conform to these specifications.

1.07 PRODUCT DELIVERY, STORAGE AND HANDLING

A. Inspect all materials delivered to the site for damage. Damaged pipe shall be replaced at no additional cost to the City.

B. Store materials (piping, jointing materials, rubber gaskets, etc…) with the minimum amount of handling possible. Store materials on site in enclosures or under protective coverings out of direct sunlight. Do not store materials directly on the ground.

C. Keep the interior of pipes and fittings free of dirt and debris.

D. Handle pipe, fittings and other accessories in such manner as to ensure delivery to the trench in a sound, undamaged condition. Hand carry, use slings or other approved devices designed to protect the pipe (do not drag pipe) when moving the materials.

PART 2 - PRODUCTS

2.01 REQUIREMENTS

1. Furnish pipe materials, joint types, sizes and strength classes as indicated and specified by the contract documents. The pipe shall be made of PVC plastic having a cell classification of 12454 or 12364 as defined in ASTM D1784.
2. Higher strengths Materials: may be furnished at the Contractor's option at no additional cost to the City.

2.02 PIPE, FITTINGS, JOINTS, COATINGS

A. Pipes and fittings eight (8) inches through fifteen (15) inches in diameter shall conform to ASTM D3034 except as otherwise specified herein.

1. The minimum pipe wall thickness shall be as shown in Table 1 unless a thicker wall is noted in the contract documents.
2. Color for pipe and fittings shall be green.
3. Furnish maximum pipe length normally produced by the manufacturer. Fittings, closures and specials shall be as specified in the contract documents.
4. All pipe shall have an integral bell and spigot joint.

5. Joints shall conform to ASTM D3212. Joints shall be push-on type only with the bell-end grooved to receive a gasket.

Table 1. Minimum Pipe Wall Thickness for Pipes 8 inches through 15 inches in Diameter

Depth of Pipe Cover (feet)	Pipe SDR
Less than or equal to 15 feet	26
15 to 30 feet	21
Greater than 30 feet	PVC pipe is not allowed

6. PVC pipe shall contain the markings required by ASTM D3034.
7. The spigot end of the pipe shall be marked with a reference line to facilitate assembly and installation inspection.
8. Elastomeric seals (gaskets) shall conform to ASTM F477. Natural rubber gaskets shall not be used.
9. Fittings (tee or wye connections) suitable for four (4) inch and six (6) inch sanitary service lines shall be bell-end with a minimum wall thickness conforming to SDR 26 unless a thicker wall is noted in the contract documents.
10. A special design is required for sanitary service connections 8 inches and larger. Special designs shall conform to the contract documents.
11. Saddle connections are not be allowed for sanitary sewer service lines.

B. Pipes and fittings eighteen (18) inches through (60) inches in diameter shall conform to ASTM F679 except as otherwise specified in the contract documents.
1. Furnish maximum pipe length normally produced by the manufacturer. Fittings, closures and specials shall be as specified in the contract documents.
2. Pipe shall have an integral bell and spigot joint to form a water tight seal.
3. Pipe shall have a minimum wall thickness conforming to ASTM F679 (PS115) unless a thicker wall is noted in the contract documents.
4. Joints shall conform to ASTM D3212. Joints shall be push-on type only with the bell-end grooved to receive a gasket.
5. Elastomeric seals (gaskets) shall conform to ASTM F477. Natural rubber gaskets shall not be used.
6. The minimum wall thickness of the fittings shall be the same as the minimum wall thickness of the equivalent size of the pipe for the project, specified in ASTM F679 or as otherwise specified in the contract documents, whichever is greater.
7. The minimum pipe stiffness shall be as specified in ASTM F679 (PS115) when tested at 5% deflection in accordance with Test method D2412.

PART 3 - EXECUTION

3.01 HANDLING

A. Pipe and accessories shall be handled in a manner that will ensure their finished installation keeps the materials in a sound, undamaged condition. Equipment, tools and methods used in loading, unloading, hauling and laying the pipe and fittings shall be such that the material is not damaged.

B. Pipe shall be handled in such a manner that no weight, including the weight of the pipe itself, will bear on or be supported by the spigot end or bell end at any time. Pipe and fittings which have been damaged to any degree will not be accepted and shall be removed from the project site.

3.02 TRENCHING AND BACKFILL.

A. Trenching, backfill, compaction and other efforts related to earthwork shall conform to Section 02250 – Trenching, Pipe Embedment and Backfill.

3.03 PIPE INSTALLATION

A. Install pipe and fittings in accordance with the requirements of ASTM D2321 for laying and joining pipe and fittings.

B. Inspect each pipe and fitting before and after installation; replace those found damaged or defective and remove from the trench and site.

C. Provide proper equipment and tools for lowering sections of pipe into the trench.

D. Lay pipe with the bell ends in the upgrade direction (bells ahead). Adjust spigots in the bells to give a uniform space all around. Blocking or wedging between bells and spigots is not allowed. Replace the pipe or fitting with one of the proper dimensions to allow uniform space for the proper installation of the joint.

E. At the end of each work day, temporarily seal the open ends of the pipe with a manufacturer's watertight plug or cap.

F. Provide batter boards not more than 25 feet apart in trenches for checking and ensuring that pipe invert elevations are as indicated in the contract documents. A laser beam may be used in lieu of batter boards for the same purpose.

G. Pipe shall be protected from lateral displacement by means of granular bedding material as provided in Section 02250 – Trenching, Pipe Embedment and Backfill.

H. Under no circumstances shall pipe be laid in water and no pipe shall be laid in unsuitable weather conditions or unsuitable trench conditions.

I. When the pipe is jointed in the trench, the main shall form a true and smooth line. Pipe shall not be trimmed except for closures. Pipe not providing a good fit shall be removed and replaced.

3.04 ALIGNMENT AND GRADE

A. All pipe shall be laid straight and true between changes in alignment and at a uniform grade between the changes in grade.

B. All lines shall be laid so that each section between manholes will fully lamp.

C. Pipe shall be aligned and constructed to the line and grade as shown on the Drawings.

3.05 JOINTING

A. All instructions and recommendations of the pipe manufacturer, relative to gasket installation and other jointing operations, shall be observed and followed by the Contractor. All joint surfaces shall be heavily lubricated with a vegetable soap solution immediately before the joint is completed.

3.06 CUTTING PIPE

A. Cutting of the pipe shall be done in a neat manner without damage to the pipe.
B. All cutting of pipe shall be done with a mechanical pipe cutter of an approved type by the manufacturer; except in locations where the use of mechanical cutters would be impracticable. Existing pipe may be cut with diamond point chisels, saws or other tools which will cut the pipe without damaging the pipe by impact or shock.
C. Pipe cuts shall be smooth, straight and at right angles to the pipe axis.

3.07 CLEANING

A. The interior of all pipe shall be cleaned of all foreign matter before being installed and shall be kept clean until the work has been accepted. All lumps, blisters and excess coating shall be removed from the exterior surface of the spigot and the interior surface of the bell. Such surfaces shall be brushed, wiped clean, dry and free from dirt, oil and grease before placing the spigot in the bell. All joint contact surfaces shall be kept clean until the jointing is complete.
B. Every precaution shall be taken to prevent foreign material from entering the pipe while it is being installed. No debris, tools, clothing or other materials shall be placed or left in the pipe.
C. Whenever pipe laying is stopped at the end of the work day, the open end(s) of the line shall be sealed with a watertight plug or cap. Whenever a tie-in to the existing collection system is being made, plugs shall be installed to prevent groundwater and debris from entering the collection system and removed just prior to installing the closure.

3.08 FIELD QUALITY CONTROL

A. All pipelines shall be tested in accordance with Section 02702 - Sewer Pipe and Manhole Testing.

END OF SECTION

SECTION 02630 – STORMWATER PIPE AND STRUCTURES

PART 1 - GENERAL

1.01 SUMMARY

A. This section covers all labor, work, materials and equipment required for the installation of stormwater pipe, structures and all associated appurtenances.

1.02 SPECIFICATION MODIFICATIONS

A. It is understood that throughout this section these Specifications may be modified by appropriate items in section 01015 – Specific Project Requirements or as otherwise indicated on the Contract Drawings.

1.03 RELATED SECTIONS

A. 01000 – General Project Requirements.
B. 01015 – Specific Project Requirements.
C. 01016 – Water Mains Near Sewers.
D. 01300 – Submittals.
E. 01320 – Construction Progress Documentation.
F. 02200 – Earthwork.
G. 02250 – Trenching, Pipe Embedment and Backfill.
H. 02575 – Surface Restoration.
I. 02605 – Drainage Structures.
J. 02624 – PVC Gravity Sewer Pipe.
K. 02686 – Cleaning and Assessment of Gravity Lines.
L. 02702 – Testing Requirements for Sanitary Sewer: Mains and Manholes

1.04 CODES AND STANDARDS

A. The publications listed below form a part of this specification to the extent referenced. The publications are referred to within the text by the basic designation only.
B. American Association of State Highway and Transportation Officials (AASHTO) standards as cited or referenced herein.
C. American Society for Testing and Materials (ASTM):

ASTM C76-19a	Standard Specification for Reinforced Concrete Culvert, Storm Drain, and Sewer Pipe
ASTM F3219	Standard Specification for 6 to 30 in. Polypropylene (PP) Corrugated Single Wall Pipe and Double Wall Pipe
ASTM F2764	Standard Specification for 6 to 60 in. Polypropylene (PP) Corrugated Double and Triple Wall Pipe and Fittings for Non-Pressure Sanitary Sewer Applications
ASTM D2412-21	Standard Test Method for Determination of External Loading Characteristics of Plastic Pipe by Parallel-Plate Loading
ASTM D3212-20	Standard Specification for Joints for Drain and Sewer Plastic Pipes Using Flexible Elastomeric Seals
ASTM F477-14	Standard Specification of Elastomeric Seals (Gaskets) for Joining Plastic Pipe
ASTM F2306	Standard Specification for 12 to 60 in. Annular Corrugated Profile-Wall Polyethene (PE) Pipe and Fittings for Gravity-Flow Storm Sewer and Subsurface Drainage Applications

ASTM D3350-14	Standard Specification for Polyethylene Plastics Pipe and Fittings Materials
ASTM D3034-16	Standard Specification for Type PSM Polyvinyl Chloride (PVC) Sewer Pipe and Fittings
ASTM F679-16	Standard Specification for Polyvinyl Chloride (PVC) Large-Diameter Plastic Gravity Sewer Pipe and Fittings.

1.05 INFORMATION PROVIDED BY THE CITY

A. As provided in the Contract Documents.

1.06 SUBMITTALS

A. Submit in accordance with Section 01300 – Submittals.
B. Submittals include, but not limited to, the following:
   1. Pipe Certifications.
   2. Joint Sealant and/or Gaskets.
   3. Product Data.

1.07 QUALITY ASSURANCE

A. The Contractor is responsible for the quality assurance and quality control of the Work.
B. Manufacturer:
   1. Shall be experienced in the design, manufacture and commercial supplying of the specified material for a minimum period of five (5) years.
   2. Shall be experienced in the design, manufacture, and commercial supplying of the specified size of pipe for a minimum period of three (3) years.
   3. Inspection and Testing shall be performed by the Manufacturer's quality control personnel in conformance with applicable standards. Testing may be witnessed by City, Design Professional, or approved independent testing laboratory. The Contractor shall provide certified test reports indicating that materials conform to all standards and specifications.
   4. Shall certify to the above minimum experience requirements.

1.08 PRODUCT DELIVERY, STORAGE AND HANDLING

A. Pipe, fittings, and accessories shall be handled in accordance with the pipe manufacturer's recommendations.
B. Equipment, tools, and methods used in handling and installing pipe and fittings shall not damage the pipe and fittings.
C. Pipe shall not be stored uncovered in direct sunlight.
D. Pipe materials delivered or stored on site shall be free of all damage, chips, cracks, gouges or ultraviolet (UV) degradation. Damaged materials shall be removed from the site and replaced at no additional cost to the City.
E. See also Section 01000 – General Project Requirements.

PART 2 - PRODUCTS

2.01 GENERAL

A. All materials and construction shall be in compliance with KCMO Water's Standard Specifications and Manufacturer's recommendations.
B. Reinforced Concrete Pipe: All reinforced concrete pipe (RCP) as called out on the Contract Drawings, shall be of standard manufacture in accordance with the applicable sections of the Standard Specifications. Pipe materials shall meet or exceed ASTM C76, Class II, III, IV, or

V (per the design), wall B, Reinforced Concrete Pipe (RCP). Reinforced concrete storm sewer pipe shall use synthetic rubber "O-ring" gasketed joints where specified on the plans.

C. Polyvinyl Chloride Pipe: All Polyvinyl Chloride (PVC) pipe for storm sewer pipe shall be a minimum of SDR 21 and comply with Section 02624 with the exception of the color requirement.

D. Dual Wall and Triple Wall Polypropylene Storm Sewer Pipe: Dual wall pipe and fittings 12 inch through 24 inch diameter shall conform to ASTM F3219 and triple wall pipe 30 inch through 60 inch shall conform to ASTM F2764, except as otherwise specified herein. Dual wall polypropylene pipe shall have a smooth interior and annular exterior corrugation. Triple wall polypropylene pipe shall have a smooth interior and exterior with annular inner corrugations. Pipe shall have a minimum pipe stiffness of 46 psi when tested in accordance with ASTM D2412. Pipe shall be joined with an integral bell and spigot joint on all sizes. The joints shall be watertight in accordance with ASTM D3212. The spigot shall have two gaskets meeting the requirements of ASTM F477. The gaskets shall be installed by the pipe manufacturer and shall be covered with a removable, protective wrap to ensure the gaskets are free from debris. A joint lubricant shall be used on the gasket and pipe bell during assembly. Pipe shall have a reinforced bell with a polymer composite band installed by the manufacturer.

E. High Density Polyethylene Pipe (For use outside of roadways): High density polyethylene (HDPE) pipe and fittings shall conform to ASTM F2306 with annular corrugations and an integral bell and spigot. The manufacturer of the pipe must participate in the AASHTO/National Transportation Product Evaluation Program (NTPEP). The maximum cover depth shall be 30 feet.
Material for pipe and fitting production shall be HDPE conforming with the minimum requirements of cell classification 435400C for 12" to 60" diameters as defined in ASTM D3350, except carbon black content shall not exceed 4%. Joint tightness shall conform to ASTM D3212. Elastomeric seal (gasket) shall have a basic polymer of synthetic rubber conforming to ASTM F477. Natural rubber gaskets will not be used. Bells shall span over three corrugations.

PART 3 - EXECUTION

3.01 INSTALLATION

A. Storm sewer pipe structures and appurtenances shall be provided, installed and constructed at the locations shown on the Drawings. Materials and construction shall be in compliance with this Section, Related Sections listed in paragraph 1.03 and Section 2600 of the "KCMO Standard Construction Specifications and KCMO Standard Drawings", except as amended herein.

B. Prior to constructing new sewers, the Contractor shall physically locate all utilities within ten (10) feet of the proposed sewers. If there is a utility conflict with the proposed sewers, the Contractor shall notify the City/Design Professional and survey the existing service top elevation and horizontal coordinates. Certified as-built redlines and the utility investigation surveying are the sole responsibility of the Contractor.

C. The Contractor is responsible for determining all conflicted crossings for the proposed storm sewer and submit their service-relocation shop drawings and/or certified sketches for the City/Design Professional's review and approval. (Contractor is also responsible for providing field electronic data such as the location coordinates and spot elevations for the City/Design Professional's use.) It shall be the responsibility of the Contractor to obtain necessary field information for aiding in determining the required minimum length of the existing sanitary or

any other services necessary to clear for the construction of proposed sewers. See also Section 01016 – Water Mains Near Sewers for additional requirements.

D. Existing sewer mains, sanitary sewer service laterals and water service lines that require relocation or adjustment, in the vertical or horizontal alignments shall be performed by the Contractor. Repairs to the damages caused by the Contractor are the sole responsibility of the Contractor.

E. Connection(s) to an Existing System pipe and structures shall be installed per manufacturer's guidelines and recommendations. Where a storm sewer pipe is being connected to an existing drainage structure, the work shall be constructed by sawing and chipping a hole through its sidewall to allow a minimum of three-inches of new concrete around the pipe. The invert shall be chipped away and replaced to shape a new doghouse collar and invert. The interior concrete surfaces shall be grouted smooth with non-shrink grout. Depending on the method and extent of the sidewall demolition, reinforcing bars may need to be doweled into the existing structure at the direction of the City/Design Professional.

F. Pipe Trimming: Pipes connecting to structures shall be cut parallel with the inside face of structures with plane walls. Pipes connecting to other pipes shall be cut parallel with the spring line of the pipe. Projection of the pipe beyond the inside face shall not exceed one inch. Voids shall be grouted with non-shrink grout.

G. Connection of Existing Pipes to New Pipes: Connection to and/or extension of an existing pipe shall be accomplished by using a fabricated non-shear coupling. The connection shall be properly supported to prevent settlement. All work shall be performed to the satisfaction of the City/Design Professional.

H. Pipe Abandonment: Any abandoned pipes left in place shall be filled with Fly Ash Slurry and both ends plugged with concrete or as otherwise specified in the Contract Drawings.

I. Tunneling under or near a tree: Storm sewer pipes within the drip line of a tree marked "Save" shall be installed by tunneling under the roots. Drip line is defined as the diameter of the tree in inches x 10 = drip line diameter in feet. One joint of RCP may be pushed with the excavator bucket. Boring and jacking shall be accomplished in accordance with KCMO 2600; steel casing may not be required for RCP, per the design. There will be no separate payment for tunneling operations of 30' or less.

3.02 ACCEPTANCE TESTING

The Contractor shall perform acceptance testing for all manholes, structures, pipe and all appurtenances in accordance with Section 02702 – Testing Requirements for Sanitary Sewer: Mains and Manholes. The Contractor shall furnish all labor, equipment, materials and provide the testing reports for the required acceptance tests. Pipelines that do not conform to the requirements shall be repaired and/or replaced and shall be retested until the pipeline meets the project requirements. Testing shall be performed in the presence of the City/Design Professional. Testing shall be recorded by the Contractor and a copy shall be submitted to the City/Design Professional. The mandrel or laser profiling testing shall be performed after backfill and compaction operations have been completed and in accordance with Section 02702.

3.03 POST CONSTRUCTION CCTV

A. Contractor shall provide post-construction CCTV video footage for all completed pipe, in accordance with Section 02686 – Cleaning and Assessment of Gravity Lines.

END OF SECTION

SECTION 02631 – POLYVINYL CHLORIDE (PVC) PRESSURE PIPE FOR STORMWATER AND WASTEWATER

PART 1 - GENERAL

1.1 SUMMARY

A. This section covers the furnishing and installation of buried polyvinyl chloride (PVC) pressure pipe for stormwater, domestic, municipal and industrial sewage. PVC pressure pipe shall be furnished complete with all jointing materials and all other necessary appurtenances. PVC is an alternative piping material for all sewer piping shown on the drawings. See also Section 01016 – Water Mains Near Sewers for installation requirements when constructing sewers near potable water lines. All pipeline materials shall be furnished by the Contractor. All material shall be new and shall comply with the specifications described herein.

1.2 SPECIFICATION MODIFICATIONS

A. It is understood that throughout this section these Specifications may be modified by appropriate items in Section 01015 – Specific Project Requirements, or as otherwise indicated on the Contract Drawings.

1.3 RELATED SECTIONS

A. Section 01000 – General Project Requirements.
B. Section 01015 – Specific Project Requirements.
C. Section 01016 – Water Mains Near Sewers.
D. Section 01300 – Submittals.
E. Section 01320 – Construction Progress Documentation.
F. Section 02200 – Earthwork.
G. Section 02250 – Trenching, Pipe Embedment and Backfill.
H. Section 02575 – Surface Restoration.
I. Section 02702 – Testing Requirements for Sanitary Sewer: Mains and Manholes.

1.4 CODES AND STANDARDS

A. The publications listed below form a part of this specification to the extent referenced. The publications are referred to within the text by the basic designation only.

B. American Society for Testing and Materials (ASTM):

ASTM F477	Standard Specification for Elastomeric Seals (Gaskets) for Joining Plastic Pipe.
ASTM D2241	Standard Specification for Polyvinyl Chloride (PVC) Pressure- Rated Pipe (SDR Series).
ASTM D3139	Standard Specification for Joints for Plastic Pressure Pipes Using Flexible Elastomeric Seals.

C. American Water Works Association (AWWA):

AWWA C110	Ductile-Iron and Gray-Iron Fittings, 3 Inches Through 48 Inches (75 mm through 1,200 mm) for Water and Other Liquids.
AWWA C153	Ductile-Iron Compact Fittings, 3 In. Through 24 in. (76 mm through 610 mm) and 54 In. Through 64 In. (1,400 mm through 1,600 mm), for Water Service.

AWWA C900	Polyvinyl Chloride (PVC) Pressure Pipe and Fabricated Fittings, 4 In. Through 60 In. (100 mm Through 1500 mm).
AWWA Manual M23	PVC Pipe - Design and Installation.

1.5 QUALITY ASSURANCE

A. The Contractor is responsible for the quality assurance and quality control of the Work.

B. Work shall be performed by a Contractor, with a proven record of performance for similar installations.

C. Manufacturer:

1. Shall be experienced in the design, manufacture and commercial supplying of the specified material for a minimum period of five (5) years.
2. Shall be experienced in the design, manufacture, and commercial supplying of the specified size of pipe for a minimum period of three (3) years.
3. Inspection and Testing shall be performed by the Manufacturer's quality control personnel in conformance with applicable standards. Testing may be witnessed by City, Design Professional, or approved independent testing laboratory. The Contractor shall provide certified test reports indicating that materials conform to all standards and specifications.
4. Shall certify to the above minimum experience requirements.

1.6 CONTRACTOR SUBMITTALS

A. Shop Drawings:

1. Pipe and joint details, including pipe sample piece.
2. Special, fitting, and coupling details.
3. Gasket material details.

B. Product Data:

1. Laying and installation schedule complete with an explanation of all abbreviations used in the schedule.

C. Certificates:

1. Affidavit of compliance with applicable standards.
2. Test certificates.

1.7 PRODUCT DELIVERY, STORAGE AND HANDLING

A. Pipe, fittings, and accessories shall be handled in accordance with the pipe manufacturer's recommendations.

B. Equipment, tools, and methods used in handling and installing pipe and fittings shall not damage the pipe and fittings.

C. Pipe shall not be stored uncovered in direct sunlight.

D. Pipe materials delivered or stored on site shall be free of all damage, chips, cracks, gouges or ultraviolet (UV) degradation. Damaged materials shall be removed from the site and replaced at no additional cost to the City.

E. See also Section 01000 – General Project Requirements.

PART 2 - PRODUCTS

2.1 MATERIALS

A. Pipe:

1. Pipe shall conform to ANSI/AWWA C900, as applicable.

2. At a minimum, the dimension ratio of all pipe sizes shall be DR 21 in accordance with ANSI/AWWA C900.
3. The pipe minimum inside diameter and location shall be as indicated on the drawings.
4. Gaskets shall conform to ASTM F477 and be synthetic rubber. Natural rubber gaskets are not acceptable.
5. Pipe Color:
   i. Pipe interior and exterior shall be **GREEN** or **WHITE**. Blue pipe is not acceptable.
   ii. Color Code and sample piece shall be supplied with shop drawings prior to pipe approval.
6. Each pipe and fitting shall have the following information plainly and permanently marked with waterproof paint thereon:
   i. Date of manufacture code.
   ii. Manufacturer's name or trademark.
7. Control tests:
   i. Quality control tests shall be performed during the manufacture of the pipe as required in AWWA C900.

B. Fittings:
1. Fittings shall conform to AWWA C110 or AWWA C153 and shall be ductile iron. Fittings shall be mechanical joint or push-on-type joint.
2. Fittings shall have pressure rating of not less than that specified for the pipe.
3. All fittings shall have pressure rating and letters "DI" or "DUCTILE" cast on the fitting.

C. Joints:
1. Joints shall be push-on type and meet the requirements of ASTM D3139. Gaskets shall meet the requirements of ASTM F477. Gaskets of natural rubber are not acceptable.
2. Joint lubricant shall be a vegetable based lubricant. Petroleum or animal based lubricants are not acceptable.
3. Restrained Joint PVC 4" -24" shall be C900, Eagle Loc, Diamond Lok, Certainteed Certa-lok or Fusible C900.

PART 3 - EXECUTION

3.1 INSPECTION

A. Pipe shall be carefully examined for cracks and other defects immediately before installation; spigot ends and bells shall be examined with particular care.
B. All defective pipe and fittings shall be marked as such removed from the site of the work.

3.1 CUTTING PIPE

A. Cutting shall comply with the pipe manufacturer's recommendations and with Chapter 7 of AWWA Manual M23.
B. Cuts shall be smooth, straight, and at right angles to the pipe axis.
C. After cutting, the end of the pipe shall be dressed to remove all roughness and sharp edges and shall be beveled in accordance with the manufacturer's instructions.

3.3 JOINTING

A. Jointing shall conform to the pipe manufacturer's instructions and recommendations.

B. All surfaces for gasketed joints shall be lubricated immediately before the joint is complete.

C. Gaskets and lubricants shall be supplied by the pipe manufacturer, shall be suitable for use in potable water, shall be compatible with the pipe materials, shall be stored in closed containers, and shall be kept clean.

D. Each spigot shall be suitably beveled to facilitate assembly.

3.4 CLOSURE PIECES

A. A shop fabricated closure piece is required at the connections to existing pipe.

End of Section

SECTION 02686 – CLEANING AND ASSESSMENT OF GRAVITY LINES

PART 1 - GENERAL

1.01 SUMMARY

A. The work covered by this section consists of furnishing all materials, labor, equipment and supplies required to perform cleaning and inspection of gravity lines and associated structures. All pipe and structures indicated on the drawings shall be cleaned as described herein. The cleaning shall remove all accumulated grease, sand, grit, solids, roots and debris from the pipe in accordance with the specifications and to the complete satisfaction of the City/Design Professional. The inspection/assessment may include one or more of the following technologies: acoustic inspection, closed-circuit television (CCTV), laser profiling, sonar technology, focused electrode leak location (FELL) technology, light detection and ranging (LIDAR) or multi-sensor inspection. The work shall also include all data storage, data transmission, data analysis and the full reporting of the results.

B. Inspection is used to determine the physical condition of a gravity system by viewing and evaluating the inside of the piping. Condition assessments may be used for one or more of the following purposes:
   1. Verify cleaning operations.
   2. Identify defects that may result in eventual pipe failure or allowing infiltration to enter the pipe.
   3. Identify current failures of the pipe.
   4. Identify obstructions.
   5. Locate and classify connections to the pipe including sources of inflow.
   6. Percent ovality of the pipe.
   7. Corrosion and wall loss analysis.
   8. Pre-rehabilitation verification for alignment, bend analysis, and mandrel testing.
   9. Acceptance inspection.

1.02 SPECIFICATION MODIFICATIONS

A. It is understood that throughout this section, these Specifications may be modified by appropriate items in Section 01015 – Specific Project Requirements, or as otherwise indicated on the Contract Drawings. The technologies to be used for the project shall be as listed in Section 01015. If a technology is not specified in Section 01015, then by default, CCTV shall be used for the project.

1.03 RELATED SECTIONS

A. Section 00700 – General Conditions.
B. Section 01015 – Specific Project Requirements.
C. Section 01020 – Record Documents.
D. Section 01300 – Submittals.
E. Section 01566 – Cleanup Operations.
F. Section 01700 – Traffic Control.
G. Section 02580 – Pipe Bursting for Gravity Sewers.
H. Section 03362 – Sanitary Sewer Manhole Rehabilitation.
I. Section 06010 – Cured-in-Place Pipe (CIPP), CIPP Point Repairs and End Seals.

1.04 CODES AND STANDARDS

A. The publications listed form a part of this specification to the extent referenced. The publications are referred to within the text by the basic designation only.

B. National Association of Sewer Service Companies (NASSCO):

1. CCTV inspection, coding, and grading procedures shall be based upon the latest version of NASSCO Pipeline Assessment and Certification Program (PACP) observation classifications.
2. Manhole inspection, coding, and grading procedures shall be based upon the latest version of NASSCO Manhole Assessment and Certification Program (MACP) observation classifications.
3. If lateral launches are specified in Section 01015, lateral inspection, coding and grading procedures shall be based upon the latest version of NASSCO Lateral Assessment and Certification Program (LACP) observation classifications.

1.05 DEFINITIONS

A. Safety Representative: as defined by Section 00700 – General Conditions, Article 6 – Contractor's Responsibilities.

B. Cleaning is defined as the removal of all materials and debris from the gravity line, manholes and all other structures along the gravity line. The cleaning shall restore the gravity line to a minimum of 95 percent of the original carrying capacity. This does not include the removal of hard deposits such as minerals or iron scale.

C. Preconstruction Television Inspection: the requirements for Preconstruction Television Inspections are defined in other Sections of the Contract Documents. Sections that include specific requirements include, but are not limited to, the following:

1. Section 02580 – Pipe Bursting.
2. Section 06010 – Cured-in-Place Pipe (CIPP), CIPP Point Repairs and End Seals.

D. Post-Construction Television Inspection: All post construction CCTV inspection and/or post installation CIPP inspections will follow all requirements listed in this section, in addition to any other requirements listed in the Contract Documents. Sections that include specific requirements include, but are not limited to, the following:

1. Section 02580 – Pipe Bursting.
2. Section 06010 – Cured-in-Place Pipe (CIPP), CIPP Point Repairs and End Seals.

1.06 INFORMATION PROVIDED BY THE CITY

A. As provided in the Contract Documents.

B. Work order numbers, if assigned by the City.

C. "Comp Key" numbers, if assigned by the City.

D. Manhole numbers to be used when unrecorded or unnamed manholes are encountered.

E. GIS shape file or geodatabase of the project area.

F. As-built drawings as needed to complete the scope of work.

1.07 SUBMITTALS

A. Submit as specified in Section 01300 – Submittals.

B. Complete details and specifications covering cleaning procedures, modifications, and equipment to be used.

C. Shop Drawings:

1. Not applicable.

D. Product Data:
   1. Complete details and specifications covering all television inspection equipment. Information shall include, but is not limited to, that required to verify conformance with the following:
      (a) Part 2.03 TELEVISION INSPECTION EQUIPMENT FOR MAINLINE SEWERS.
      (b) Part 2.04 TELEVISION INSPECTION EQUIPMENT FOR CONNECTIONS/LATERALS.
      (c) That the equipment is suitable and can provide video recordings in the resolution and format specified in Part 2.05 VIDEO RECORDINGS.
      (d) That the equipment is suitable and can provide still photographs in the resolution and format specified in Part 2.06 PHOTOGRAPHS.
   2. Inspection procedures:
      (a) Provide example NASSCO PACP Header Form to be used.
      (b) Provide example NASSCO PACP Inspection Form to be used.
      (c) Provide example NASSCO MACP Header Form to be used.
      (d) Provide example NASSCO MACP Inspection Form to be used.
      (e) Provide example NASSCO LACP Header Form to be used (if lateral launches are specified in Section 01015).
      (f) Provide example NASSCO LACP Inspection Form to be used (if lateral launches are specified in Section 01015).
E. Samples:
   1. Not applicable.
F. Other Submittals:
   1. CCTV Operators NASSCO-PACP/MACP/LACP certifications and when utilized, the artificial intelligence software used to identify and assess defects.
   2. Requests for Working Hours Adjustment (as required).
   3. Preconstruction and Post-construction CCTV inspection videos and cable footage meter calibration reports shall be submitted weekly.
   4. Preconstruction and Post-construction inspections shall be submitted monthly, as a condition to payment, and include at a minimum the following:
      (a) Could Not Access (CNA) List: Submit a list of manholes that could not be accessed and why they couldn't be accessed.
      (b) Clearing Request Map: Submit with the CNA List a map showing the requested areas for clearing (as applicable).
      (c) Could Not Locate (CNL) List: Submit a list of manholes that could not be located.
      (d) Could Not Open (CNO) List: Submit a list of manholes that could not be opened.
      (e) Map Change Forms.
      (f) Videos.
      (g) PACP Pipe Run Reports: Reports shall be submitted as individual PDF files for each pipe segment.
      (h) MACP Manhole Reports: Reports shall be submitted as individual PDF files for each manhole (if manhole inspections are specified in Section 01015).
      (i) LACP Lateral Reports: Reports shall be submitted as individual PDF files for each lateral (if lateral launches are specified in Section 01015).
      (j) NASSCO PACP Microsoft Access Database.
      (k) NASSCO MACP Microsoft Access Database.

(l) NASSCO LACP Microsoft Access Database (if lateral launches are specified in Section 01015).

5. Post-construction inspection and documentation shall be submitted as one final consolidated package at the end of the project, as a condition to final completion, and include at a minimum the following:
   (a) Videos.
   (b) Photographs.
   (c) PACP Microsoft Access Database.
   (d) MACP Microsoft Access Database (if manhole inspections are specified in Section 01015).
   (e) LACP Microsoft Access Database (if lateral launches are specified in Section 01015).
   (f) PACP Pipe Run Reports: Reports shall be submitted as individual PDF files for each pipe segment.
   (g) MACP Manhole Reports: Reports shall be submitted as individual PDF files for each manhole (if manhole inspections are specified in Section 01015).
   (h) LACP Lateral Reports: Reports shall be submitted as individual PDF files for each lateral (if lateral launches are specified in Section 01015).
   (i) A log of all manholes located in the field but not included on City maps.
   (j) A log of all manholes included on City maps but not located in the field.
   (h) A log of pipes, manholes and laterals that were inspected before cleaning.

1.08 ACOUSTICAL INSPECTION

A. When specified in Section 01015, an acoustical inspection shall be done as an initial assessment tool to identify blockages in gravity pipes. The acoustical inspection shall be performed in accordance with the Acoustical Systems manufacturer's recommendations in order to establish ratings of 0-10 for obstructions in the pipeline segments being assessed.

B. If acoustical inspection is specified for the project, it shall only be used on sewers 6-inches through 12-inches in diameter.

1.09 2D LIDAR/LASER PROFILING INSPECTION

A. When specified in Section 01015, the CCTV inspection system with laser ring projection or 2D LIDAR head shall be used for inspection/assessment of the gravity line. The color inspection video, from the camera, shall be recorded in mp4 format. 2D Laser/LIDAR shall be used for measuring internal diameters to determine corrosion, wall loss, and/or ovality.

B. Each Inspection shall contain CCTV Pre-Inspection (including header), Profiler Inspection (including header), calibration (horizontal and vertical) and lens distortion validation.

1.10 SONAR INSPECTION

A. When specified in Section 01015, sonar inspection shall be performed according to the Sonar System manufacturer's recommendation as it pertains to survey rate in inches per second to collect data below the flowline. The Sonar Inspection System shall operate in real time mode with continuous interior scanning over full 360 degrees. Digital data shall be recorded at full resolution.

1.11 3D LIDAR INSPECTION

A. When specified in Section 01015, 3D LIDAR inspection shall be performed according to the LIDAR manufacturer's specifications for assessment of the gravity line. LIDAR scans shall be used to measure internal diameters to determine corrosion, wall loss, and/or ovality.

B. When specified for pre-rehabilitation, only 3D LIDAR can be used for determining alignment, bend analysis, and virtual mandrel testing for construction purposes.

1.12 MULTI-SENSOR INSPECTION

A. When specified in Section 01015, multiple inspection technologies/sensors shall be used in synchronization to assess the interior of the pipe. This can include, but is not limited to, CCTV, Sonar, 2D Laser or 3D LIDAR, hydrogen sulfide gas sensor and/or temperature sensor. Where applicable, the analysis of data from each technology will be used to verify one another, providing a visual representation of the internal pipe with laser-LIDAR above the flow line and sonar measurement below the flow line. In all scenarios, high-definition CCTV must be used. After processing, all data and reporting deliverables shall be delivered to the City/Design Professional.

1.13 FOCUSED ELECTRODE LEAK LOCATION (FELL) TESTING FOR POST CURED-IN-PLACE PIPE (CIPP) MAINS

A. When specified in Section 01015, acceptance testing and certification of repairs, relining, and renewal, shall be performed using Focused Electrode Leak Locating (FELL) and shall be performed by an independent third-party contractor, in accordance with the ASTM F2550, Standard Practice for Locating Leaks in Sewer Pipes By Measuring the Variation of Electric Current Flow Through the Pipe Wall and the Seventh Edition, Volume 1, MAINTENANCE AND OPERATION OF WASTEWATER COLLECTION SYSTEM manual (December 2015) ISBN 978-1-59371-066-8, where Focused Electrode Leak Locating is referred to as Electro Scanning Inspection.

B. The contractor shall furnish all necessary labor, equipment, materials, services and incidentals required to record inspection by means of Focused Electrode Leak Locating technology on City designated, rehabilitated gravity sewer line sections from manhole to manhole (or from clean out to mainline for laterals), including but not limited to, charts and graphs, and final overall report. The report shall include a graph and chart outlining the location of all defects and the magnitude of each. The report shall include an estimate of the size of the defect and the potential infiltration of each, with a total for all.

C. Post-Rehabilitation FELL Testing shall be performed on the lineal footage specified in Section 01015 of all rehabilitated mainline pipes that receive CIPP lining, selected at random by the City, paid for at the established unit prices in the Contract. The City reserves the right to perform additional post-rehabilitation FELL testing at the established unit prices in the Contract.

D. Qualifications: All FELL inspections shall be done with the use of an approved supplier of the Focused Electrode Leak Locating technology equipment that meets ASTM F2550-13, Standard Practice for Locating Leaks in Sewer Pipes by Measuring the Variation of Electric Current Flow through the Pipe Wall. Only those licensed and pre-approved by the equipment manufacturer shall be allowed to perform the Work. Submit certification of licensing and training in accordance with Section 01300 – Submittals.

1.14 AUTO DETECTION/AUTO CLASSIFICATION SOFTWARE

A. When specified in Section 01015, the contractor shall use an artificial intelligence (AI) software to analyze the CCTV inspection footage of the gravity line. The software shall automatically detect and classify every defect per established NASSCO PACP standards.

1.15 QUALITY ASSURANCE

A. The Contractor is responsible for the quality assurance and quality control of the Work. Contractor shall employ minimum quality control methods that meet or exceed those required by the latest versions of NASSCO.
B. Contractor shall employ only experienced personnel who are familiar with, and regularly engaged in, the type of work required; shall provide adequate supervision by a qualified supervisor at all times when cleaning is in progress; and shall have access to the equipment of proper size and capacity to perform the work as specified herein.
C. All inspections, post processing, and quality control shall be conducted by NASSCO certified PACP/MACP/LACP operators (Operators).
D. Contractor shall submit a copy of each Operator's NASSCO certification(s) and ID card with Name, Certification Number, and Expiration Date clearly visible. The NASSCO certification(s) shall be current upon Notice to Proceed. If the operator's certification expires during the Work, documentation of recertification shall be provided to the City prior to the expiration.
E. All videos, photographs, and audio recordings are subject to acceptance by the City. Equipment that does not produce a picture or audio quality acceptable to the City shall be replaced. For deliverables that are not accepted by the City, the inspection shall be re-conducted at no additional cost to the City.
F. The data and information provided by the Contractor shall be delivered in strict accordance with the naming conventions for assets described herein. Information included as part of the final deliverables that cannot be associated with the Comp Keys provided, or does not meet the naming conventions specified, will not be accepted.
G. Data cleanliness, handling, labeling, naming conventions, PACP coding standards, organization, and security are of the utmost importance to the City. Any CCTV videos, reports, or database not in compliance with this Section shall not be accepted.

1.16 PRODUCT DELIVERY, STORAGE AND HANDLING

A. Product Delivery for weekly deliverables shall be electronically uploaded to a City-designated site. Weekly submittals shall not represent interim acceptance by the City, with any quality control or quality assurance concerns, corrections, or required modifications, to be included in any and all final deliverables.
B. Product Delivery for final consolidated package shall be delivered on an external, portable hard drive that will become the property of the City. Each external hard drive or digital file in the data set shall be given a unique name/label. The Contractor shall include an electronic photograph index that identifies the photographs by file name located on each external hard drive or digital file folder. The hard drive shall include a README text file that includes the following information:
    1. Name of Project.
    2. City Project Number.
    3. City Contract Number.
    4. Date of Submittal.

5. Contractor Name.
6. Contractor Address.
7. Name of Contractor's Representative.
8. Phone Number of Contractor's Representative.
9. Email of Contractor's Representative.

C. Storage of all source media will be the sole responsibility of the Contractor and must be stored and properly maintained for a period of thirty-six (36) months after Contractor's Substantial Completion date, available to the City or its designated representatives within ten (10) business days of the written request.

D. All work product and deliverables shall be in digital format, or in a format requested by the City. Additionally, three paper copies of the final report shall also be provided.

1.17 SAFETY PLAN

A. The Contractor's responsibilities for safety are defined by Section 00700 – General Conditions, Article 6 – Contractor's Responsibilities.

B. Entrance into any manhole is considered a Permit Required Confined Space.

C. In addition to the safety requirements of Section 00700, the Contractor shall develop and implement a project-specific, comprehensive safety plan to address safety concerns related to the Work.

D. The Safety Plan shall be submitted to the City prior to commencement of pipeline inspections.

E. At a minimum, the safety plan shall conform to the following guidelines:
   1. The work area shall be properly barricaded to direct pedestrian and vehicular traffic away from the work site following local and state traffic control requirements and the latest edition of the Manual of Uniform Traffic Control Devices (MUTCD) and Section 01700 – Traffic Control.
   2. The plan shall describe personal protective equipment (i.e. hard hats, reflective safety vests and other required personal protective equipment) to be worn.
   3. The plan shall describe all personal protective equipment to be worn while handling hazardous material (sewage).
   4. The plan shall describe all confined space entry protocols.
   5. Work shall be scheduled to avoid rush hour traffic when possible.

F. The Safety Plan shall include the name and contact information of the Contractor's Safety Representative with a description of their job duties and level of responsibility with respect to the Work described in this section.

1.18 SCHEDULING THE WORK

A. Generally, the Work is to be conducted during times allowed by Section 00700, Article 6, Contractor's Responsibilities and Section 01000 – General Project Requirements, paragraph TEMPORARY ENVIRONMENTAL PROTECTION which establishes hours of operations.

B. See additional instruction for scheduling the Work in Section 01015 – Specific Project Conditions.

PART 2 - PRODUCTS

2.01 ACOUSTICAL INSPECTION EQUIPMENT

A. Contractor shall own, lease and/or rent one (1) set (minimum) of acoustical assessment equipment as manufactured by Infosense Incorporated (SL-Rat equipment). The set includes an acoustic transmitter and a signal receiver.

2.02 CLEANING EQUIPMENT

A. The equipment selected for cleaning shall be capable of removing all dirt, grease, rock, brick, wood, sand, mud, roots and other deleterious materials and obstructions from the gravity line. Cleaning shall be performed using hydraulically-propelled, high-velocity and/or mechanically-powered cleaning equipment and vacuum removal equipment.

1. Hydraulically powered equipment: The equipment used shall be of a movable dam type and be constructed in such a way that a portion of the dam may be collapsed at any time during the cleaning operation to protect against flooding of the sewer or bypassing to waterways. The movable dam shall be equal in diameter to the pipe being cleaned and shall provide a flexible scraper around the outer periphery to ensure removal of grease. If sewer cleaning balls or other equipment which cannot be collapsed are used, special precautions shall be taken that are acceptable to the Owner, to prevent flooding of sewers and property.
2. High velocity equipment: All high-velocity cleaning equipment shall be constructed for ease and safety of operation. The equipment shall have a minimum of 700 feet of one inch minimum diameter hose with working pressure ratings to match the rating of the water pressure. The equipment shall have a selection of two or more high-velocity nozzles. The nozzles shall be capable of producing a scouring action from 10 degrees to 45 degrees in all sizes of gravity lines included in this Contract using a minimum volume of 60 gallons of water per minute, at a minimum working pressure of 2,000 pounds per square inch. Special care shall be taken when cleaning CIPP rehabilitated pipelines by using a wide spray nozzle with a maximum spray angle of 30 degrees, a nozzle pipe centralizer and a maximum pressure of 2,000 PSI.
   (a) Equipment shall also include a high-velocity gun for washing and scouring the manholes and diversion structure walls, channels, shelves, floors, and manhole covers and frames from grade level. The gun shall be capable of producing flows from a fine spray to a solid stream. The equipment shall carry its own water tank, auxiliary engines, pumps, and hydraulically-driven hose reel. Filler piping on the tank shall have an air gap to prevent backflow and contamination of the water supply system.
3. Mechanically powered equipment: Bucket machines shall be in pairs with sufficient power to perform the work in an efficient manner. Machines shall be belt operated or have an overload device. Machines with direct drive that could cause damage to the pipe will not be allowed. A power rodding machine shall be either a sectional or continuous rod type. To ensure safe operation, the machine shall be fully enclosed and have an automatic safety clutch or relief valve.

2.03 TELEVISION INSPECTION EQUIPMENT FOR GRAVITY LINES

A. All television inspection equipment shall be specifically designed and manufactured for the inspection purposes intended under this Contract.

B. Video cameras/recorders not specifically intended for use for internal television inspection of gravity lines will not be allowed.

C. The Contractor shall conduct CCTV inspections using a self-propelled tractor unit. The tractor unit shall have the following minimum features and capabilities:

1. The camera shall be designed specifically for gravity pipe inspections and the appropriate diameter.
2. The camera shall be capable of operating in 90% humidity.
3. For 8 inch through 46 inch pipes, the camera shall have a minimum of 640 lines of resolution.
4. For 48 inch and larger pipes, the camera shall have a minimum of 1280 lines of resolution.
5. The camera shall have either automatic or remote: focus and iris control.
6. The camera shall have zoom, pan and tilt capabilities to facilitate defect viewing and evaluation. Digital zoom is acceptable when utilizing equipment with HDCCTV.
7. The unit shall be equipped with lights capable of lighting the entire periphery of the pipe. The illumination shall allow an even distribution of the light around the perimeter of the pipe without the loss of contrast or flare out of picture shadowing.
8. Cable Footage Meter:
   (a) The unit shall be equipped with a cable footage meter so that the location of defects and service laterals relative to the starting manhole location can be reported.
   (b) The cable footage meter shall be able to reach a minimum of 1,000 feet.
   (c) The cable footage meter shall be accurate to 0.5 feet per 100 feet (0.5%).
   (d) The cable footage meter shall be calibrated in accordance with paragraph CABLE FOOTAGE METER CALIBRATION.
9. Camera must have capability to position camera head in the middle of the pipe (example: camera head will be 4-inches from pipe invert in an 8-inch pipe) by adjusting elevator or by varied wheel sizes. For pipe sizes 48-inch and larger, Contractor shall submit the proposed equipment for City approval.
10. In no case shall cameras be equipped with carbide-tipped wheels that increase traction and potentially harm post-rehabilitation lining or pipe wall interiors. Any damage caused to post-rehabilitation repairs, relining, or rehabilitation will be the sole responsibility of the Contractor to correct or repair to the City's satisfaction.

2.04 TELEVISION INSPECTION EQUIPMENT FOR CONNECTIONS/LATERALS

A. If laterals or connecting pipes are to be inspected, the Contractor may use one of the following:

1. Inspections from the mainline: a self-propelled tractor unit that incorporates a lateral launch camera tool.
2. Inspections from a cleanout: a push camera system provided especially for lateral inspections.

B. The lateral equipment shall have the following minimum features and capabilities:

1. The camera shall be designed specifically for lateral pipe inspections and the appropriate diameter.
2. The camera shall be capable of operating in 100% humidity.
3. The camera shall have a minimum of 640 lines of resolution.
4. The unit shall be equipped with lights capable of lighting the entire periphery of the pipe. The illumination shall allow an even distribution of the light around the

perimeter of the pipe without the loss of contrast or flare out of picture shadowing.

C. In the event of a full-length lateral rehabilitation, from the mainline connection to the house, a full-length lateral inspection shall be conducted.

2.05 VIDEO RECORDINGS

A. Contractor shall perform sewer pipe inspections from access point to access point unless a pipe converges into another pipe alignment at a fitting; then the inspection shall be performed from access point to fitting as shown in figure 2.1.

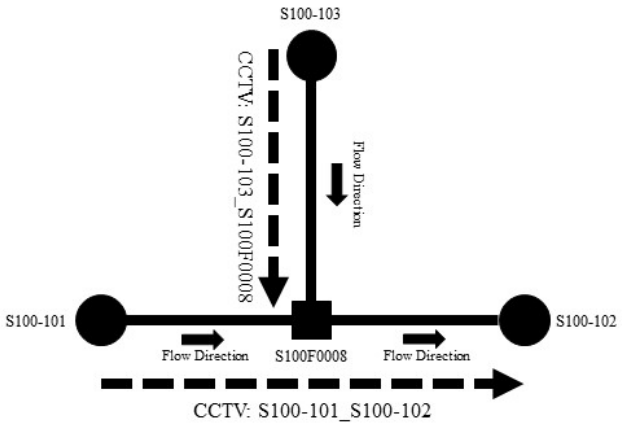

Figure 2.1: Performing Sewer Pipe Inspections

B. Each video television inspection shall be submitted in digital format with associated video, images, report, and all inspection data included in a Microsoft Access Database.

C. All video recordings shall be recorded and provided in digital MPEG-4 Part 14 (MP4) format.

D. All video recordings shall be in color.

E. File Naming Convention – Mainline Sewers:

1. Each line segment video shall be named using the upstream manhole identifier, underscore, downstream manhole identifier, underscore, date stamp, underscore and inspection direction (no exceptions). Use “U” for upstream and “D” for downstream inspection direction.
2. For example, the video for the line segment from manhole S023-314 to manhole S023-317 inspected upstream to downstream would be labeled as follows: S023-314_S023-317_YYYYMMDD_D. Any deviation from the File Naming Convention for Mainlines will not be accepted.

E. File Naming Convention – Service Laterals:

1. Each service lateral video shall be named using the upstream manhole identifier, underscore, downstream manhole identifier, underscore, date stamp, underscore, inspection direction, underscore, Tap Feature Code, underscore, and lateral location in feet from start of inspection. Use “U” for upstream and “D” for downstream inspection direction.
2. For example, the video for a rehabilitated sewer service 50 feet downstream from manhole S023-314 on line segment S023-314_S023-317 would be labeled as

follows: S023-314_S023-317_YYYYMMDD_D_TRA_50. Any deviation from the File Naming Convention for Laterals will not be accepted.

F. Videos shall not be filtered, clipped, edited, modified, enhanced, or otherwise changed, except for overlay corrections. In no event shall videos have missing frames or sections of video.

2.06 PHOTOGRAPHS

A. All photographs shall be recorded and provided in a digital format.
B. Photographs shall be provided in JPEG file format.
C. All photographs shall be in color.
D. File Naming Convention:
   1. Digital photograph files shall be named using the associated video file name, associated defect code, and linear footage (in 3-digits) assigned to the defect for each line segment survey (**no exceptions**).
   2. For example, if a picture is taken May 25, 2021, at a Hole Soil Visible defect, 75 linear feet upstream against the direction of flow (reverse set up), on a line segment located south of the Missouri River on atlas map 24 between manholes 500 (upstream manhole) and 498 (downstream manhole), then the digital photograph file name would be as follows:
      S024-500_S024-498_20210525_U_HSV_75

2.07 SOFTWARE

A. The CCTV data shall be delivered utilizing the latest version of NASSCO PACP certified software.
B. The latest version of the Data Viewer shall be provided at the start of the inspection.
C. If specified, the artificial intelligence (AI) software for detecting and classifying defects shall be:
   1. SewerAI.
   2. Molfar.AI.
   3. City approved equal.

2.08 LASER / 2D LIDAR PROFILING INSPECTION EQUIPMENT

A. All laser profile inspection equipment shall be specifically designed and manufactured for the inspection purposes intended under this Contract.
B. Laser Profilers and 2D LIDAR sensors shall be Laser Safety Class II and certified eye-safe as per US – IEC 60825-1 standard.
C. All laser/LIDAR equipment shall be calibrated regularly to ensure accuracy of +/- 5mm in pipes 20-inches or larger.
D. Contractor shall own, lease and/or rent at a minimum one (1) each of the MSI SuperMD Profiler and MSI MD Profiler as manufactured by RedZone Robotics and one (1) CUES SolidFX Profiling system for the duration of the field work associated with the Work.

2.09 SONAR INSPECTION EQUIPMENT

A. The sonar equipment must be specifically designed for use in sanitary sewer systems using high frequency sound waves to locate and map irregularities within the pipe environment creating continuous sonar images recorded in “real time” mode.
B. Sonar equipment must be capable of continuous data collection throughout each applicable pipe segment reach and contain sufficient information to produce a visual

profile, profile comparison, and dimensions data of significant debris and/or defects. This includes depth, volume and cross-sectional area along the length of pipe.

C. When specified, sonar inspections, either on their own or through multi-sensor inspection, shall be utilized prior to any cleaning in pipes 21" and greater to provide evidence that cleaning is required. Post verification inspections shall be a combination of CCTV and/or Sonar, as flow permits.

2.10 3D LIDAR INSPECTION EQUIPMENT

A. Contractor shall own, lease and/or rent at a minimum one (1) each of the MSI Responder tracked crawler as manufactured by RedZone Robotics for the duration of the field work associated with the Work.

B. 3D LIDAR inspection equipment should be capable of inspections in pipes 36 inches and larger.

C. When pre-rehabilitation inspection that requires alignment, bend analysis, or virtual mandrel testing is specified, a 3D LIDAR must be used for proper accuracy and modelling.

D. LIDAR sensor shall be Class I eye-safe as per US – IEC 60825-1 standard.

E. High-definition CCTV shall be captured when any LIDAR inspection is performed.

2.11 MULTI-SENSOR INSPECTION EQUIPMENT

A. Multi-sensor inspection equipment must be capable of synchronized sensor measurement, collected during a single deployment of the equipment. Where applicable, the analysis of data from each technology will be used to verify one another. All sensors shall be zeroed at the beginning of the pipe segments.

B. Equipment must be operated via a tracked crawler or floating platform specifically designed for inspection in gravity lines.

C. Equipment shall be capable of long-distance deployments and have tether length of 3000 linear feet, and sufficient power (battery or otherwise) to operate at those lengths. It is permissible to inspect through multiple access points, provided that sensor data is zeroed at the beginning of each new pipe segment.

D. When specified, multi-sensor inspection equipment shall be utilized prior to any cleaning in pipes 21" and greater to provide evidence that cleaning is required. Post verification inspections shall be a combination of CCTV and/or Sonar, as flow permits.

2.12 FELL INSPECTION EQUIPMENT

A. The Focused Electrode Leak Locating technology system used for the pipeline assessment shall be specifically designed and constructed for such inspection. This equipment and proposed solution shall be in full compliance with and have capabilities as outlined in ASTM F2550-13 Standard Practice for Locating Leaks in Sewer Pipes by Measuring the Variation of Electric Current Flow through the Pipe Wall.

B. Instrumentation must represent a complete and fully functioning device to scan the pipe and record all pipe defects capable of causing leaks. The proposed solution must include any recommended accessories and spare parts necessary to complete this work.

PART 3 - EXECUTION

3.01 OBSERVATION OF WORK

A. City reserves the right to be present and continuously observe the work and information being displayed at the recording site.

3.02 TRAFFIC CONTROL

A. Traffic control and signage for the inspection operation shall be the responsibility of the Contractor and shall be acceptable to the City.
B. Traffic Control shall be conducted in accordance with Section 01700 – Traffic Control.

3.03 LOCATING MANHOLES/STRUCTURES

A. For the work required by the contract documents, the Contractor shall locate, make open and accessible all existing manholes, structures and access points.
B. The Contractor will be responsible for conducting a reasonable search to locate missing manholes. The minimum effort to locate missing manholes should include:
   1. Conducting a field search.
   2. A comparison of verified field conditions against available City information.
   3. Utilization of specialty equipment such as metal detectors.
C. If after conducting a reasonable search, a manhole cannot be found in the area specified by the sewer maps, then the Contractor should seek City assistance.

3.04 UNRECORDED/UNNAMED MANHOLES

A. Manholes located in the field, which are not shown on the Drawings shall be documented for submittal.
B. If an unrecorded/unnamed manhole is encountered, television inspection may proceed, but the Contractor shall notify City and request a City assigned manhole number and comp key. Manhole numbers and Comp Keys be obtained from the City and the final deliverable data shall be modified to reflect the assigned manhole number and comp key on any segment connected to an unrecorded/unnamed manhole.
C. Contractor shall submit weekly to the City: a Map Change Form with Unrecorded/Unnamed Manholes showing the revised system connectivity, photographs of the location, and a brief description of the location of each Unrecorded/Unnamed Manhole.

3.05 ACOUSTICAL ASSESSMENT

A. Assessment shall be done one pipe segment at a time between two adjoining structures or manholes. The flow within pipeline is irrelevant to the assessment.
B. The unit set shall be calibrated daily prior to starting the assessment.
C. The following information is required by the City: manhole ID's upstream and downstream for the pipeline segment being assessed, assessment date, pipeline length, notes, etc. Prior to initiating the acoustical assessment, all information shall be entered into the unit for each segment.
D. During the assessment, the software will designate a numerical value to the quality of the sound sent and received (rating of 0-10) giving a nominal assessment of Good, Fair, Poor or Blocked.
E. Each night the data shall be transferred from the field assessment equipment to the SL-Dog software installed on a PC.

F. The assessment data shall be provided to the City/Design Professional in CSV (Excel), SHP (Arc GIS) or PDF. The data deliverables shall be solely at the discretion of City/Design Professional.
G. The City/Design Professional will be responsible for the review and analysis of the data provided.

3.06 CLEANING

A. It is the responsibility of the Contractor to properly apply for, secure and provide for all water needed to perform the cleaning work described herein.
Precautions shall be taken to protect the sanitary sewer structures from damage that may result from improper use of the cleaning equipment. Contractor is responsible for traffic control, as needed; in addition to Contractor's truck warning lights and traffic cones, as needed or required. Traffic control is subject to review and approval by the Owner. If successful cleaning cannot be performed without risk of damage to the pipe, or if the equipment fails to traverse the entire line segment, cleaning efforts shall be temporarily suspended, and the Owner shall be notified. The line segment shall then be evaluated in order to determine if the segment can be adequately cleaned. Any unusual conditions found during the cleaning operations shall be reported to the Owner as soon as possible.
B. Any modifications to manholes to facilitate cleaning shall be the Contractor's responsibility and shall be subject to approval by Owner.
Contractor shall salvage and reuse all manhole covers and rings that are removed during sewer line and manhole rehabilitation, unless otherwise directed by Engineer.
C. When pumping and bypassing is required, Contractor shall supply the pumps, piping, and other equipment necessary to divert the flow of wastewater around the sewer section being cleaned and back into the interceptor sewer. All existing wastewater flows, plus waters added to the flow due to cleaning, shall be contained within the existing sewer system. The bypass system shall have the necessary capacity to handle all the flow.
The Contractor shall be responsible for furnishing the labor and supervision necessary to set up and operate the pumping and bypass system. For pumping and bypassing operations, a plan must be submitted in accordance with the procedures set forth in the submittals section. In performing the work under this Contract, Contractor shall be thoroughly familiar with federal, state, and local statutes, ordinances, and directives with respect to excessive noise and pollution of air and water due to construction operations. If pumping and bypassing is required, engines shall be equipped in a manner to keep noise to a minimum.
D. During sewer cleaning operations, satisfactory precautions shall be taken in the use of cleaning equipment. When hydraulically propelled cleaning tools, which depend on water pressure to provide their cleaning force, or tools which retard flow in the sewer line are used, precautions shall be taken to ensure that the water pressure created does not damage or cause flooding to public or private property being served by the sewer being cleaned or does not cause bypassing of flow to nearby waterways.
The flow of wastewater in the sewers shall be utilized to provide necessary pressures of hydraulic cleaning devices whenever possible. When additional water is required from other sources to avoid delay in normal work procedures, the water shall be conserved and not used unnecessarily. No fire hydrant shall be obstructed in case of fire in the area served by the hydrant. The Contractor shall be responsible for all damage to public and private property as a result of all cleaning operations. The cost

of restoring any damaged area to conditions prior to cleaning shall be borne by the Contractor at no additional cost to the Owner.

E. All roots shall be removed. Special attention shall be given during the cleaning operation to assure complete removal of roots from the joints. Procedures may include the use of mechanical equipment such as rodding machines, bucket machines and winches using root cutters and porcupines, and equipment such as high-velocity jet cleaners. Chemical root treatment may be used at the option of the Contractor. When chemicals are used to aid in the removal of roots, the chemical shall be EPA registered and labeled for use in sewer lines and acceptable to all applicable State and City agencies. All material and mixing/application procedures for chemical root treatment shall be consistent with the latest standards, requirements, and recommendations of the manufacturer of the chemical root treatment material used.

F. All sludge, dirt, sand, grit, rocks, bricks, wood, mud, grease, roots and any other solid or semi- solid material resulting from the cleaning operation shall be removed using vacuum removal equipment or other methods to assure debris does not cause downstream obstruction. Vacuum equipment shall be suitable for removal of all debris at each manhole location for each line being cleaned. Vacuum system performance will be at least 4,000 CFM and 16” Hg vacuum pressure to ensure all debris can be efficiently removed from the sewer. A device designed to minimize debris from escaping down the sewer line, the design and use of which is subject to approval by Owner, shall be used in all sewer line cleaning operations. When hydraulic cleaning equipment is used, a suitable sand trap, weir, basket, or dam shall be constructed in the downstream manhole in such a manner that the solids will be trapped while using a rake or sewer shovel to help collect solids. Material or debris removed from the sewer shall be immediately placed in watertight containers. Containers may include valved drains to remove excess water from containers. Drainage, including rainfall, shall be contained and returned to the sewer by means acceptable to the Owner.

G. Multiple passes (one to three passes) with the water jet shall be made, as required, to flush the debris to the manhole in order to remove the debris. Sewers will be cleaned by introducing the water jet into the sewer line facing against the sewer flow and retrieving the water jet under pressure with the sewer flow. The nozzle shall not be stopped in the sewer line when under working pressure, but shall continue to move through the line at all times.

H. All debris removed from the sewer shall be legally disposed of by and at the expense of the Contractor. The disposal facility shall be a permitted landfill. The debris shall be dewatered and suitable for immediate disposal prior to weighing at the landfill. Contractor shall provide the Engineer with scale tickets to verify quantities of debris disposed of in an approved landfill. Transportation of debris or other material by the Contractor shall be done in vehicles or equipment which contain the debris or other material in such a manner to minimize objectionable odor and avoid the possibility of dripping, spilling, scattering, leaking, or blowing. Should mishaps occur for any reason, the Contractor shall be responsible for cleaning up any debris or other material to the satisfaction of the Owner or other authorities having jurisdiction. All vehicles transporting debris or other material shall not exceed the maximum allowable load limits of any road being used.

I. Contractor shall televise the sewers, in accordance with the television inspection section, upon the completion of cleaning. Acceptance of sewer line cleaning shall be based upon the review of the inspection videos by the City or Design Professional.

If cleaning inspections show the cleaning to be unsatisfactory, the Contractor shall be required to re-clean and re-inspect the sewer line, at no additional cost to the Owner, until cleaning is shown to be satisfactory.

3.07 SEWER FLOW DIVERSION AND CONTROL

A. During CCTV inspection, the pipe should be free of obstructions that impede visibility. The depth of flow at the upstream manhole of the sewer line section being inspected shall not exceed 15 percent of the pipe diameter. As necessary, Contractor shall divert flow to allow for the CCTV inspection to capture as much of the invert of the pipe as possible. In pipes 21 inches or larger, where sonar or multi-sensor inspection is specified, flow diversion is not required.

B. A sewer line plug may be installed upstream of the section being inspected. Sewer plugs are always installed in the upstream (incoming) pipe of a manhole. It is desirable that the plug be equipped with an air hose to permit deflation from above ground. A strong rope should be attached to enable the plug to be quickly pulled out of the manhole. Care must be taken to prevent a plug from being pushed into the outgoing pipe when the backed-up sewage is released.

C. When pumping and diverting flow is required, pumps, conduits, and other equipment shall be used to divert the flow of sewage around the manhole section in which work is to be performed. The diversion system should have sufficient capacity to handle the existing flow plus additional flow that may occur. Bypass pumping plan to be submitted to the City for approval.

D. When the flow in a sewer line is reduced, plugged, or diverted, precautions must be taken to ensure that the operations do not cause flooding or damage to public or private property. Contractor should closely monitor sewer surcharging upstream of the manhole section being inspected and be alert for situations such as residential flooding that would be likely to occur. Contractor is responsible for all backups, spills, or damage that may occur from plugging or diversion efforts.

3.08 CABLE FOOTAGE METER CALIBRATION

A. Calibration of the cable footage meter shall be done by checking the cable counter against a pre-measured length of 50 to 300 feet. At least one out of every five calibrations shall be in excess of 200 feet.

B. At a minimum, calibration of the cable footage meter shall be conducted each day before the first use of the equipment, or as directed by the City.

C. If a cable footage meters fails a calibration test, then all inspections completed since the last successful calibration shall be re-inspected at no additional cost to the City.

D. The results of all calibration testing shall be submitted in accordance with paragraph SUBMITTALS.

E. In no case shall footage readings start at anything more than 0.00.

3.09 PIPE PREPARATION

A. As needed or as indicated in the Contract Documents, the Contractor shall clean the sewer lines in accordance with Section 02676 – Sewer Line Cleaning prior to CCTV work.

B. All fog condensation shall be evacuated from the pipeline and the pipeline kept clear of any fog condensation during the inspection process.

C. When sonar or multi-sensor inspection is specified for pipes 21 inches and larger, inspection shall be performed prior to any cleaning, to provide evidence that cleaning

is required. Post verification inspections shall be a combination of CCTV and/or Sonar, as flow permits.

3.10 INSPECTION METHODS

A. Camera image shall be down the center axis of pipe when camera is in motion. Provide 360-degree sweep of pipe interior at points of interest to more fully document condition of existing sewer. Points of interest may include, but are not necessarily limited to, the following: defects, obstructions, encrustations, mineral deposits, debris, sediment, lateral connections, and any location determined not to be clean.
B. The direction of the camera should be noted. Per NASSCO standards, inspections in the downstream direction are preferred.
C. The display shall always begin with the numbering from upstream manhole to downstream manhole. If a reverse setup is attempted, the same numbering system will be used, but the direction of camera will be switched.
D. The television camera shall be a self-propelled unit.
E. The rate of camera travel shall be slow enough to allow a thorough inspection of each pipe joint, tee connection, structural deterioration, defect, I/I source, deposits in the sewer line, and to record observations.
F. The camera travel speed shall not exceed a rate of 30 feet per minute.
G. Lighting during the inspection should adequately, but not excessively, illuminate the immediate area.

3.11 RECORDING OF FEATURES AND DEFECTS

A. The CCTV Inspection shall capture the following minimum information:
   1. Starting point in the launch manhole panning up to see the general condition of the manhole and other incoming/outgoing pipes.
   2. Ending point at the downstream manhole (or upstream manhole for reverse setups) panning up to see the general condition of the manhole and other incoming/outgoing pipes.
   3. Defects and Points of Interest: The camera shall be stopped at each defect or other feature. The camera lens shall be rotated, panned and/or tilted to clearly show each defect or feature. The Contractor shall capture defects with still photographs.
   4. Service Connections: The camera shall be stopped at each service connection. The camera lens shall be rotated, panned and/or tilted to clearly show each connection. The Contractor shall capture service connections with still photographs.

3.12 INSPECTION AND DOCUMENTATION

A. PACP Pipe Run Report:
   1. A separate inspection form, otherwise known as a pipe run report, shall be produced for inspections of each complete sewer length between manholes.
   2. The Pipe Run Report shall be completed in accordance with the latest NASSCO PACP requirements.
   3. General information should be documented on CCTV inspection field forms prior to beginning inspection activity for each pipe run section, including:
      (a) Project name.
      (b) Operator's name.
      (c) Operator's NASSCO PACP certificate number.

(d) Inspection date/time (i.e., the date that the camera initiated or completed its inspection).
(e) Pipe diameter.
(f) Pipe material.
(g) Direction of inspection (upstream/downstream).
(h) Upstream and downstream manhole numbers.
(i) Street location.
(j) Inspection footage.
(k) An alphanumeric tape/media number.
(l) The level of cleaning before, or after, the investigation.
(m) It should be noted if the pipe was cleaned before, or after, CCTV work.

4. The information documented on CCTV inspection field forms for each pipe run section should include, at a minimum, the following:
   (a) A description of each service connection, type of each service connection, and defect observed.
   (b) The location of each service connection and defect reported as the distance from the start of the inspection.
   (c) The location of each service connection and defect reported with respect to the pipe axis.
   (d) A reference to each photograph taken. Each photograph reference should include:
   The location of the photograph from the start of the inspection.
   A description of the defect or connection.
   A reference to the electronic photograph file name.
5. The field form format shall be that produced by a City approved software with PACP coding.

B. Video:
1. Electronic video shall be made for each line segment inspection.
2. All video recordings shall become the property of the City upon inspection completion and acceptance. The video cost shall be included in the unit price. Each video shall be prefaced with the following minimum information:
   (a) Inspection date.
   (b) Inspection time.
   (c) Prevailing weather conditions.
   (d) Upstream/Downstream manholes indicating connectivity.
   (e) Direction of inspection.
   (f) Pipe diameter.
   (g) Pipe material.
3. The videos shall include a report of the current inspection distance relative to the starting position.
4. The audio recording shall state the following minimum information:
   (a) Date of inspection.
   (b) Time of inspection.
   (c) Description of weather during the inspection.
   (d) Operator name.
   (e) Nearest street name.
   (f) Upstream and downstream manhole numbers.
   (g) Direction of the inspection in relation to the direction of flow.
   (h) Pipe diameter and material type.
   (i) Description of each service connection and pipe defect.

C. Photographs:
   1. Digital photographs shall be taken of each significant structural defect, I/I source, and service connection.
   2. The location of each photograph along with photograph file name shall be recorded.
   3. Photographs shall be supplied as JPEG images or another approved format.
   4. Digital photograph files are to be named as described in paragraph 2.05. D.

D. PACP Microsoft Access Database:
   1. Technical: The PACP Microsoft Access Database shall be written in the latest version. The video and photo reference location/path shall be limited to one single folder named 'Video' and 'Picture', respectively. In no event shall files be password protected or otherwise inaccessible to the City, with any incorrect field or data entries the responsibility of the Contractor.
   2. Header: The PACP Microsoft Access Database shall include, at a minimum, all the PACP mandatory header fields and the following non-mandatory or City-specific changes to the header fields:
      (a) Field 1 – Name of the Contractor in a format agreed upon with the City. (Note, this is different than the Field 1 requirement in NASSCO).
      (b) Field 7 – P/O Number. Defined as the Inspector's contract number assigned by the CITY in four (4)-digit format.
      (c) Field 8 – Work Order Number. Work order number or inspection number if assigned by the CITY.
      (d) Field 14 – Weather.
      (e) Field 20 – Inspection Technology Used.
      (f) Field 25 – Pipe Segment Reference. (Upstream Access Point UNITID_ Downstream Access Point UNITID).
      (g) Field 35 – Lining Method, if applicable.
      (h) Field 38 – Total Length (Anticipated Length from CITY GIS). Note, this field is only to be completed in the event of an MSA or partial survey.
      (i) Field 39 – Length Surveyed.
   3. All header fields shall be completed using the PACP abbreviations and units as defined in NASSCO PACP.
   4. Inspection Form:
      (a) The CCTV inspection form within the PACP access database shall be completed in accordance with NASSCO requirements and include the following additions:
      The "Video Time" shall be included at the appropriate time in the CCTV video that represents the defect or feature code.
      The remarks column shall be used to identify Drop Connections, Diversion Structure, Lamp Holes, Grit Chambers, etc.

E. If specified, the artificial intelligence (AI) software shall be used to analyze the CCTV footage in order to identify and classify each defect. The reporting of results shall be as described herein. The contractor shall rectify all discrepancies between the original pipe run report and the AI software pipe run report. The contractor shall document and track the discrepancies in order to calculate the percent accuracy of the operator and the AI software over time.

F. MACP Manhole Report:
   1. A manhole inspection form shall be produced for each manhole inspected.
   2. The Manhole Report shall be completed in accordance with the latest NASSCO MACP requirements.

3. General information shall be documented on the manhole inspection form prior to beginning the inspection for each manhole. This information includes:
   (a) Project name.
   (b) Operator's name.
   (c) Operator's NASSCO MACP certificate number.
   (d) Inspection date/time.
   (e) Unique Manhole identifier/UNITID.
   (f) Manhole diameter.
   (g) Manhole material.
   (h) Pipe sizes in/out.
   (i) Flow direction in/out.
   (j) Street/cross street location.
4. Digital photographs shall be taken of each significant structural defect, I/I source, and service connection.
5. Photographs shall be supplied as JPEG images or another approved format.
6. Digital photograph files are to be named as described in paragraph 2.05. D.

G. MACP Microsoft Access Database:
1. Technical: The MACP Microsoft Access Database shall be written in the latest version. The photo reference location/path shall be limited to one single folder named 'Picture'. In no event shall files be password protected or otherwise inaccessible to the City, with any incorrect field or data entries being the sole responsibility of the Contractor.
2. Header: The MACP Microsoft Access Database shall include, at a minimum, all the MACP mandatory header fields and the following non-mandatory or City-specific changes to the header fields:
   (a) Field 1 – Name of the Contractor in a format agreed upon with the City. (Note, this is different than the Field 1 requirement in NASSCO).
   (b) Field 7 – P/O Number. Defined as the Inspector's contract number assigned by the CITY in four (4)-digit format.
   (c) Field 8 – Work Order Number. Work order number or inspection number if assigned by the CITY.
   (d) Field 14 – Weather.
   (e) Field 20 – Inspection Technology Used.
   (f) Field 27 – Inflow Potential from Runoff.
   (g) Field 28 – Locations Details.
   (h) Field 72 – Frame Depth.
   (i) Field 88 – Wall Diameter (Length).
   (j) Field 72 – Frame Depth.
   (k) Field 88 – Wall Diameter (Length).
   (l) Field 118 – Structure ID (Pipe/Lateral Segment Reference).
3. All header fields shall be completed using the MACP abbreviations and units as defined in NASSCO MACP.
4. Inspection Form:
   (a) The Manhole inspection form within the MACP access database shall be completed in accordance with NASSCO requirements and include the following addition:
      (i) Field 106 shall be used to identify Diversion Structures, Lamp Holes and Grit Chambers.
      (ii) Field 119 shall be used to identify Drop Connections.

H. LACP Lateral Report (if specified in Section 01015):
   1. A separate inspection form, otherwise known as a lateral report, shall be produced for inspections of each lateral.
   2. The Lateral Report shall be completed in accordance with the latest NASSCO LACP requirements.
   3. General information should be documented on the Lateral inspection field forms prior to beginning the inspection of each lateral. This information includes:
      (a) Project name.
      (b) Operator's name.
      (c) Operator's NASSCO LACP certificate number.
      (d) Inspection date/time (i.e., the date that the camera initiated or completed its inspection).
      (e) Lateral diameter.
      (f) Lateral material.
      (g) Location of lateral from upstream and downstream manhole numbers.
      (h) Location of lateral with respect to pipe axis.
      (i) Type of service lateral: residential or commercial.
      (j) Street/cross street location.
      (k) Inspection footage.
      (l) An alphanumeric tape/media number.
   4. The information documented on Lateral inspection field forms for each lateral should also include, at a minimum, the following:
      (a) A description of each lateral service connection, type of each service connection (tap, saddle, etc.) and defects observed.
      (b) The location of each lateral defect reported as the distance from the start of the lateral inspection.
      (c) A reference to each photograph taken. Each photograph reference should include:
         (i) The location of the photograph from the start of the lateral inspection.
         (ii) A description of the defect or connection.
         (iii) A reference to the electronic photograph file name.
   5. The lateral field form format shall be that produced by a City approved software with LACP coding.

I. Lateral Video:
   1. Electronic video shall be made for each lateral inspection.
   2. All video recordings shall become the property of the City upon inspection completion and acceptance. The video cost shall be included in the unit price. Each video shall be prefaced with the following minimum information:
      (a) Inspection date.
      (b) Inspection time.
      (c) Prevailing weather conditions.
      (d) Upstream/Downstream manholes from lateral.
      (e) Lateral diameter.
      (f) Lateral material.
   3. The videos shall include a report of the current inspection distance relative to the starting position.
   4. The audio recording shall state the following minimum information:
      (a) Date of inspection.
      (b) Time of inspection.
      (c) Description of weather during the inspection.

(d) Operator name.
(e) Nearest street name.
(f) Upstream and downstream manhole numbers.
(g) Lateral diameter and material type.
(h) Description of each lateral service connection and connection defects.

J. Photographs:
1. Digital photographs shall be taken of each significant structural defect, I/I source, and connection.
2. The location of each photograph along with photograph file name shall be recorded.
3. Photographs shall be supplied as JPEG images or another approved format.
4. Digital photograph files are to be named as described in paragraph 2.05. D.

K. LACP Microsoft Access Database:
1. Technical: The LACP Microsoft Access Database shall be written in the latest version. The video and photo reference location/path shall be limited to one single folder named 'Video' and 'Picture', respectively. In no event shall files be password protected or otherwise inaccessible to the City, with any incorrect field or data entries being the sole responsibility of the Contractor.
2. Header: The LACP Microsoft Access Database shall include, at a minimum, all the LACP mandatory header fields and the following non-mandatory or City-specific changes to the header fields:
(a) Field 1 – Name of the Contractor in a format agreed upon with the City. (Note, this is different than the Field 1 requirement in NASSCO).
(b) Field 7 – P/O Number. Defined as the Inspector's contract number assigned by the CITY in four (4)-digit format.
(c) Field 8 – Work Order Number. Work order number or inspection number if assigned by the CITY.
(d) Field 14 – Weather.
(e) Field 20 – Inspection Technology Used.
(f) Field 25 – Pipe Segment Reference. (Upstream Access Point UNITID_ Downstream Access Point UNITID).
(g) Field 35 – Lining Method, if applicable.
(h) Field 39 – Length Surveyed.
3. All header fields shall be completed using the LACP abbreviations and units as defined in NASSCO LACP.
4. Lateral Inspection Form:
(a) The CCTV Lateral inspection form within the LACP access database shall be completed in accordance with NASSCO requirements and include the following additions:
(i) The "Video Time" shall be included at the appropriate time in the CCTV Lateral video that represents the defect or feature code.

3.13 2D LASER/LIDAR PROFILING INSPECTION

A. CCTV Preparation: Per CCTV inspection requirements, which includes relevant header information such as asset name, manholes, type, etc. as required in this Section. This CCTV inspection shall be used in conjunction with the profiling to complete the analysis of the pipeline.

B. Profile Inspection: Header Details shall comply with CCTV inspection requirements by the City. Standard manufacturer's headings will normally suffice, with City approval. Header Field 'Profile Direction' shall also be included. Valid inputs are

"Upstream" or "Downstream". Flow Depth for Ovality Analysis flow shall not exceed 1/3 full. For Corrosion Analysis of the pipe walls, flow shall not exceed 1/3 full and shall be performed during lowest flow period. The camera head will be configured to a central position in the pipe (+/-15%). Laser ring or 2D LIDAR sensor shall be clear, central and take up between approximately 2/3 and 3/4 of the vertical screen. Lights shall be turned off. Distance counter shall be displayed. Distance counter shall not overlap the laser ring. All other text shall be removed from screen. Camera shall be in Home position (0.0) for the entirety of the profile inspection. Recording shall be from start manhole to end manhole. Profiling shall be performed in either a forward or reverse direction however this shall be clearly displayed in the header details of the profile inspection. The camera and laser system shall be moved through the pipe at a constant speed not to exceed 10 meters or 30 feet per minute. The tractor shall not stop in the pipe during the profile inspection. The camera shall not perform pan or tilt during profile inspection. Pan and tilt shall be performed during the CCTV lights on inspection.

C. Calibration: Calibration shall be performed using the same CCTV camera and video recording medium as used for the inspection. The calibrator shall be assembled as per manufacturer's instructions and shall be performed using the exact CCTV camera and laser configuration used in the profile inspection. The calibrator shall be clearly viewed (focused) and without glare on screen. The calibrator shall be recorded in the horizontal position and in the vertical position. The video image shall be included in the submitted Inspection video.

D. CCTV Camera Lens Correction: To validate camera lens correction, a flat "Lens correction grid" shall be placed perpendicular to camera lens recorded using the same CCTV camera and video recording medium as used for the inspection. All text shall be removed from the screen. The checkers shall be clearly viewed (focused) and without glare on screen. The video image shall be recorded and be included in the submitted Inspection video.

E. Software Analysis: The inspection video shall be loaded into the profiling software. The correct camera option shall be selected based on CCTV camera used in the profile inspection. The selected camera option shall be automatically stamped into the data file so that the settings cannot be changed. The camera setting shall be displayed in the profiling data file.

   1. Horizontal and vertical calibration shall be performed on the calibration segment of the inspection video. The profile pipe selection shall be from start of pipe asset (beside start manhole) to end of pipe asset (beside end manhole), and selected using the start and end markers in the profile software. The profile software shall be tuned to the laser ring so as to provide maximum number of profile points. A water/debris mask shall be positioned to mask the highest water/debris point in the pipe.
   2. The data file shall be recorded at 25 to 30 profile cross-sections per second and linked to the profile inspection segment of the video. The recorded video shall be used to provide quantitative information of pipe diameter, ovality and corrosion.

F. Laser Profile Data: A NASSCO/PACP certified CCTV operator with profiler software training (Ovality analysis only) or a qualified profiler analyst employed by the equipment manufacturer shall be used to analyze and report structural condition of pipeline using all or some of the following sensors: laser, CCTV. Due to the complex nature of corrosion, all Corrosion and/or Wall Loss Reports must be created by a qualified profiler analyst employed by the equipment manufacturer.

G. Ovality Reports: The Condition Analysis of Plastic Pipe: Ovality (as per ASTM F1216). Reports shall be presented as an Ovality Observation Report - a line graph displaying Ovality of the pipe over the length of the inspected pipe asset. Where water or debris exists, the software shall use a mask for the non-structural segment to calculate Ovality. A 'Match to Reference Shape and Size' observation shall be shown for each pipe highlighting a cross-section where the actual pipe shape and size closest matches (as determined by engineer):

1. The As-Built diameter, or
2. The median calculated diameter over the entire pipe length
3. Cross-sectional observations should be taken where the structural Ovality threshold exceeds 5% (or as directed by the municipality).
4. Project reports are to be shown as One Mile Ovality Flat Reports – made up of a colored flat graph and a line graph that clearly shows ovality over the 5% threshold (or as directed by the municipality).
5. The flat graph is a colored map of the circular dimensions of the pipe over the length of the inspected pipe asset. Measured pipe ID that coincides with expected values must be coded white.
6. Areas where the data is greater than the pipe ID must be colored on a yellow/red color scale. Areas where the data is smaller than the pipe ID must be colored on a blue scale. The line graph will be aligned with the flat graph, clearly showing ovality above the desired threshold.
7. Deflection Reports – Alternative Option for Condition Analysis of Plastic Pipe
   a. X and Y Diameter Reports shall be presented as an XY Deflection Observation Report – a line graph displaying and XY deflection of the pipe over the length of the inspected pipe asset. Where water or debris exists, the software shall use a mask for the non-structural segment to calculate the X and Y diameters. A 'Match to Reference Shape and Size' observation shall be shown for each pipe highlighting a cross-section where the actual pipe shape and size closest matches the median calculated diameter for each cross-section
   b. Cross-sectional observations should be taken where the X and Y deflection threshold exceeds 5% (or as directed by the municipality).

H. Corrosion Reports: The Analysis of Concrete Pipe – Corrosion, Wall Loss and Buildup Reports shall be presented in a Flat Observations Report. A color map of the circular dimensions of the pipe over the length of the inspected pipe asset. Measured pipe ID that coincides with expected values must be coded white. Material loss (corrosion), as measure by increasing pipe ID must be colored on a yellow/red color scale, with red color set to ½ of the expected wall thickness. Material gain (buildup), as measured by decreasing pipe ID, must be on a blue color scale. A "Match to Reference Shape and Size" observation should be shown for each pipe highlighting a cross-section where the actual pipe shape closest matches the reference shape and size. Cross-sectional observations should be taken to highlight areas of worst corrosion. Due to the complex nature of corrosion, all Corrosion Reports must be created by a qualified profiler analyst employed by the equipment manufacturer.

3.14 SONAR INSPECTION

A. The purpose of the Sonar inspection shall be to document conditions as specified in this Section and as a pre-cleaning evaluation. The Contractor shall document sewer line operational and structural conditions and/or cleaning results.

B. The Contractor shall keep Sonar Inspection Logs providing location records of the sewer mains inspected. The Logs shall be kept and maintained by the Contractor in a digital format. These location records shall clearly show the stationing location from manhole to manhole. Hard copies of the inspection reports shall be bound and submitted to the City with the digital data. The digital information shall contain multiple video inspection records and files that store each line segment as a unique digital record.

C. The Contractor shall use CCTV to assess the condition of the pipe above the flowline and sonar inspection to assess the condition below the flowline. The Contractor shall provide a digital video file of the inspection. The digital video files must include the location of the line segment at the time the inspection is performed. At a minimum, the video file shall also display manhole numbers and footage at all times. The purpose of the digital recording is to provide a visual record of all line segments that are inspected. Slow motion and stop-motion features shall also be provided. The Contractor shall have all digital video and necessary playback equipment readily accessible for review by the City during the project. The digital video file shall be a deliverable and shall be required for completion of the work for each segment inspected. The digital video files (recorded on the approved digital storage media) shall be indexed with the line segment and labeled appropriately on the disc. Video recordings shall be processed by the Contractor and delivered to the City after completion of the Sonar inspection for review. Video and reports shall be submitted via hard copy, CD-ROM, removable hard drive or DVD Data disk.

D. The Contractor shall provide pipeline reports containing visual profile, profile comparison and dimension data of significant defects where flows are greater than 12-inches in depth. The report shall include longitudinal pipeline cross sections showing the debris profile and depth, volume and cross-sectional area along the length of pipe.

3.15 3D LIDAR INSPECTION

A. CCTV Preparation: Per CCTV inspection requirements, which includes relevant header information such as asset name, manholes, type, etc. as required in this Section. This CCTV inspection shall be used in conjunction with the profiling to complete the analysis of the pipeline.

B. LIDAR Inspection: Header Details shall comply with CCTV inspection requirements by the City. Standard manufacturer's headings will normally suffice, with City approval. Header Field 'Profile Direction' shall also be included. Valid inputs are "Upstream" or "Downstream". Flow Depth for Ovality Analysis flow shall not exceed 1/3 full. For Corrosion Analysis flow shall not exceed 1/3 full and shall be performed during lowest flow period. The camera head will be configured to a central position in the pipe (+/-15%). Recording shall be from manhole to manhole. Scanning shall be performed in either a forward or reverse direction. Scans shall be taken when the robotic unit is stopped and stabilized to reduce shift in the point cloud scans. For Ovality, Wall Loss and Corrosion assessment, a scan must be taken every 5-6 linear feet and must be tagged with the tether distance to determine location the scan was taken in the pipe. For Alignment, Bend Radius, and Virtual Mandrel Analysis, a scan must be taken every 2-3 linear feet and must be tagged with the tether distance to determine location the scan was taken in the pipe.

C. LIDAR Data: Due to the complex nature of LIDAR data. All reports must be created by a qualified profiler analyst employed by the equipment manufacturer. This

includes Ovality, Wall Loss, Corrosion, Alignment, Bend Radius, and Virtual Mandrel Reports.

D. Ovality Reports: The Condition Analysis of Plastic Pipe: Ovality (as per ASTM 1216). Reports shall be presented as an Ovality Observation Report - a line graph displaying Ovality of the pipe over the length of the inspected pipe asset. Where water or debris exists, the software shall use a mask for the non-structural segment to calculate Ovality. A 'Match to Reference Shape and Size' observation shall be shown for each pipe highlighting a cross-section where the actual pipe shape and size closest matches (as determined by engineer):

1. The As-Built diameter, or
2. The median calculated diameter over the entire pipe length
3. Cross-sectional observations should be taken where the structural Ovality threshold exceeds 5% (or as directed by the municipality).

4. Project reports are to be shown as One Mile Ovality Flat Reports – made up of a colored flat graph and a line graph that clearly shows ovality over the 5% threshold (or as directed by the municipality).

5. The flat graph is a colored map of the circular dimensions of the pipe over the length of the inspected pipe asset. Measured pipe ID that coincides with expected values must be coded white.

6. Areas where the data is greater than the pipe ID must be colored on a yellow/red color scale. Areas where the data is smaller than the pipe ID must be colored on a blue scale. The line graph will be aligned with the flat graph, clearly showing ovality above the desired threshold.

7. Deflection Reports – Alternative Option for Condition Analysis of Plastic Pipe
   a. X and Y Diameter Reports shall be presented as an XY Deflection Observation Report – a line graph displaying and XY deflection of the pipe over the length of the inspected pipe asset. Where water or debris exists, the software shall use a mask for the non-structural segment to calculate the X and Y diameters. A 'Match to Reference Shape and Size' observation shall be shown for each pipe highlighting a cross-section where the actual pipe shape and size closest matches the median calculated diameter for each cross-section
   b. Cross-sectional observations should be taken where the X and Y deflection threshold exceeds 5% (or as directed by the municipality).

E. Corrosion and Wall Loss Reports: The Analysis of Concrete Pipe – Corrosion, Wall Loss and Buildup Reports shall be presented in a Flat Observations Report. A color map of the circular dimensions of the pipe over the length of the inspected pipe asset. Measured pipe ID that coincides with expected values must be coded white. Material loss (corrosion), as measure by increasing pipe ID must be colored on a yellow/red color scale, with red color set to ½ of the expected wall thickness. Material gain (buildup), as measured by decreasing pipe ID, must be on a blue color scale. A "Match to Reference Shape and Size" observation should be shown for each pipe highlighting a cross-section where the actual pipe shape closest matches the reference shape and size. Cross-sectional observations should be taken to highlight areas of worst corrosion. Due to the complex nature of corrosion, all Corrosion Reports must be created by a qualified profiler analyst employed by the equipment manufacturer. Deliverables shall include, but not limited to, electronic files, pdf documents, Microsoft Excel spreadsheets, or other formats requested by the City/Design Professional.

F. Alignment, Bend Radius, and Virtual Mandrel Reports: The Analysis of a pipe in preparation for rehabilitation through lining, slip-lining, or geopolymers shall be presented via plan drawings and 3D models. All LIDAR scans must be aligned and constrained to survey-grade coordinates of the access points. Any bends, horizontal or vertical deflection, or curvature of the pipe shall be noted by the location in the pipe and the radius or degree of the bend. For Virtual Mandrel Analysis, liner manufacturer specifications such as the internal diameter (ID), outer diameter (OD), joint deflection, and length of the liner segment must be provided in order to process and determine successful rehabilitation.

3.16 MULTI-SENSOR INSPECTION

A. Equipment shall be calibrated and deployed per the manufacturers' specifications. Each inspection record and recording shall be limited to a single (1) sewer segment. Combining multiple sewer segment inspections in one (1) recording shall not be permitted.

B. The Contractor shall keep Multi-Sensor Inspection Logs providing location records of the gravity lines inspected. The Logs shall be kept and maintained by the Contractor in a digital format. These location records shall clearly show the stationing location from manhole to manhole. Hard copies of the inspection reports shall be bound and submitted to the City with the digital data.

C. The multiple inspection technologies shall be used to develop a visual representation of internal pipe conditions above the flow line using Lidar-laser measurement and below the flow line using sonar measurement, combined with high-definition video inspection. The Contractor shall provide a digital video file of the inspection. The digital video files must include the location of the line segment at the time the inspection is performed. At a minimum, the video file shall also display manhole numbers and footage at all times. The purpose of the digital recording is to provide a visual record of all line segments that are inspected. Slow motion and stop-motion features shall also be provided. The Contractor shall have all digital video and necessary playback equipment readily accessible for review by the City during the project. The digital video file shall be a deliverable and shall be required for completion of the work for each segment inspected. The digital video files (recorded on the approved digital storage media) shall be indexed with the line segment and labeled appropriately on the disc. Video recordings shall be processed by the Contractor and delivered to the City after completion of the Sonar inspection for review. Video and reports shall be submitted via hard copy, CD-ROM, removable hard drive or DVD Data disk.

D. Where other sensors are used in conjunction with the CCTV, Contractor shall provide the required reports as specified in 3.13, 3.14, and/or 3.15.

3.17 FELL INSPECTION

A. The inspection shall be performed on one sewer line section (i.e., manhole to manhole or clean out to mainline) at a time. Flow within the section is irrelevant except within the area of the inspection probe, which will be 100 percent flooded to within three (3) feet of the probe in both directions.

B. The probe shall be pulled through the line a uniform rate in compliance with operator discretion. The rate of inspection should not be greater than 60 feet per minute, and the rate should not exceed the capability of encapsulating the probe with water.

C. For each gravity line inspected, executing the FELL testing shall begin with a light flushing of the gravity line and then using a hydraulic jet hose and reel to pull the

FELL probe through the pipe. The gravity line shall be flushed from the downstream manhole, the nozzle removed at the upstream manhole, a Sliding Funnel Plug shall be attached to the hose, and the FELL probe shall be attached to the Plug. The hydraulically powered jet truck shall then pull the probe through the pipeline while simultaneously providing the water necessary for the probe to electrically examine the pipe walls.

D. All data will be fed back to a PC via a standard coaxial cable. Once the data is collected on the laptop computer, it shall be uploaded to a Cloud-Based portal where it will be instantly processed and available for Owner/engineer/contractor and staff to view. This portal shall be a secure site and only accessible by Owner code and pathway security.

E. The equipment manufacturer's custom and proprietary algorithms shall be used to grade the size and type of each leak, defects, or possible defects, and graphically display the defect grade size, type and frequency for each manhole-to-manhole pipeline section. In addition, the manufacturer's software shall provide an estimated GPM gallons per minute, and GPD gallons per day infiltration rate per defect and for the entire pipeline segment being assessed. All shall be in accordance with ASTM 2550-13.

F. Contractor shall provide the fully analyzed Focused Electrode Leak Locating pipe testing results to the Owner within 72 hours of testing each section of pipe via uploading each scan to the Owner's licensed viewing platform or document management system with the following information:
   1. Owner and State.
   2. Date of Inspection.
   3. Location of Inspection.
   4. Pipeline size, type, and overall length.
   5. Graph showing:
      a. Defect start / end and overall length (ft.).
      b. Potential GPM infiltration estimation based on the hydrogeological approach.
      c. Percentage of potential GPM infiltration per defect.
      d. Defect Threshold (Small, Medium, Large).
      e. Overall chart indicating GPM Summary in Detail.

G. If specified by the City, Premium Reporting shall be provided. CCTV of the installed CIPP shall be obtained and reviewed in conjunction with the processing of FELL results. Defects shall be categorized and assigned to the main line or service connections with their associated GPM and GPD infiltration rates showing the following information:
   1. Minor flow and percentage of Total Flow.
   2. Moderate flow and percentage of Total Flow.
   3. Severe flow and percentage of Total Flow.
   4. Total GPM.
   5. Total GPD.
   6. Total GPD / IDM.

H. Acceptance of all testing shall be at the sole discretion of the City/Design Professional. The City will be responsible for the review and analysis of the post CIPP CCTV and FELL testing.

I. Correction of defects identified shall be at the sole discretion of the City.

3.18 DELIVERABLES

A. All information developed as part of this section shall be considered a record document. Management and submittal of this information shall conform to this Section, Section 00700 – General Conditions, Article 6, Contractor's Responsibilities and Section 01020 – Record Documents.

3.19 CLEAN UP

A. The Contractor shall keep premises free from accumulation of waste materials, rubbish, and other debris generated by Contractor's operations.
B. Cleanup shall be conducted in accordance with Section 01566 – Cleanup Operations.

3.20 MEASUREMENT AND PAYMENT

A. Unless otherwise specified in the Contract Documents, all work associated with cleaning and the inspection technology or technologies utilized shall be considered ancillary and will not be measured for payment. All labor, material, equipment and deliverables costs shall be included in the Bid.

END OF SECTION

SECTION 02702 – TESTING REQUIREMENTS FOR SANITARY SEWER: MAINS AND MANHOLES

PART 1 - GENERAL

1.01 SUMMARY

A. This section covers the testing of all sewer mains and manholes. The Contractor shall provide all materials, labor and equipment to complete the testing requirements in accordance with this section. All costs pertaining to testing shall be included in the lump sum bid.

1.02 SPECIFICATION MODIFICATIONS

A. It is understood that throughout this section, these Specifications may be modified by appropriate items in Section 01015 – Specific Project Requirements or as otherwise indicated on the Contract Drawings.

1.03 RELATED SECTIONS

A. Section 01015 – Specific Project Requirements.
B. Section 01300 – Submittals.
C. Section 02687 – Laser Profiling of Sewer Mains.
D. Section 03362 – Manhole Rehabilitation.
E. Section 03370 – Sanitary Sewer Manhole Construction.
F. Section 05010 – Sanitary Sewer Manhole Castings.

1.04 QUALITY ASSURANCE

A. The Contractor is responsible for the quality assurance and quality control of the Work.

1.05 INFORMATION PROVIDED BY THE CITY

A. As provided in the Contract Documents.

1.06 CODES and STANDARDS

A. The publications listed below form a part of this specification to the extent referenced. The publications are referred to within the text by the basic designation only. The version of the codes and standards in effect at the time of the Notice to Bidders shall be used, except as noted on the Drawings or in the Specific Project Requirements section of these specifications.

B. American Society for Testing and Materials (ASTM):

ASTM C828 – Low-Pressure Air Testing of Vitrified Clay Pipe Lines.

ASTM C969 – Standard Practice for Infiltration and Exfiltration Acceptance Testing of Installed Precast Concrete Pipe Sewer Lines.

ASTM C1244 – Standard Test Method for Concrete Sewer Manholes by the Negative Air Pressure (Vacuum) Test.

ASTM F1417 – Installation Acceptance of Plastic Gravity Sewer Lines Using Low-Pressure Air.

C. American Water Works Association (AWWA):

AWWA C600 – Installation of Ductile-Iron Water Mains and Their Appurtenances.

1.07 CONTRACTOR SUBMITTALS

A. Submit the following in accordance with Section 01300 – Submittals:
   1. Testing plan, procedures and schedule.
   2. Testing equipment.

PART 2 - PRODUCTS

Not Used.

PART 3 – EXECUTION

3.01 GENERAL

A. The City/Design Professional must witness the pressure and leakage test for it to be a valid test.
B. All sewer main joints and all manholes shall be watertight and free from leaks.
C. There is zero allowable leakage. All defects causing infiltration/exfiltration shall be corrected at no additional cost to the City.

3.02 SAFETY

A. All work shall be performed in accordance with applicable Occupational Safety and Health Administration (OSHA) standards.

3.03 SEWER PIPE ALIGNMENT AND GRADE TESTING

A. The alignment, grade and visible defects shall be checked as follows:
   1. Prior to inspection, the Contractor shall clean and flush the sewer main with clear water to remove excess mortar, joint sealant, dirt, debris etc.
   2. All sewer mains shall be mandrel tested to determine ovality, the presence of any misaligned, displaced, or broken pipes and other defects.
   3. All defects shall be corrected prior to conducting the pressure and leakage test.

3.04 PRESSURE AND LEAKAGE TEST FOR INFILTRATION/EXFILTRATION

A. Sewer pipe infiltration/exfiltration testing:
   1. There shall be zero leakage on the infiltration/exfiltration test.
   2. The Contractor shall perform hydrostatic or air pressure tests on all sewers before acceptance by the City. The Contractor shall provide all materials, labor and equipment required including, but not limited to, the following: water, necessary piping connections, test equipment, water meter, pressure gauges, bulkheads, and fittings required for hydrostatic or air pressure testing.
   3. Pressure and leakage testing for Infiltration/Exfiltration testing shall be conducted. Where evidence of infiltration/exfiltration is discovered by the Contractor or by the City/Design Professional, the Contractor shall repair or replace the defective reach of pipeline at no additional cost to the City. Following repair of the pipeline, the Contractor shall re-test and make additional repairs until zero infiltration/exfiltration is achieved.

4. Pressure and leakage testing for Infiltration/Exfiltration shall be performed by the Contractor using the methods as set forth below. The required testing shall be successfully performed on carrier conduits prior to filling the void between the casing and the carrier conduits with sand or the sealing of the ends of the casing conduits.
   a. Air Testing of Gravity Systems:
      (1) Each section of gravity pipeline between manholes and/or structures after backfill shall be tested as outlined below.
      (2) Contractor shall furnish all materials, labor and equipment required including necessary piping connection, test pumping equipment, pressure gauges, bulkheads, regulator to avoid over pressurization, and all miscellaneous items required.
      (3) The pipe plug for introducing air to the sewer line shall be equipped with two taps. One tap will be used to introduce air into the line being tested through suitable valves and fittings, so that the input air may be regulated. The second tap will be fitted with valves and fittings to accept a pressure test gauge indicating internal pressure in the sewer pipe. Additional valve and fitting will be incorporated on the tap used to check internal pressure so that a second test gauge may be attached to the internal pressure tap. The pressure test gauge valve may also be used to indicate loss of air pressure due to leaks in the sewer line.
      (4) The pressure test gauge shall meet the following minimum specifications:

Size (diameter)	4-1/2 inches
Pressure Range	0-15 psi
Figure Intervals	1 psi increments
Minor Subdivisions	0.05 psi
Pressure Tube	Bourdon Tube or diaphragm.
Accuracy	+/-0.25% of maximum scale
Dial	White coated aluminum with black lettering, 270degree arc and mirror edge.
Pipe Connection	Male 1/2 inch N.P.T.

      Calibration data will be supplied with all pressure test gauges. Certification of pressure test gauge will be required from the gauge manufacturer. This certification and calibration data will be available to the City/Design Professional whenever air tests are performed.
      (5) Plug ends of line and cap or plug all connections to withstand internal pressure. One of the plugs provided must have two taps for connecting equipment. After connecting air control equipment to the air hose, monitor air pressure so that internal pressure does not exceed 5.0 psig. After reaching 4.0 psig, throttle the air supply to maintain between 4.0 and 3.5 psig for at least two (2) minutes in order to allow equilibrium between air temperature and pipe walls. During this time, check all plugs to detect any leakage. If plugs are found to leak, bleed off air, tighten plugs, and again begin supplying air. After temperature has stabilized, the pressure is allowed to decrease to 3.5 psig. At 3.5 psig, begin timing to determine the time required for pressure to drop to 2.5 psig. If the time, in seconds, for the air pressure to decrease from 3.5 psig to 2.5 psig is greater than that shown in the table below, the pipe shall be presumed free of defects.

Minimum Test Times in Plastic Pipe

Pipe Diameter (in)	Minimum Time (min:secc)	Length for Minimum Time (ft)	Time for Longer Length (sec)
4	3:46	597	.380 L
6	5:40	398	.854 L
8	7:34	298	1.520 L
10	9:26	239	2.374 L
12	11:20	199	3.418 L
15	14:10	159	5.342 L
18	17:00	133	7.692 L
21	19:50	114	10.470 L
24	22:40	99	13.674 L
27	25:30	88	17.306 L
30	28:20	80	21.366 L
33	31:10	72	25.852 L
36	34:00	66	30.768 L
42	39:48	57	41.883 L
48	45:34	50	54.705 L
54	51:02	44	69.236L
60	56:40	40	85.476L

L = Total Length

If air test fails to meet above requirements, repeat test as necessary after all leaks and defects have been repaired and backfilled.
Before the manhole vacuum test is performed and in areas where ground water is known to exist, install a one-half inch diameter capped pipe nipple, approximately 10" long, through manhole wall above one of the sewer lines entering the manhole. This shall be done at the time the sewer is installed. Immediately prior to the performance of the line acceptance test, ground water level shall be determined by removing pipe cap, blowing air through pipe nipple into the ground so as to clear it, and then connecting a clear plastic tube to pipe nipple. The hose shall be held vertically and a measurement of height in feet of water shall be taken after the water stops rising in this plastic tube. The height in feet shall be divided by 2.3 to establish the pounds of pressure that will be added to all readings. If the air pressure required for the test is greater than 9 psig, the air test method will not be allowed. Instead, an infiltration test shall performed by the Contractor.

(6) If Polyvinyl Chloride (PVC) gravity sewer pipe is used it shall be air-tested in accordance with the requirements of ASTM F-1417.

b. Hydrostatic Tests for Pressure Systems (Sewer Force Mains):
   (1) Conformance Procedure: The Contractor shall perform hydrostatic pressure and leakage tests for all sewer force mains. The test shall conform to AWWA C600 procedures except as modified herein. There shall be zero leakage/drop in pressure.
   (2) Sectionalizing: Test in segments between sectionalizing valves, between a sectionalizing valve and a test plug, or between test plugs. Contractor shall furnish and install test plugs at no additional cost to the City, including all anchors, braces, and other devices to withstand hydrostatic pressure on plugs. Contractor shall be responsible for any damage to public or private property caused by failure of plugs. Limit fill rate of line to available venting capacity. Fill rate shall be regulated to limit velocity in lines when flowing full to not more than 0.05 to 1.0 fps.
   (3) Pressure and Leakage Test: Conduct at 1.5 times the maximum operating pressure, but not less than 100 psi, for a minimum of two hours:

$$L = (0.0000075\ SD(P)^{1/2})/2$$ where

L = 2 hour allowable make-up water (gallons)
S = length of pipe tested (ft.)
D = nominal pipe diameter (in)
P = test pressure (psig)

3.05 SEWER PIPE DEFLECTION TESTING

A. The mandrel testing shall be conducted again thirty days after final trench backfill.
B. The mandrel device shall be cylindrical in shape and constructed with nine (9) evenly spaced arms or prongs. Mandrels with fewer arms will be rejected as not sufficiently accurate. The rigid mandrel shall have an outside diameter (O.D.) equal to 95 percent of the inside diameter (I.D.) of the pipe. The inside diameter of the pipe, for the purpose of determining the outside diameter of the mandrel, shall be the average outside diameter minus two minimum wall thicknesses for O.D. controlled pipe and the average inside diameter for I.D. controlled pipe. Dimensions shall be per appropriate standard. The "D" mandrel dimension shall carry a tolerance of + or - 0.01 inch. Allowances for pipe wall thickness tolerances or ovality (from heat, shipping, poor production, etc.) shall not be deducted from the "D" dimension but shall be counted in as a part of the five (5) percent or lesser deflection allowance. Contact length (L) shall be measured between points of contact on the mandrel arm. The length shall not be less than twelve inches.
C. The mandrel shall be hand-pulled by the Contractor through all flexible sewer lines. Any sections of sewer not passing the mandrel test shall be uncovered and the Contractor, at no additional cost to the City, shall repair or replace the sewer to the satisfaction of the Engineer. These repaired segments shall be re-tested by the Contractor.
D. Following a successful thirty day mandrel test, all sewer mains shall be Laser Profiled, see SECTION 02687.

3.06 MANHOLE TESTING

A. All new manholes and fully rehabilitated manholes with pipe end seals installed shall be tested for infiltration/exfiltration by vacuum testing. All vacuum testing shall be performed in the presence of the City/Design Professional. Notification by the Contractor to the City/Design Professional shall be made 5 days in advance of testing. All visible defects and leaks shall be repaired by the Contractor prior to testing and then again during the warranty period.

B. Vacuum testing is required on all new manholes and fully rehabilitated manholes with a main line diameter of less than 42 inches.

C. Prior to payment for new manholes and fully rehabilitated manholes rehabilitation, the manholes shall pass the vacuum test as identified in this specification.

D. The initial vacuum test on new manholes or structure shall be conducted prior to backfilling. Vacuum testing after backfilling should be performed only after a successful non-backfill test has been completed. The Contractor shall not vacuum test backfilled manholes in the presence of ground water. All pipes entering the manhole shall be plugged at least eight (8) inches into the sewer pipe. The plug must be inflated at a location beyond the manhole/pipe gasket.

(1) All plugs shall be adequately braced to prevent the plug or pipe from being dislodged and drawn into the manhole.

(2) A vacuum of at least 10-1/2 inches of mercury shall be drawn on the manhole. The valve on the vacuum line to the manhole shall be shut and the vacuum line disconnected. The vacuum line valve shall be opened and the vacuum adjusted to 10 inches of mercury.

(3) The pressure gauge shall be liquid filled having a 3.5 inch diameter face with a reading from zero to 30 inches of mercury. The test equipment shall be capable of having two gauges connected. The gauge supplied with the test equipment shall match the reading of a gauge furnished by the City/Design Professional.

(4) The time for the vacuum reading to drop from 10 inches of mercury to 9 inches of mercury shall not be less than the following values for the manhole to be considered as passing the vacuum test:

Manhole Depth	Time in Minutes
10 feet or less	2
10.1 to 15 feet	2.5
15.1 to 25 feet	3

(5) If a manhole fails the vacuum test, the manhole shall be repaired with a City approved product and re-tested. This procedure shall be continued until all defects have been repaired and the manhole successfully passes the vacuum test.

3.07 WARRANTY

A. The Contractor shall warranty all work during the Performance and Maintenance period. All defects including infiltration/exfiltration found during the warranty period shall be corrected immediately at no additional cost to the City.

END OF SECTION

SECTION 02831 – CHAIN LINK FENCES AND GATES

PART 1 - GENERAL

1.01 SUMMARY

A. The contractor shall furnish, install and place into satisfactory operating condition chain link fencing, gates, and any specified operators. Fencing shall be provided in the alignment indicated on the drawings.

B. Fencing shall consist of steel fabric with a top rail and bottom tension wire. The fabric height shall be as indicated on drawings. Posts shall be set in concrete or sleeves.

1.02 SECTION INCLUDES

A. Fence framework. fabric, and accessories.

B. Excavation for post bases; concrete foundation for posts and center drop for gates.

C. Manual gates and related hardware.

1.03 REFERENCES

A. ANSI/ASTM Al23 - Zinc (Hot Dip Galvanized) Coatings on Products Fabricated from Rolled, Pressed, and Forged Steel Shapes, Plates, Bars, and Strip.

B. ANSI/ASTM F567 - Installation of Chain-Link Fence.

C. ASTM Al16 - Zinc-Coated (Galvanized) Steel Woven Wire Fence Fabric.

D. ASTM F1083 - Pipe, Steel Black and Hot-Dipped Zinc Coated (Galvanized) Welded and Seamless, for Ordinary Uses.

E. ASTM F1043 - Specification for Strength and Protective Coatings on Metal Industrial Chain Link Fence Framework.

F. ASTM Al21 - Zinc-Coated (Galvanized) Steel Barbed Wire.

G. ASTM AI53 - Zinc Coating (Hot-Dip) on Iron and Steel Hardware.

H. ASTM A392 - Zinc-Coated Steel Chain-Link Fence Fabric.

I. ASTM A569 - Steel, Carbon (0.15 Maximum Percent), Hot-Rolled Sheet and Strip Commercial Quality.

J. ASTM A570 - Steel, Sheet and Strip, Carbon, Hot-Rolled, Structural Quality.

K. ASTM C94 - Ready-mixed Concrete.

L. Chain Link Fence Manufacturers Institute (CUW - Product Manual.)

1.04 SYSTEM DESCRIPTION

A. Fence Height: As indicated on drawings.

B. Line Post Spacing: At intervals not exceeding 10 feet.

1.05 SUBMITTALS

A. Submit under provisions of Section 01300.

B. Shop Drawings: Indicate plan layout, spacing of components, post foundation dimensions, hardware anchorage, and schedule of components.

C. Manufacturer's Installation Instructions: Indicate installation requirements.

D. Submit items as specified in accordance with the applicable requirements in DIVISION 1.
E. Includes, but not limited to, the following:

1. Product data: Manufacturer's technical data, specifications, and installation instructions for fence and gate posts, fabric, gates, gate operator, and accessories.

2. Shop Drawings: Showing layout, location of fence, gates, posts, and including details illustrating fence height, sizes of posts, rails, braces, gates, hardware list, and accessories.

3. Mill certification that materials meet specifications of member size, strength, wall thickness, and coatings.

1.06 PROJECT RECORD DOCUMENTS

A. Submit under provisions of Section 01300.
B. Accurately record actual locations of property perimeter posts relative to property lines and easements.

1.07 QUALITY ASSURANCE

A. Perform Work in accordance with manufacturer's instructions.
B. All fencing and gates, materials and work shall be provided in accordance with best engineering and shop practice. Individual components shall be manufactured to standard sizes and gages that can be readily installed in the field. Manufacturers shall have a satisfactory field service record.
C. Provide chain-link fences and gates as complete units, including necessary erection accessories, fittings, and fastenings, from a single source or manufacturer.

1.08 QUALIFICATIONS

A. Manufacturer. Company specializing in manufacturing the products specified in this Section with minimum three years documented experience.

1.09 FIELD MEASUREMENTS

A. Verify that field measurements are as indicated on shop drawings.

1.10 DELIVERY, STORAGE, AND HANDLING

A. Deliver, store and handle all materials in a manner to ensure installation in sound and undamaged condition and to prevent damage from exposure to the elements.

PART 2 - PRODUCTS

2.01 MATERIALS

A. Framing (Steel): ASTM A569; hot rolled steel strip, cold formed to pipe configuration, longitudinally welded construction, minimum yield strength of 50 ksi (345 MPa). Roll formed shapes per ASTM A570, Grade 45.

B. Fabric Wire (Steel): ASTM A392 zinc coated wire fabric (Class 2).

C. Barbed Wire: ASTM Al21 galvanized steel; 12 gage thick wire, 3 strands, 4 points at 3 inch o.c.

D. Concrete: ASTM C94; Normal Portland Cement 2,500 psi strength at 28 days, 3 inch slump; 1/2 inch nominal sized coarse aggregate.

2.02 COMPONENTS

A. Line Posts: 2.37 inch diameter, or 1.875” x 1.625” - 1.90#/foot roll-formed sections.

B. Corner and Terminal Posts: 2.88 inch diameter.

C. Gate Posts: 4.0 inch diameter.

D. Top and Brace Rail: 1.66 inch diameter, plain end, sleeve coupled, or 1.625” x 1.25” roll-formed section, sleeve coupled.

E. Gate Frame: 2.87 inch diameter for welded fabrication.

F. Fabric: 2 inch diamond mesh interwoven wire, 9 gage thick, top selvage twisted tight, bottom selvage knuckle end closed, 2.0 oz. Galvanized per ASTM A392 - Class 2

G. Tension Wire: 6 gage thick steel, single strand.

H. Tie Wire: Aluminum alloy steel wire.

2.03 ACCESSORIES

A. Caps: Cast steel or Malleable iron galvanized; sized to post diameter, set screw retainer.

B. Fittings: Sleeves, bands, clips, rail ends, tension bars, fasteners and fittings, steel.

C. Extension Arms: Cast steel galvanized to accommodate 3 strands of barbed wire, single arm, sloped to 45 degrees.

D. Gate Hardware: Center gate stop and drop rod; two 180 degree gate hinges per leaf and hardware for padlock.

E. Swing Gates: Gates shall be hinged to swing 180 degrees from closed to open in either direction, complete with frames, latches, stops, hinges, fabric, braces, and three strands of barbed wire, unless noted otherwise on plans. Gate leaves shall have intermediate members and diagonal truss rods as required for rigid construction and shall be free from sag or twist. When adjacent fence has barbed wire, gates shall be fitted with vertical extension arms or shall have frame end members extended to carry barbed wire. Joints between frame members shall be made by welding or by means of heavy fittings, and shall be rigid and watertight.

Gate fabric shall be same as fence fabric and shall be attached to frame ends by stretcher bars, bolt hooks, or other mechanical means.

2.04 FINISHES

A. Fabric: Galvanized to ASTM A392 - Class 2 (2.0 oz per sq. ft.).

B. Hardware: Galvanized to ASTM Al53, 2.0 oz/sq. ft. coatings

C. Framework: Galvanized to ASTM F1043 external type A or B. Internal Type A, B or D.

PART 3 - EXECUTION

3.01 INSTALLATION

A. The installed fence shall conform to the alignment and finish grade indicated. All posts shall be plumb. Unless otherwise indicated on the drawings, posts shall be equally spaced approximately 10 feet apart. Where necessary, the fence grade shall be adjusted to fit the ground contour by slipping the fence fabric links. Ground surface irregularities shall be graded as required to maintain not more than 2 inch clearance below the bottom of the fence fabric.

B. Install framework, fabric, accessories and gates in accordance with ANSI/ASTM F567. Top rails and bottom tension wires shall be installed before the fabric. Top and bottom rails shall be furnished in at least 18 foot lengths and shall be securely connected to gate and terminal posts. Tension wires shall be installed approximately 6 inches above grade and shall be attached to each post and securely anchored at terminal and gate posts.

C. Where posts are set in earth, concrete foundations 36 inches deep shall be provided for line posts, terminal and gate posts shall be 42 inches deep. If bedrock is encountered, post excavation shall be continued to the 36 inch depth or 18 inches into the rock, whichever is less. Concrete foundations shall

be circular in horizontal section, not less than 10 inches in diameter for line posts, and with a diameter not less than the post OD plus 9 inches for terminal and gate posts, except that foundations in bedrock shall be a minimum of 6 inches larger than the outside dimension of the post. Foundations shall extend above the ground surface and shall be crowned approximately one inch. Concrete for foundations shall conform to the concrete section. Each foundation shall be cured for at least 72 hours before further work is done on the pos

D. Fabric shall be attached to the top rail, and bottom tension wire at 24 inch centers, and to the line posts at 15 inch centers. Barbed wire shall be fastened to each extension arm located at each post by internal clips or external fabric ties. Stretcher bars shall be provided at each gate and terminal post. Each stretcher bar shall be threaded through the fabric and anchored to the post at 15 inch centers by positive mechanical means.

E. Each gate and terminal post shall be braced by a horizontal pipe brace and an adjustable truss extending to an adjacent line post. Corner posts shall be braced in both directions.

F. Fabric shall be stretched taut and anchored so that a pull of 150 pounds at the middle of a panel will not lift the bottom of the fabric more than 6 inches.

G. All surfaces of aluminum which will be in contact with concrete, mortar, or dissimilar metals shall be given a heavy coat of coal tar paint.

H. Excavate, place concrete and install 4" O.D. posts in footings as detailed, and in accordance with the Engineer’s design. Install hanger brackets and guide roller assemblies, attach truck assemblies to hanger and make final adjustments to align gate with latch.

I. Set all posts plumb, in concrete footings with top of footing 2 inches above finish grade. Slope top of concrete for water runoff.

J. Line Post Footing Depth Below Finish Grade: ANSI/ASTM F567, 3.0 feet.

K. Corner, Gate and Terminal Post Footing Depth Below Finish Grade: ANSI/ASTM F567, 3.0 feet.

L. Brace each gate and comer post to adjacent line post with horizontal center brace rail and diagonal truss rods. Install brace rail, one bay from end and gate posts.

M. Provide top rail through line post tops and splice with 6 inch long rail sleeves.

N. Install center and bottom brace rail on corner gate leaves.

O. Stretch fabric between terminal posts or at intervals of 100 feet maximum, whichever is less.

P. Position bottom of fabric 2 inches above finished grade.

Q. Fasten fabric to top rail, line posts, braces, and bottom tension wire with tie wire at maximum 15 inches on centers.

R. Attach fabric to end, corner, and gate posts with tension bars and tension bar clips.

S. Install bottom tension wire stretched taut between terminal posts.

T. Install support arms sloped outward and attach barbed wire; tension and secure.

U. Install gate with fabric and barbed wire overhang to match fence. Install three hinges per leaf, latch, catches, drop bolt, foot bolts and sockets.

V. Provide concrete center drop to footing depth and drop rod retainers at center of double gate openings

3.02 ERECTION TOLERANCES

A. Maximum Variation From Plumb: 1/4 inch.

B. Maximum Offset From True Position: 1 inch.

C. Components shall not infringe adjacent property lines.

3.03 SCHEDULES

A. Fencing at Site: Zinc coated fabric with height as indicated on drawings, three strand barbed wire top, on 45 degree sloped arms, pointing out.

End of Section.

SECTION 02930 - SEEDING

PART 1 - GENERAL

1.01 SUMMARY

A. This section covers the operations necessary to produce grass covered areas for restoration and erosion control. The Contractor shall provide all materials, labor and equipment to complete the seeding work in accordance with this section. All costs pertaining to supply, delivery, storage, site preparation, seeding, fertilization, mulching, watering, protection, seeding repair and maintenance during the establishment period shall be included in the lump sum bid.

B. The Contractor shall sod all yards and green spaces unless the owner of the property gives written permission to seed instead of sod. Written permissions shall be made part of the project documentation included at the end of the project.

1.02 DESCRIPTION

A. All areas disturbed by construction operations shall be seeded unless otherwise specified in the contract documents to be sodded. For areas requiring sod, see Section 02931 – Sodding. Seeded areas include, but is not limited to, areas of cut and fill, trenching, temporary roads, staging areas, storage areas and site specific green spaces. The sequence of work for seeding shall be cleaning the area, adding topsoil, application of fertilizer, tilling and removing rocks, seeding, covering, firming and the application of mulch. All seeded areas shall be mulched with straw or wood cellulose fiber and watered until grass has been established.

1.03 SPECIFICATION MODIFICATIONS

A. It is understood that throughout this section, these Specifications may be modified by appropriate items in Section 01015 – Specific Project Requirements or as otherwise indicated on the Contract Drawings.

1.04 RELATED SECTIONS

A. Section 01000 – General Project Requirements.
B. Section 01015 – Specific Project Requirements.
C. Section 01300 – Submittals.
D. Section 02200 – Earthwork.
E. Section 02575 – Surface Restoration.
F. Section 02931 – Sodding.

1.05 QUALITY ASSURANCE

A. The Contractor is responsible for the quality assurance and quality control of the Work. The Work shall be performed by a contractor with a proven record of performance for similar restoration and erosion control work.

1.06 INFORMATION PROVIDED BY THE CITY

A. As provided in the Contract Documents.

1.07 CONTRACTOR SUBMITTALS

A. The Contractor shall submit to the City/Design Professional for review and approval, in accordance with Section 01300 – Submittals, all specifications and data covering the proposed materials to be used for seeding operations.

B. Prior to commencing seeding operations, the Contractor shall submit the following to the City/Design Professional for review and approval:

1. Invoices and Analysis Labels. A copy of the supplier's invoices for all seed, mulch and fertilizer which shows the quantity by weight purchased for the project. The label bearing the manufacturer's guaranteed statement of analysis to ensure compliance with the specified requirements for quality and application rates.
2. Turf grass seed certification:
    a. Certify that each lot of seed has been tested by a testing laboratory certified in seed testing, within 6 months of the date of delivery. Include with the certification:
        1. Name and address of laboratory.
        2. Date of test.
        3. Lot number for each seed specified.
        4. Test Results:
            a. Name.
            b. Percentages of purity and of germination.
            c. Weed content and identity for each kind of seed furnished.
3. Mixtures: include proportions of each kind of seed.
4. Certification of sprig type and name.
5. Description of required maintenance activities and activity frequency.

1.08 PRODUCT DELIVERY, STORAGE AND HANDLING

A. Delivery of materials shall be in manufacturer's original unopened and undamaged packages. They shall be clearly marked to identify brand name, contents and order number on each package. Packages showing indication of damage that may affect the condition of contents are not acceptable.

B. Materials shall be stored in accordance with manufacturer's recommendations. Storage shall provide protective cover from moisture and damage. Materials shall be maintained at the temperature in accordance with manufacturer's recommendation.

PART 2 - PRODUCTS

2.1 MATERIALS

A. Top soil: The top soil shall be of a quality at least equal to that which exists in areas adjacent to the area to be repaired. Top soil shall be free from weed seeds, tree roots, clumps of clay, stones and other objectionable materials that hinder grading, planting and maintenance operations. See Section 02200 – Earthwork for additional requirements on topsoil.

B. Mulch: Mulch for application to seed bed areas shall be cereal grain straw or wood cellulose fiber.
   1. Straw mulch shall be baled, dry and show no signs of discoloration and mold damage.
      a. A minimum of 50 percent of weight of the herbage making up the material shall be 10 inches in length or longer.
      b. Mulch material containing weed seeds and crop seeds is not acceptable.
   2. Wood cellulose fiber shall be prepared from virgin wood fibers containing no substance or factor which might inhibit germination or growth of grass seed.
      a. The fiber shall be dyed an appropriate color to allow visual metering of its application and shall contain a tacking agent either combined with the product or added in the tank when making the slurry.
      b. Fibers shall have the property of becoming evenly dispersed and suspended when agitated in water.
      c. When sprayed uniformly on the surface of the soil, the fibers shall form a blotter-like groundcover which readily absorbs water and allows infiltration to the underlying soil.
      d. Weight specifications from suppliers for all applications, shall refer only to air dry weight of the fiber, at a standard equivalent of 10 percent nominal moisture content.
      e. The mulch material shall be supplied in packages having a gross weight not in excess of 100 pounds and shall be marked by the manufacturer to show the air dry weight content.
      f. Suppliers shall certify that laboratory and field testing of their product has been accomplished and that it meets all of the foregoing requirements pertaining to wood cellulose fiber mulch.
   3. Exception: Vegetative Type mulch will be the only acceptable type mulch used in areas where Type "C" seed is required, Type "C" seed is specified in paragraph 2.1.E.3 in this Section.

C. Starter Fertilizer: Fertilizer shall be pelleted or granulated and shall be an approved brand composed of a "Slow Release Nitrogen" fertilizer in the 1-2-1 range, such as 13-25-12 grade, uniform in composition free flowing and suitable for application with approved equipment, delivered to the site in convenient containers, each fully labeled, conforming to the applicable state fertilizer laws, bearing the name, trade mark, or trade name and a warranty of the producer.

D. Seed: Seed shall be labeled in accordance with U.S. Department of Agriculture Rules and Regulations under the Federal Seed Act and Stated seed laws. Seed shall be furnished in sealed standard containers of the vendor. Each seed container shall bear the name, trade name, or trade mark, warranty of the producer and a certificate of the percentage of the purity and germination of each kind of seed specified. Seed which has become wet, moldy or otherwise damaged in transit or in storage will not be acceptable.
   1. Seed shall have a guaranteed germination rate of 95% or greater.

2. Pure Live Seed (PLS) formula: The following formula shall be used to determine PLS for each kind of seed:

PLS (%) = [Purity (percent) x Germination (percent)]/100

E. The areas and types of seeding to be used shall be specified on the plans. The types of acceptable seed, depending upon the area, is as follows:

1. Type "A" Seed: This seeding mixture will normally be used when seeding is required in areas of established yards, shoulders, slopes in street right-of-way and any other area where a high-type seeding is deemed necessary. The seed shall be sowed at a rate of 10 lbs. PLS per 1000 square feet (436 lbs. PLS per acre). The seed mixture will be 100 percent Turf-Type Tall Fescue composed of an equal mix of three of four compatible species. The mixture shall not include any varieties of the slower growing Turf-Type Tall Fescue "Dwarf". The species shall be one of the following or as approved by the City/Design Professional:

Apache	Arid	Austin
Bonanza	Carefree	Chieftan
Cimmaron	Cochise	Falcon
Guardian	Houndog	Jaguar II
Maverick II	Mustang	Olympic
Phoenix	Rebel II	Rebel 3D
Safari	Shenandoah	Thoroughbred
Titan	Tribute	Vegas

a. The seed mixture shall also include 100 percent Annual Rye grass to provide a temporary grass stand. The seed shall be sowed at a rate of 10 lbs. PLS per 1000 square feet (436 lbs. per acre) of the Turf-Type Tall Fescue and 2 lbs. PLS per 1000 square feet (87 lbs. per acre) of the Annual Rye.

2. Type "B" Seed: This seeding mixture will be used to seed areas outside of street right-of-ways that are not maintained.

Type "B" Seed	**Minimum Pure Live Seed (PLS%)**	**Rate of Pure Live Seed (lbs. per acre)**
Alta Fescue or Kentucky 31 Fescue (Festuca Elatior Var. Arundinces)	75	90
Rye grass (Lolium Perenne or L. Multiflorum)	80	50
TOTAL		**140**

3. Type “C” Seed: This seeding mixture will normally be used in public parks, wild life refuges and other areas where this seeding mixture is deemed necessary. The types of seeding mixtures for different habitats will be as follows:

Planting Habitat	Scientific Name	Common Name	Initial or Permanent Cover	Coverage
Wet Woodland	Elymus virginicus L.	Virginia Wild Rye	P	3 lbs./ac PLS
	Cinna arundinacea L.	Woodreed	P	100 lbs./ac PLS
	Sporobolis heterolepis A. Gray	Prairie Dropseed	I,P	3 lbs./ac PLS
	Elymus canadensis L.	Canada Wild Rye	P	3 lbs./ac PLS
	Festuca octoflora	Six-weeks Fescue	I	0.5 lbs./ac PLS
	Triticum aestivum L.	Winter Wheat	I	60 lbs./ac PLS
Planting Habitat	Scientific Name	Common Name	Initial or Permanent Cover	Coverage
Dry Woodland	Elymus canadensis L.	Canada Wild Rye	P	3 lbs./ac PLS
	Elymus virginicius L.	Virginia Wild Rye	P	3 lbs./ac PLS
	Sporobolis heterolepis A. Gray	Prairie Dropseed	I,P	3 lbs./ac PLS
	Triticum aestivum L.	Winter Wheat	I	60 lbs./ac PLS
Planting Habitat	Scientific Name	Common Name	Initial or Permanent Cover	Coverage
Wet Open	Elymus canadensis L.	Canada Wild Rye	P	3 lbs./ac PLS
	Echinochloa muricata Fern.	Rough Barnyard grass	I,P	2 lbs./ac PLS
	Spartina pectinata	Prairie Cordgrass	P	200 rhiz./ac
	Leersia oryzoides	Rice Cutgrass	P	200 rhiz./ac
	Triticum aestivum L.	Winter Wheat	I	60 lbs./ac PLS

F. Herbicide: Pre-emergent herbicide shall be siduron (Tupersan).
G. Water: Water used for this work shall be furnished by the Contractor.

PART 3 - EXECUTION

3.1 SAFETY

A. Perform all work in accordance with applicable Occupational Safety and Health Administration (OSHA) standards.

3.2 INSTALLATION

A. Time and Conditions: The seeding work shall not be started until all earthwork has been completed in accordance with Section 02200 – Earthwork. Backfills and fills shall be allowed to settle and the topsoil spread and finish-grading completed before seeding work is started.
B. Personnel and equipment: All seeding work shall be performed by a contractor having demonstrated experience in seeding on projects of similar size. The work shall be performed by experienced personnel who are familiar with project requirements and are under the supervision of a qualified foreman at all times when the work is in progress.
C. Equipment: The Contractor shall have access to equipment such as a fertilizer spreader, farm tractor with tilling equipment, grass seed drill or cultipacker type seeder, mulch blower, hydro-mulcher and straight serrated disk for crimping mulch into the soil.
D. Clearing: Prior to grading and tilling, vegetation that may interfere with operations shall be mowed, grubbed and raked. The collected material shall be removed from the site. The surface shall be cleared of stumps, stones larger than 1 inch, roots, cable, wire, trash and other materials that might hinder the work or subsequent maintenance.
E. Grading. Established grades, as indicated on the Drawings, shall be maintained in a true and even condition. Eroded areas and areas having inadequate drainage, as indicated by ponding of water, shall be filled. Ruts, deep tracks, dead furrows and ridges shall be eliminated.
F. Application of Fertilizer: Fertilizer as specified shall be applied within 24 hours prior to the tilling operation. The fertilizer shall be distributed over the entire area to be seeded at the rate of 200 pounds per acre and incorporated into the soil to a depth of at least 4 inches by disking or harrowing methods. Fertilizing rate is equivalent to 2.3 pounds per 500 square feet.
G. Preparation of Seed Bed: After fertilizer has been applied, the areas to be seeded shall be tilled to a depth of at least 4 inches by disking, plowing, harrowing, or other accepted methods until the soil is well pulverized and smoothed with a weighted spike-tooth harrow, railroad chains, or bridge timber float drag. When a chisel plow is used, the chisels shall be set not more than 10 inches apart and the areas shall be cross or double-tilled. All areas shall be left smooth for ease of mowing. All operations shall be done in a direction parallel to the contour lines on the slope and not uphill or downhill. Areas tilled shall be maintained until seeding and mulching is complete to insure a smooth area with no gullies or depressions.
H. Application of Seed: Seeding equipment calibration tests shall be made in the presence of the City/Design Professional to determine the equipment setting required to apply the seed at the specified rates. Markers shall be used to ensure that no skips occur between successive passes of the seeder. If unplanted skips and areas are noted after germination and the growth of the grass, the unplanted areas shall be seeded at no additional cost to the Owner. The seed

box shall be kept at least half full during seeding operations to ensure even distribution of seed over all the areas seeded.

I. Hydro-seeding:
   1. Seed and fertilizer, mixed in proportions as herein specified, can be broadcast in a hydro-mulch with water which forms an emulsion covering the prepared designated areas in a uniform manner.
   2. Areas to be hydro-seeded shall be fertilized at rates specified earlier. The seed-bed shall be free of any irregularities in the surface resulting from being fertilized, or other operations, and shall be corrected to prevent formation of water pockets.
   3. Hydro-mulch used shall be a wood fiber mulch with a tackifier, such as Conwit 2000, or approved equivalent. Hydro-mulch shall be applied at a rate of 1500 lbs. per acre.
   4. Hydro-seeder filling tank should be ½ full of water before adding seed, fertilizer and hydro-mulch components. Begin agitation while adding remaining water so that a uniform mixture is obtained. Seed, fertilizer and hydro-mulch components shall not be added to water more than four (4) hours prior to application.
   5. Discharge hydro-mulch slurry mix on prepared soil for uniform distribution.

J. All seeding work shall be done between the dates of February 1 and April 15 for spring planting or August 15 and October 15 for fall planting.

I. Sowing shall be accomplished by use of an approved mechanical seeder or drill (hand spreader can be used in small areas), making sure that successive seed strips overlap to provide uniform coverage.

J. The mixtures shall be applied in a crossing pattern of two passes, each applying half of the seed required.

K. Seed should be drilled to a depth of 1/2 inch.

L. Sprigs (rhizomes) shall be broadcast evenly and uniformly on the soil surface.

M. Compaction: Immediately following the completion of seeding operations, the entire area shall be compacted by means of a roller weighing at least 60 but not more than 90 pounds per linear foot of roller or any other method approved by the City/Design Professional.

N. Application of Herbicide: Following completion of seeding operations, pre-emergent herbicide as specified shall be applied to all seeded areas at the rate of 6 pounds active ingredient per acre.

O. Mulching: Mulching shall be done within 24 hours following the seeding operation except in the case of wood cellulose type mulch.

P. Vegetative Type Mulch:
   1. Straw mulch shall be spread uniformly in a continuous blanket at a depth of not less than 1-1/2 inches and not more than 2 inches loose measurement (approximately 1-1/2 to 2 tons per acre).
   2. Mulch shall be spread by hand or by a blower type mulch spreader.
   3. Blower type mulch spreaders shall be adjusted and operated in such a manner as to prevent excessive breakage of the mulch material. If this cannot be accomplished, the mulch shall be spread by hand.
   4. Care shall be exercised to ensure that all wire from baled hay is collected as it is removed from the bale.

5. Mulching shall be started at the windward side of relatively flat areas, or at the upper part of a steep slope and continued uniformly until the area is covered.
6. The mulch shall not be bunched.
7. No mulch shall be spread unless it can be anchored on the same day.

Q. Anchoring Straw Mulch:
1. The straw mulch shall be anchored in the soil to a depth of 2 to 3 inches be a notched disk set straight or a mulch crimping machine.
2. The machine shall be weighted and operated in such a manner to secure the mulch firmly in the ground to form a soil binding mulch and prevent loss or bunching of the hay by wind.
3. Two or more passes may be required to anchor the mulch to the satisfaction of the City/Design Professional.

R. Application of Wood Cellulose Fiber:
1. Wood cellulose fiber mulch shall be applied with a hydro-mulcher at not less than 1000 pounds per acre.
2. Precautionary measures shall be taken in preventing overspray on structures, paving and plantings.

S. Watering: Promptly after seeding and mulching, wet the seed bed thoroughly. Watering shall continue so as to keep all areas moist throughout the germination period.

T. Cleanup operations within forty-eight (48) hours after completion of the construction operations:
1. The entire area shall be cleared of excess soil and waste material, including, but not limited to, stones, stumps, roots, brush, wire, grade stakes, trash and all objects that might be a hindrance to maintenance operations or affect the visual appearance of the site.
2. All roads, over which hauling operations have been conducted, regardless of the type of surfacing, shall be clean and all debris left on the surface shall be removed.
3. The wheels of vehicles shall be cleaned to avoid leaving soil upon roads, walks and other surfaced areas.

U. Water Usage:
1. All watering equipment required for the work shall be furnished by the Contractor.
2. All water obtained from fire hydrants shall be metered. See Section 01000 – General Project Requirements.

3.3 MAINTENANCE, PROTECTION AND REPAIR

A. Maintenance of Area: The Contractor is responsible for maintaining all seeded areas until acceptance by the City/Design Professional. Maintenance of the seeded areas shall include the following:
1. Established yards, shoulders, slopes in street right-of-way and all other areas where a high-type seeding is deemed necessary. All newly seeded grassed areas shall be kept in a healthy growing condition by watering, weeding, mowing, trimming, edging, etc., until completion and acceptance by the City/Design Professional. The seeded areas shall be mowed with approved mowing equipment to a height of 3 inches whenever the average height of vegetation becomes 6 inches.

2. Turf grass of one-square foot or more that does not show definite growth and establishment shall be re-seeded by the Contractor at no additional cost to the Owner. The Contractor shall continue the care and maintenance of all seeded areas as specified above until all work of this project has been satisfactorily completed and all deficiencies have been corrected at which time final inspection shall be made.
3. Areas off of street right-of-way: All seeded areas shall be maintained until acceptance by the City/Design Professional. Maintenance shall include repair of erosion damage, re-seeding, mulching and watering.

B. Protection and Repair:
1. The seeded area shall be kept free of traffic until accepted.
2. If at any time before acceptance of the completed contract, any portion of the seeded surface becomes gullied, damaged - intentionally or otherwise, or the seeding has been damaged or destroyed, the affected portion shall be repaired to re-establish the specified condition prior to the acceptance of the work.

3.4 WARRANTY

A. Seeding shall have germinated, taken root and have established satisfactory coverage before acceptance by the City/Design Professional. The Contractor shall maintain as described in paragraph 3.3 and shall guarantee seeding for one (1) year after acceptance. The Contractor shall scarify, reseed, fertilize and mulch any barren area greater than 1 square foot. See Section 02575 – Surface Restoration for requirements on early acceptance.

END OF SECTION

SECTION 02931 - SODDING

PART 1 - GENERAL

1.01 SUMMARY

A. This section covers the operations necessary to produce grass covered areas for restoration and erosion control. The Contractor shall provide all materials, labor and equipment to complete the sodding work in accordance with this section. All costs pertaining to supply, delivery, storage, site preparation, sodding, fertilization, watering, protection, sodding repair and maintenance during the establishment period shall be included in the lump sum bid.

B. The Contractor shall sod all yards and green spaces unless the owner of the property gives written permission to seed instead of sod. Written permissions shall be made part of the project documentation included at the end of the project.

1.02 DESCRIPTION

A. All areas disturbed by construction operations shall be sodded unless otherwise specified in the contract documents to be seeded. For areas requiring seed, see Section 02930 – Seeding. Sodded areas include, but are not limited to, areas of cut and fill, trenching, temporary roads, staging areas, storage areas and site specific green spaces. The sequence of work for sodding shall be cleaning the area, adding topsoil, application of fertilizer, tilling and removing rocks, sodding, covering, firming, watering and maintenance.

1.03 SPECIFICATION MODIFICATIONS

A. It is understood that throughout this section, these Specifications may be modified by appropriate items in Section 01015 – Specific Project Requirements or as otherwise indicated on the Contract Drawings.

1.04 RELATED SECTIONS

A. Section 01000 – General Project Requirements.
B. Section 01015 – Specific Project Requirements.
C. Section 01300 – Submittals.
D. Section 02200 – Earthwork.
E. Section 02575 – Surface Restoration.
F. Section 02930 – Seeding.

1.05 QUALITY ASSURANCE

A. The Contractor is responsible for the quality assurance and quality control of the Work. The sodding work shall be performed by a qualified contractor with a proven record of performance for similar restoration and erosion control work.

1.06 INFORMATION PROVIDED BY THE CITY

A. As provided in the Contract Documents.

1.07 CONTRACTOR SUBMITTALS

A. The Contractor shall submit to the City/Design Professional for review and approval, in accordance with Section 01300 – Submittals, all specifications and data covering the proposed materials to be used for sodding operations.

B. Prior to commencing sodding operations, the Contractor shall submit the following to the City/Design Professional for review and approval:

1. Invoices and Analysis Labels: A copy of the supplier's invoices for all sod and fertilizer which shows the quantity by weight purchased for the project and a representative label bearing the manufacturer's or vendor's guaranteed statement of analysis to assure compliance with specified requirements for quality and application rates.
2. Sod: Certification of seed analysis, germination rate and inoculation:
    a. Certify that each lot of seed used for sod has been tested by a testing laboratory certified in sod testing, within 6 months of date of delivery. Include with the certification:
        1. Name and address of laboratory.
        2. Date of test.
        3. Lot number for each seed specified.
        4. Test Results:
            a. Name.
            b. Percentages of purity and of germination.
            c. Weed content for each kind of sod furnished.
    b. Certification of sod: include source, harvest date of sod and type of sod.
    c. Certification of sprig type and name.
    d. Description of required maintenance activities and activity frequency.

1.08 PRODUCT DELIVERY, STORAGE AND HANDLING

A. Delivery of materials shall be in manufacturer's original unopened and undamaged packages. Packaged items shall be clearly marked to identify brand name, contents and order number on each package. Packages showing indication of damage that may affect condition of contents are not acceptable. Sod shall be supplied in rolls of uniform thickness and kept covered and moist.

B. Storage of material shall provide protective cover from damage and stored at temperatures and moisture conditions in accordance with manufacturer's and supplier recommendations. Materials shall be stacked or stored in accordance with manufacturer's and supplier recommendations.

C. Harvesting Sod:

1. Do not harvest if sod is excessively dry or wet.
2. Harvest and deliver sod only after laying bed is prepared for sodding.
3. Roll or stack to prevent yellowing.
4. Deliver and lay all sod within 24 hours of harvesting.
5. Keep moist and covered from time of harvesting until laid.

PART 2 - PRODUCTS

2.1 MATERIALS

A. Top soil: The top soil shall be of a quality at least equal to that which exists in areas adjacent to the area to be repaired. Top soil shall be free from weed seeds, tree roots, clumps of clay, stones and other objectionable materials that hinder grading, planting and maintenance operations. See Section 02200 – Earthwork for additional requirements on topsoil.

B. Sod:

1. The sod to be used as source material shall be a thick stand of Kentucky Blue grass, Turf Type Tall Fescue, Bermuda grass, Zoysia grass or other grasses as shown on the plans. For established yards, the sod shall match the species removed.
2. The sod shall contain a growth of not more than 1 percent of other grasses and clovers shall be free from all prohibited and noxious weeds.
3. The Turf Type Tall Fescue sod shall be composed of an equal mix of three or four compatible species of 100 percent Turf Type Tall Fescue. The mixture shall not include any varieties of the slower growing Turf Type Tall Fescue "Dwarf". The species shall be one of the following:

Apache	Arid	Austin
Bonanza	Carefree	Chieftan
Cimmaron	Cochise	Falcon
Guardian	Houndog	Jaguar II
Maverick II	Mustang	Olympic
Phoenix	Rebel II	Rebel 3D
Safari	Shenandoah	Thoroughbred
Titan	Tribute	Vegas

4. Kentucky Blue grass and Turf Type Tall Fescue sod shall be cut in strips of uniform thickness, the range of acceptable thickness shall be 1 1/2 to 2 inches; each strip containing at least one square yard. Sod shall be cut in strips not less than 12 inches wide.
5. Bermuda grass or Zoysia grass sods shall be cut into strips of uniform thickness, the range of acceptable thickness shall be 1 1/2 to 2 inches; each strip shall not be less than 12 inches wide and 24 inches long. Strips that crumble will not be acceptable.
6. Broken pads and torn or uneven ends will not be acceptable. Standard size sections shall be strong enough to support their own weight and should retain their size and shape when suspended vertically from a firm grasp on the upper 10 percent of the section. Sod shall not be harvested or transplanted with moisture content (excessively dry or wet) that will adversely affect its survival.
7. Sod shall be relatively free of thatch, up to 1/2 inch allowable (uncompressed). Sod shall be reasonably free of diseases, nematodes and soil-borne insects. State nursery and/or plant materials laws require that all sod entering inter-state commerce be inspected and approved for sale. The same applies to sod being shipped intra-state. The inspections and approval must be made by the state agricultural department, office of the state entomologist.

C. Fertilizer shall be inorganic 12.12.12 or 13.13.13 grade, uniform in composition, free flowing and suitable for application with approved equipment, delivered to the site in convenient containers, each fully labeled, conforming to applicable state fertilizer laws, bearing the name, trade name, or trade mark and warranty of the producer.

PART 3 - EXECUTION

3.1 SAFETY

A. Perform all work in accordance with applicable Occupational Safety and Health Administration (OSHA) standards.

3.2 PREPARATION

A. All sodding work shall be performed by a contractor having demonstrated experience in sodding on projects of similar size. The work shall be prepared by experienced personnel who are familiar with the required work and who are under the supervision of a qualified foreman at all times when the work is in progress.

B. Preparation of areas to be sodded shall include filling, reshaping or eroded areas, cleaning ditches and refinishing slopes to the established grade section. The area shall be cleared of stumps, stones larger than 1 inch, roots, cable, wire, trash and other materials that might hinder the work or subsequent maintenance.

C. Application of Fertilizer: Before tilling operations, fertilizer shall be spread uniformly at the rate of 300 pounds per acre. Fertilizing rate is equivalent to 3.5 pounds per 500 square feet.

D. Preparation of Sod Bed:

1. After fertilizer has been applied, the areas to be sodded shall be tilled to a depth of at least 2 inches by disking, plowing, harrowing, or other accepted methods until the soil is well pulverized and smoothed with a weighted spiketooth harrow, railroad chains, or bridge timber float drag. When a chisel plow is used, the chisels shall be set not more than 10 inches apart and the areas shall be cross or double-tilled. All areas shall be left smooth for ease of mowing. All operations shall be done in a direction parallel to the contour lines on the slope and not uphill or downhill.
2. Grade areas to smooth, even surface with loose, uniformly fine texture.
    a. Roll and rake, remove ridges, fill depressions to meet finish grades.
    b. Limit such Work to areas to be planted within immediate future.
    c. Remove debris, stones larger than 1 inch diameter and other objects that may interfere with planting and maintenance operations.

3.3 INSTALLATION

A. Time and Conditions. The sodding work shall not be started until all earthwork has been substantially completed. Backfills and fills shall be allowed to settle and the topsoil spread and finish-grading completed before the work is started. Failure to account for settlement prior to placement of topsoil and sod may result in rework of the area.

B. Application of Sod: Kentucky Blue grass and Turf Type Fescue sod shall not be placed during a drought or during the period from June 1 to September 1, unless authorized by the

City/Design Professional and shall not be placed on frozen ground. Bermuda and Zoysia sods shall only be placed during the period from May 1 to October 15. The City/Design Professional reserves the right to delay the sodding of all types of sod or to vary the permissible sodding seasons, due to weather, soil conditions, or for other causes.

C. Sod Placement: Sod shall be moist when it is placed. Sod strips shall be laid along contour lines, commencing at the lowest point of the area and working upward. The transverse joints of sod strips shall be staggered and the sod carefully placed to produce tight joints. If necessary to walk excessively on newly laid sod, walking boards should be laid for this purpose. The sod shall be firm and watered immediately after it is placed. The "firming" shall be accomplished by application of a roller weighing not less than 60 nor more than 90 pounds per linear foot of roller or other approved method.

D. Anchoring Sod: On slopes 2:1 or steeper, the sod shall be anchored using garden staples.

E. Watering: Promptly after sodding, wet the sod thoroughly. Watering shall continue so as to keep all areas moist until acceptance by the City/Design Professional.

F. Water Usage:
   1. All watering equipment required for the work shall be furnished by the Contractor.
   2. All water obtained from fire hydrants shall be metered. See Section 01000 – General Project Requirements.

G. Cleanup Operations within forty-eight (48) hours after completion of the construction operations:
   1. The entire area shall be cleared of excess soil and waste material, including, but not limited to, stones, stumps, roots, brush, wire, grade stakes, trash and all objects that might be a hindrance to maintenance operations or affect the visual appearance of the site.
   2. All roads, over which hauling operations have been conducted, regardless of the type of surfacing, shall be clean and all debris left on the surface shall be removed.
   3. The wheels of vehicles shall be cleaned to avoid leaving soil upon roads, walks and other surfaced areas.

3.4 MAINTENANCE, PROTECTION AND REPAIR

A. Maintenance of Area. The Contractor shall be responsible for maintaining all sodded areas until acceptance by the City/Design Professional. Maintenance of the sodded areas shall include the following:
   1. All newly sodded grassed areas shall be kept in a healthy growing condition by watering, weeding, mowing, trimming, edging, etc., until completion and acceptance by the City/Design Professional. The sodded areas shall be mowed with approved mowing equipment to a height of 3 inches whenever the average height of vegetation becomes 6 inches.
   2. Turf grass of one-square foot or more that does not show definite growth and establishment shall be re-sodded by the Contractor at no additional cost to the Owner. The Contractor shall continue the care and maintenance of all sodded areas as specified above until all work of this project has been satisfactorily completed and all deficiencies have been corrected at which time final inspection shall be made.

B. Protection and Repair:
   1. The sodded area shall be kept free of traffic until accepted.

2. If at any time before acceptance of the completed contract, any portion of the seeded surface becomes gullied, damaged - intentionally or otherwise, or the seeding has been damaged or destroyed, the affected portion shall be repaired to re-establish the specified condition prior to the acceptance of the work.

3.5 WARRANTY

A. Sodding shall have taken root and have established satisfactory coverage before acceptance by the City/Design Professional. The Contractor shall maintain as described in paragraph 3.4 and shall guarantee sodding for one (1) year after acceptance. The Contractor shall scarify, re-sod, fertilize and water any dead or barren area greater than 1 square foot. See Section 02575 – Surface Restoration for requirements on early acceptance.

END OF SECTION

SECTION 03000 - MISCELLANEOUS CONCRETE

PART 1 - GENERAL

1.1 SCOPE

A. The Contractor shall perform all concrete work as required to complete the work specified in the contract documents.

B. This section covers miscellaneous concrete work associated with the construction of water, wastewater and stormwater infrastructure. This section does not apply to concrete work associated with surface restoration. See Section 02575 – Surface Restoration for concrete requirements associated with curb, gutter, sidewalk and street work.

1.2 RELATED SECTIONS

A. Section 03370 – Sanitary Sewer Manhole Construction.

B. Section 03608 – Concrete Vaults.

1.3 CODES AND STANDARDS

A. The publications listed below form a part of this specification to the extent referenced. The publications are referred to within the text by the basic designation only.

B. American Society for Testing and Materials (ASTM):

ASTM A615	Deformed and Plain Billet Steel Bars for Concrete Reinforcement.
ASTM C31	Test Methods of Making and Curing Concrete Test Specimens in the Field.
ASTM C33	Concrete Aggregates.
ASTM C39	Test Method for Compressive Strength of Cylindrical Concrete Specimens.
ASTM C94	Ready-Mixed Concrete.
ASTM C143	Standard Test Method for Slump of Hydraulic-Cement Concrete.
ASTM C150	Portland Cement.

C. American Concrete Institute (ACI):

ACI 304	Recommended Practice for Measuring, Mixing, Transporting and Placing Concrete.
ACI 305	Committee Report on Hot-Weather Concreting.
ACI 306	Committee Report on Cold-Weather Concreting.
ACI 309	Recommended Practice for Consolidation of Concrete.
ACI 318	Building Code Requirements for Reinforced Concrete.
ACI 347	Recommended Practice for Concrete Formwork.

1.4 SUBMITTALS

A. Contractor shall submit product data for review on the following items required by this Division:

1. Laboratory name.
2. Aggregate testing and gradation.
3. Design mix.

B. Product data shall be submitted in accordance with Section 01300 – Submittals.

PART 2 - PRODUCTS

2.1 CEMENT

A. Cement shall conform to ASTM C150, Type I, unless high early strength is required in which instance Type III shall be used. Cement may be bagged or bulk.

2.2 FINE AGGREGATE

A. Fine aggregate, clean natural sand, shall conform to ASTM C33 and have the following gradation:

Sieve	% Passing	% Retained
3/8"	100	0
#4	95-100	0-5
#8	80-100	0-20
#16	50-85	15-50
#30	25-60	40-75
#50	10-30	70-90
#100	2-10	90-98

2.3 COARSE AGGREGATE

A. Clean crushed rock, washed gravel, or other inert granular material, except that clay and shale particles shall not exceed one percent. Coarse aggregate shall conform to ASTM C33 and have the following gradation:

Sq. Sieve	% Passing	% Retained
3/4"	90-100	0-10
3/8"	20-55	45-80
#4	0-10	90-100
#8	0-5	95-100

2.4 WATER

A. Potable water from a municipal or other public water supply district shall be used for mixing and curing.

2.5 REINFORCING STEEL

A. Reinforcing Steel:
   1. Reinforcing steel bars shall conform to the requirements of the following Standards and Grades:
      (a) ASTM A615: Grade 40 or 60.
      (b) ASTM A616: Grade 50 or 60.

B. Bending details shall conform to ACI 318.

2.6 FORMS AND FORMWORK ACCESSORIES

A. Forms:
   1. Suitable and substantial forms shall be provided. All forms shall be constructed and maintained plumb and true to line, securely braced, tied, clamped and shored in order to prevent leakage of concrete and prevent deflection or displacement of forms during

placement of concrete. All exposed corners and edges shall have 1" fillets. All joints shall be mortar tight; open joints shall be sealed as required.

2. Where applicable, undisturbed earth may be used in lieu of forms.
3. The deflection of the forms due to the weight and rate of placing concrete, placing equipment, and workmen shall be accurately figured and taken into account in the design of the forms so that finished concrete members will have surfaces, lines, planes, and elevations required within tolerances in accordance with ACI 117.
4. All forms shall be removed prior to backfill unless the following conditions are met:
   (a) As directed by the City.
   (b) When constructed of unbraced plywood having a thickness of ½-inch or less, removal shall be optional unless otherwise directed by the City.
5. Forms shall be constructed so that they can be removed without damage to the concrete.

B. Formwork accessories:
1. Forms shall be securely braced and tied with approved form ties that do not leave any parts within 3/4 inch of the surface of the concrete. Wire ties and wood spreaders will not be permitted.

2.7 CONCRETE MIX

A. Concrete:
1. Concrete shall conform to KCMO PW 2208 except as follows:
   (a) Limestone may be used as coarse aggregate.
   (b) Design strength of concrete shall be 4,500 psi or greater at 28 days.
   (c) Maximum slump shall be 4 inches. Determination of slump shall conform to ASTM C143.
   (d) Coarse Aggregate: 1-inch maximum.
   (e) Air entrainment admixture is required to provide 4 to 6 percent entrained air when placed, in conformance with ASTM C185.
   (f) Water reducing admixture is required.
2. Ready mix concrete shall be supplied by a plant approved by the KCMO Public Works Department according to the Ready Mix Concrete Quality Management Plan. Submit ready mix concrete plant information in accordance with paragraph SUBMITTALS.
3. Submit concrete mix design in accordance with KCMO PW 2208.C and in accordance with the paragraph SUBMITTALS.

B. Concrete shall be delivered to the site in conformance with ASTM C94.

PART 3 - EXECUTION

3.1 REINFORCING STEEL AND CONCRETE

A. Placing of Reinforcing Steel:
1. Before being installed in the final position, all metal reinforcements shall be free of mud, clay, ice, grease, oil, loose rust and scale, and other coatings that would reduce or destroy the bond.
2. Metal reinforcements shall be accurately formed and positioned to the required dimensions. All bars are to be accurately placed and securely tied at all intersections.
   All reinforcing steel shall be placed so it is covered with a minimum of 3″ of concrete.
3. Steel reinforcements shall be accurately positioned as required and shall be secured against displacement by using annealed wire ties or suitable clips at all intersections.
4. The steel reinforcements shall be supported by metal supports, spacers, or hangers.
5. The legs on the metal chair supports shall be plastic coated.

B. Forms:
   1. Verify lines, levels and centers before proceeding with formwork.
   2. A coat of non-staining oil, lacquer, or other approved material shall be applied to protect form surface and to facilitate stripping. Coating shall be applied in strict accordance with the directions of the manufacturer.
   3. Forms shall be removed in such manner as to assure the complete safety of the structure. In no case shall supporting forms or shoring be removed until the concrete has acquired sufficient strength.
C. Placing of Concrete:
   1. Only those methods and arrangements of equipment shall be used which will reduce to a minimum any segregation of coarse aggregate from the concrete.
   2. Every consideration shall be given to the proper placement of all concrete and the proper care of all concrete after placement.
   3. Concrete shall be deposited into the forms or on the grade as nearly as practicable in its final position and in such manner that the concrete will completely fill the forms.
   4. Vibration shall not be used to move concrete in a horizontal direction after initial placement.
   5. Concrete that has partially hardened or has been contaminated by foreign material shall not be deposited in the Work and shall be removed from the Site at no additional cost to the City.
   6. When inclined chutes beyond the mixer are permitted by the City, a baffle shall be provided at the bottom end so that concrete will drop vertically without segregation.
   7. No water shall be added to the concrete for any reason at the job site that will result in exceeding the specified water-cement ratio. Any water withheld when batching the concrete shall be noted on the material delivery ticket.
   8. Care shall be taken to assure proper concrete coverage of reinforcing steel as designed.
   9. Placement operations shall be performed in such a manner as to prevent loose earth falling into the excavation during placement of concrete.
   10. Concrete that might contact forms or reinforcing steel during placement shall be placed by the use of trunks or pipes whenever the drop exceeds six (6) feet for unexposed work, or three (3) feet for exposed work.
   11. When trunks or pipe are used, they shall be located at horizontal spacing of not to exceed ten (10) feet.
   12. Concrete for thrust restraints shall be placed in horizontal layers not exceeding two (2) feet in depth.
   13. Placing of concrete in thrust restraints shall be done in such manner as to prevent "cold joints," both horizontally and vertically.
D. Vibrating:
   1. In conformance with ACI 309, mechanical internal vibrators shall be used whenever possible in all formed concrete work.
   2. Vibrators shall be inserted at uniform spacing of twelve (12) inches to twenty (20) inches to assure thorough consolidation of all concrete.
   3. Vibrators shall be inserted and withdrawn vertically to a depth, which will assure penetration into the previous lift with vibration periods of from five (5) to fifteen (15) seconds.
   4. Form vibration and/or hand spading will be required at points inaccessible for thorough internal vibration.
   5. During placement of concrete, stand-by vibrators shall be immediately available in the event of mechanical failure in the vibrators being used.

E. No concrete shall be deposited below water. The excavation may be damp but shall contain no water.
F. Concrete shall be conveyed from the mixer to the place of final deposit by methods which will prevent the separation or loss of materials. Retempering of concrete is not permissible.
G. For formed surfaces, the Contractor shall break off ties, grout voids which are deeper than ½" and chip out honeycombed areas to solid concrete and grout flush with formed surface.
H. Curing shall be maintained continuously for seven days after placing concrete or until forms are removed and the surface finished. Concrete surface temperature is to be maintained between 50ºF and 100ºF for at least seven days.
I. Concrete shall not be placed on iced or frozen subgrade or when the air temperature is below 20ºF. Concreting shall not be continued when the air temperature is below 45ºF unless the following conditions are attained:
   1. Mixing water shall be heated (to a maximum of 150ºF).
   2. Aggregates shall be heated until free of all ice and frost.
   3. The concrete temperature after mixing shall be between 50ºF and 70ºF if the air temperature is 20ºF to 45ºF.
   4. After the concrete is placed, it shall be covered, protected, and heated so as to maintain a minimum of 70ºF air temperature for the 24 hours and 50ºF air temperature for the next six days. Open-flame type heaters are not permitted. Heating equipment not vented outside of the covering will not be permitted.
   5. Moist conditions shall be maintained during the heating period.
   6. All covering, heating equipment, etc., shall be on hand and approved by the Engineer before any concrete is placed.
J. Calcium chloride, as an admixture, shall not be used.
K. Exposed concrete is not to be placed in air temperatures above 100ºF. Cover, protect and cool work as to maintain the temperature of the concrete below 100ºF. The concrete temperature, after mixing, shall not be greater than 85ºF. Spray and/or shade aggregate piles and cool mixing water as required.

3.2 CONCRETE TEST CYLINDERS

A. All concrete test cylinders shall be provided by a certified testing laboratory. The testing of test cylinders, including transportation, shall be paid for by the Contractor.
B. The laboratory shall make at least three test cylinders for each day's pour in excess of 10 cubic yards of each class of concrete, and three test cylinders for each additional 50 cubic yards or major fraction thereof, as directed by the Engineer.
C. The laboratory shall ship the test cylinders to the laboratory on the second day, where the laboratory shall proceed to cure until tested. One cylinder shall be tested on the seventh day, and the remaining cylinders shall be tested on the 28th day. The test cylinders shall be identified at the time cast, and as to which pour is represented. Unsatisfactory tests of cylinders shall make the concrete represented subject to rejection, with consequent removal and replacement required.
D. Concrete test cylinders shall be cast and tested in accordance with ASTM C31 and C39. The testing laboratory shall furnish four copies of test reports for test cylinders and distributed as follows:
   1. 2 copies – City.
   2. 2 copies – Contractor.

3.3 CLEANUP

A. Cleanup operations shall be conducted in accordance with Section 01566 – Cleanup Operations

END OF SECTION

SECTION 03362 – SANITARY SEWER MANHOLE REHABILITATION

PART 1 - GENERAL

1.01 SUMMARY

A. This section covers all labor, work, materials and equipment required for repairing voids, restoring the structural integrity of manholes in corrosive and noncorrosive environments, eliminating infiltration and providing corrosion protection (antimicrobial additive or epoxy).

B. This shall be accomplished by applying a monolithic fiber reinforced cementitious liner to the entire manhole including the corbel, wall, bench and channel surfaces after all necessary surface preparation as recommended by the manufacturer is completed, including performing proper cleaning, stopping infiltration and creating a correct surface profile.

1.02 SPECIFICATION MODIFICATIONS

A. It is understood that throughout this section these Specifications may be modified by appropriate items in Section 01015 – Specific Project Requirements, or as otherwise indicated on the Contract Drawings.

1.03 RELATED SECTIONS

A. Section 01000 – General Project Requirements.
B. Section 01015 – Specific Project Requirements.
C. Section 01300 – Submittals.
D. Section 01320 – Construction Progress Documentation.
E. Section 01700 – Traffic Control.
F. Section 02575 – Surface Restoration.
G. Section 02702 – Testing Requirements for Sanitary Sewer: Mains and Manholes.
H. Section 03370 – Sanitary Sewer Manhole Construction.
I. Section 05010 – Sanitary Sewer Manhole Castings.
J. Section 06010 – Cured-In-Place Pipe (CIPP), CIPP Point Repairs and End Seals.

1.04 CODES AND STANDARDS

A. The publications listed below form a part of this specification to the extent referenced. The publications are referred to within the text by the basic designation only.

B. American Society for Testing and Materials (ASTM):

ASTM C109	Standard Test Method for Compressive Strength of Hydraulic-Cement Mortar.
ASTM C267	Standard Test Methods for Chemical Resistance of Mortars, Grouts, and Monolithic Surfacings and Polymer Concretes.
ASTM C293	Standard Test Method for Flexural Strength of Concrete.
ASTM C496	Standard Test Method for Splitting Tensile Strength of Cylindrical Concrete Specimens.
ASTM C596	Standard Test Method for Drying Shrinkage of Mortar Containing Hydraulic Cement.
ASTM C666	Standard Test Method for Resistance of Concrete to Rapid Freezing and Thawing.

ASTM C882	Test Method for Bond Strength of Epoxy-Resin Systems used with Concrete by Slant Shear.
ASTM D638	Test Method for Tensile Properties of Plastics.
ASTM D695	Test Method for Compressive Properties of Rigid Plastics.
ASTM D790	Standard Test Methods for Flexural Properties of Unreinforced and Reinforced Plastics and Electrical Insulating Materials.
ASTM D2240	Test Method for Rubber Property – Durometer Hardness.
ASTM D4541	Test Method for Pull-Off Strength of Coating Using Portable Adhesion Testers.

C. National Association of Corrosion Engineers (NACE International):

SP0188:2006	Discontinuity (Holiday) Testing of New Protective Coatings on Conductive Substrates.

1.05 INFORMATION PROVIDED BY THE CITY

A. As provided in the Contract Documents.

1.06 SUBMITTALS

A. Submit as specified in Section 01300 – Submittals.
B. Shop Drawings.
C. Product Data:
1. Submittal detailed data pertaining to the manhole lining products, manufacturer's installation recommendations, product data, mix designs and manufacturer's installation instructions.
2. Patching Materials.
3. Infiltration control materials.
4. Cementitious Liner:
(a) Test Data:
(i) Provide third party test data verifying the properties called for in the specifications including, but not limited to compressive strength, bond strength, tensile strength, and shrinkage.
(ii) When an antimicrobial admixture is to be used (Type 2 Liners), the testing shall be performed on cementitious material with the antimicrobial admixture to be used for the Work.
(iii) Testing data shall have been conducted within 3 years prior to the date of submittal.
(b) Manufacturer's installation instructions shall include, but are not limited to, the following:
(i) Recommendations for repairs.
(ii) Minimum and maximum application temperatures.
(iii) Instructions for material handling and mixing.
(iv) Recommendations for environmental controls during application, safety, and spray equipment.
(v) Requirements for surface preparation and surface conditions.
(vi) Recommendations for curing time before the cementitious liner may be subject to flow.
(vii) Recommendations for curing time before an epoxy topcoat can be applied to the cementitious liner.
(c) Antimicrobial Additive: Provide Manufacturer's mixing and dosing recommendations.

(d) Admixture Identifier.

5. Epoxy Lining System:
   (a) Specifications.
   (b) Technical data sheets.
   (c) Installation instructions: Provide detailed and complete information pertaining to the manufacturer's instructions for installation and repair of the epoxy liner system. The information and instructions shall include, but not limited to, the following:
      (i) Recommendations for storage of materials.
      (ii) Minimum and maximum application temperatures.
      (iii) Instructions for material handling and mixing.
      (iv) Recommendations for environmental controls during application, safety, and spray equipment.
      (v) Requirements for surface preparation and surface conditions to receive the epoxy liner system.
      (vi) Recommendations for application of multiple coats including curing time between coats.
      (vii) Procedures to repair pinholes, blisters, evidence of uneven coverage, poor bonding, or other types of repairs.
6. Test Data: Provide test data verifying the properties of the epoxy liner system where called for in the specifications. Data is to include, but is not limited to, the following:
   (a) Adhesion strength.
   (b) Hardness, Shore D.
   (c) Compressive strength.
   (d) Flexural strength.
   (e) Tensile strength.
7. Results of all quality control tests performed on the shipments of the epoxy products provided.

D. Samples:
   1. Not a required submittal.

E. Testing:
   1. Product testing in conformance with paragraph CEMENTIOUS MANHOLE LINING.

F. Other Submittals:
   1. Qualifications:
      (a) Submit resumes for each worker as required by paragraph QUALITY ASSURANCE. Include years of experience and verification of OSHA 10-hour training.
      (b) Provide cementitious liner manufacturer's certification for Applicators as required by paragraph QUALITY ASSURANCE.
      (c) As applicable, provide antimicrobial admixture manufacturer's certification for Applicators as required by paragraph QUALITY ASSURANCE.
      (d) References: Submit Contractor's references in accordance with paragraph QUALITY ASSURANCE.
   2. Submit Work Plan in accordance with paragraph WORK PLAN.
   3. Results of all quality control tests performed on samples taken during application.
   4. Contractor shall submit manhole acceptance testing reports prior to final payment.

5. Manufacturer's warranty on the liner system(s) provided.

1.07 QUALITY ASSURANCE

A. The Contractor is responsible for the quality assurance and quality control of the Work.

B. Qualifications for reinforced structural cementitious liner installation:

1. Manufacturer: Company specializing in manufacturing the products specified in this section shall have a minimum of ten (10) years of experience manufacturing the products provided and providing training for their Applicators.
2. Applicators:
   (a) Submit certification from manufacturer of the cementitious liner system that the Applicator has been trained and approved in the handling, mixing and application of the products to be used.
   (b) As applicable, submit certification from manufacturer of the antimicrobial admixture that the Applicator has been trained and approved in the handling, mixing and application of the products to be used.
   (c) Each Applicator shall have a minimum of three (3) years of experience applying the liner materials that will be installed as part of the Work. Submit resumes for each Applicator showing experience with installation of the proposed products including Manufacturer's training requirements and certifications.
3. Contractor shall provide the City three (3) references within the past three (3) years from the bid date for successful projects of similar size and difficulty for the exact cementitious products to be used by the Applicator. In lieu of references, an authorized manufacturer representative shall be onsite until they are satisfied with the performance of the Applicator.
4. Equipment: Submit manufacturer's certification approving the equipment to be used for applying the material(s) used on this contract.

C. Qualifications for epoxy lining installation:

1. Manufacturer: Company specializing in manufacturing the products specified in this section shall have a minimum of ten (10) years of experience manufacturing the products provided and providing training for their Applicators.
2. Applicators:
   (a) Submit certification from the manufacturer of the epoxy lining system that the Applicator has been trained and approved in the handling, mixing and application of the products to be used.
   (b) As applicable, submit certification from manufacturer of the antimicrobial admixture that the Applicator has been trained and approved in the handling, mixing and application of the products to be used.
   (c) Each Applicator shall have a minimum of three (3) years of experience applying the liner materials that will be installed as part of the Work. Submit resumes for each Applicator showing experience with installation of the proposed products including Manufacturer's training requirements and certifications.
3. Contractor shall provide the City three (3) references within the past three (3) years from the bid date for successful projects of similar size and difficulty for the exact cementitious products to be used by the Applicator. In lieu of references, an authorized manufacturer representative shall be onsite until they are satisfied with the performance of the Applicator.

4. Equipment: Submit manufacturer's certification approving the equipment to be used for applying the material(s) used on this contract. The equipment and materials to be utilized for the epoxy lining system shall be designed and manufactured to withstand the severe effects of hydrogen sulfide in a wastewater environment. Manufacturer of corrosion protection products shall have long proven experience in the production of the lining products utilized and shall have a satisfactory installation record.

D. All aspects of the installation of the liner system shall be in accordance with this specification and with the manufacturer's written information including specifications, technical data sheets and installation manual. If a discrepancy occurs between the manufacturer's recommendation and this specification, the City shall determine the appropriate action.

1.08 WORK PLAN

A. Contractor shall submit a Work Plan for approval by the City at least 30 days prior to the start of rehabilitation work.

B. Following approval by the City, Contractor shall review the Work Plan with the City's resident representative prior to starting work.

C. As a minimum, the following items shall be addressed in the work plan:

1. Written description of construction procedures, including equipment layout plan, order of work, flow diversion plan (if needed), and traffic control.
2. Detailed construction schedule for preparation, application and testing in accordance with Section 01320 – Construction Progress Documentation.
3. For use of private property beyond the limits of the Site, the Contractor shall conform to Section 01000 – General Project Requirements, paragraph EASEMENTS AND RIGHTS-OF-WAY.
4. Joint certificate of "Compliance with Specifications" between the manufacturer and applicator for the manhole rehabilitation material and installation.
5. Traffic Control plan in accordance with Section 01700 – Traffic Control.
6. Quality assurance requirements specified in paragraph QUALITY ASSURANCE.

1.09 PRODUCT DELIVERY, STORAGE AND HANDLING

A. Store all materials per the manufacturer's recommendations to prevent contamination and deterioration. See also Section 01000 – General Project Requirements.

B. Store all materials in a manner that will permit easy access for inspection and identification of each shipment.

1.10 WARRANTY

A. The cementitious manufacturer(s) and the epoxy liner system manufacturer(s) shall provide a five (5) year warranty against material defects and other defects that affect the structural integrity of the applied product including but not limited to infiltration and inflow, cracks, fractures, delamination, deterioration and any other defect affecting the performance of the product. Manufacturer's warranty shall be submitted in accordance with paragraph SUBMITTALS.

B. During the correction period, Contractor shall repair any defects that affect the water tightness or strength of the applied materials. Repairs shall be made at no additional cost to the City.

PART 2 - PRODUCTS

2.01 PATCHING MATERIAL

A. Patching material shall be compatible with cementitious liner materials.
B. Patching material shall be a quick setting cementitious material meeting the following minimum requirements:

Table 1. Patching Materials

Characteristic	Minimum Requirement	Specification
Compressive Strength	>1,500 psi at 1 hour >4,500 psi at 24 hours >7,000 psi at 28 days	ASTM C109
Bond	> 1600 psi, 28 days	ASTM C882
Shrinkage	0% at 90% Relative Humidity	ASTM C596
Placement Time	Up to 15 minutes	
Set Time	15 to 30 minutes	

C. Mix and apply according to the manufacturer's recommendations.
D. Manufacturer shall provide documentation that the product will adhere to the substrate.
E. Allowable Product Manufacturers:
   1. Permacast® Patch 20 by AP/M Permaform Products of Johnson, Iowa.
   2. Strong-Shield QSR Plus be The Strong Company, Inc. Pine Bluff, Arkansas.
   3. City approved equal.

2.02 INFILTRATION CONTROL MATERIAL

A. Provide a material specifically designed for fast setting to seal active leaks in preparation for lining of manholes.
B. Cementitious Lining Products:
   1. A rapid setting cementitious product, specifically formulated for leak control, shall be used to stop minor water infiltration. The material shall be mixed and applied according to the manufacturer's recommendations.
   2. Infiltration control material shall meet the following minimum requirements:

Table 2. Infiltration Control Materials

Characteristic	Specification	Minimum Requirement
Compressive Strength at 1 hour	ASTM C109	1,000 psi
Compressive Strength at 24 hours	ASTM C109	2,000 psi
Set Time		< 1 minute

   3. Allowable Manufacturers:
      (a) Strong-Plug® by Strong Company, Inc., Pine Bluff, Arkansas.
      (b) Permacast® Quick Plug by AP/M Permaform Products of Johnson, Iowa.
      (c) Quadex Quad-Plug as manufactured by Quadex, Inc.

(d) City approved equal.

C. Chemical Grout:
   1. Grout for this purpose shall have a minimum 28-day compressive strength of 250 psi.
   2. Mix and apply per manufacturer's recommendations.
   3. Allowable Manufacturers:
      (a) Avanti International, Houston, Texas.
      (b) De Neef, Cambridge, Massachusetts.
      (c) City approved equal. .

2.03 CEMENTITIOUS LINER

A. A cementitious product shall be used to form a structural monolithic liner covering all interior surfaces.

B. The cementitious liner material shall have the following minimum requirements:

Table 3. Cementitious Liner Materials

Characteristic	Specification	Minimum Requirement
Compressive Strength at 28 days	ASTM C109	8,000 psi
Tensile Strength	ASTM C496	800 psi
Flexural Strength	ASTM C293	1,000 psi
Bond Strength	ASTM C882	2,000 psi
Shrinkage @ 90% R.H.	ASTM C596	0%

C. Materials shall be as manufactured by the following:
   1. Strong-Seal MS-2C by Strong Company, Inc. Pine Bluff, Arkansas
   2. Permacast CR-9000 by Permacast Products, Johnson, Iowa
   3. Permaform MS-1000 by Permacast Products, Johnson, Iowa
   4. City approved equal.

2.04 ANTIMICROBIAL ADDITIVE

A. Acceptable manufacturers include the following:
   1. ConShield HD® as manufactured by APM LLC.
   2. As specified in Section 01015 – Specific Project Requirements.
   3. City approved equal.

B. Admixture Identifier: ConTint as certified by APM LLC. The color tinting shall be included to verify the concrete contains the antimicrobial admixture. The identifier shall be brown in color, or as otherwise approved by the City.

2.05 EPOXY TOPCOAT

A. Epoxy topcoat shall conform to this Section.

2.06 EPOXY LINER SYSTEMS

A. Shall be a monolithic, 100% solids, solvent-free epoxy or polyurethane lining with exceptionally high physical strengths and a broad range of chemical resistance.

B. Shall be specifically designed for applications onto properly prepared concrete surfaces.

C. Resin system shall be 100% solid based free of volatile organic compounds (VOC).
   1. Coating on horizontal and vertical surfaces shall be an integral part of the new or rehabilitated sewer manhole.
   2. The final coating shall be a monolithic lining with uniform thickness, covering the entire interior of the manhole being rehabilitated, including but not limited to channel invert, bench, barrel, walls, cone section, and chimney.
   3. The product must be capable of providing a structural liner application in excess of 250 mils in one coating application.
   4. Epoxy liner system shall meet the following minimum requirements:

Table 1. Epoxy Liner Requirements

Characteristic	Minimum Requirement	Specification
Adhesive Strength	Substrate Failure	ASTM D4541
Hardness, Shore D	≥ 80	ASTM D2240
Compressive Strength	>10,000 psi	ASTM D695
Flexural Strength	>9,000 psi	ASTM D790
Tensile Strength	>6,000 psi	ASTM D638

   5. Mixing and Handling: All two component epoxies should be spray applied using a plural component application system capable of spraying at distances in excess of 300 feet from the spray rig, and at application temperatures per manufacturer's recommendations.

D. Allowable Lining product manufacturers includes the following:
   1. SprayWall® by SprayRoq Protective Lining Systems.
   2. Raven 405 as manufactured by Raven Lining Systems.
   3. Warren S301 as manufactured by Warren Environmental, Inc.
   4. Cor+Gard 301 as manufactured by Permaform.
   5. City-approved equal.

2.07 WATER

A. All water used to mix products shall be potable.

2.08 PIPE END SEAL

A. Pipe End Seals shall conform to the requirements of Section 06010 – Cured-in-Place-Pipe (CIPP), CIPP Point Repairs and End Seals.

2.09 OTHER MATERIALS

A. No other material shall be used with the mixes described above without City pre-approval.

2.10 MANHOLE FRAME AND COVER CASTINGS

A. As specified in Section 05010 – Sanitary Sewer Manhole Castings.

PART 3 - EXECUTION

3.01 WEATHER LIMITATIONS

A. Materials shall be applied in accordance with the Manufacturer's recommendations and as specified below.

B. No application of material shall be made while ambient temperature is below 40 degrees F, to frozen surfaces, or if freezing temperatures are expected to occur within twenty-four (24) hours after application.

3.02 MANHOLE PREPARARATION

A. Diversion of Flow:
   1. Flow through the manhole shall be blocked and bypassed as necessary.
   2. Provide all labor, equipment and materials to plug, divert, or bypass the flow from laterals and pipes entering the manhole. Adequately sized pumps shall be provided and used by the Contractor, as needed.

B. Manhole Cleaning:
   1. Place covers over invert channels to prevent material from entering the sanitary sewer. Wire mesh and fabric filters may be used to allow water to pass while preventing solid material from entering the sewer system.
   2. The floor and interior walls of the structure shall be thoroughly cleaned and made free of all foreign materials including dirt, grit, roots, grease, sludge and all debris or material that may be attached to the wall or bottom of the manhole. Cleaning shall result in a clean, sound surface that displays the concrete surface profile (CSP) recommended by the coating material manufacturer.
   3. High pressure water blasting with a minimum of 3500 psi shall be used to clean free all foreign material within the structure.
   4. When grease or oil are present within the structure, an approved detergent or muriatic acid shall be used integrally with the high-pressure cleaning water.
   5. Other means besides water blasting may be needed to obtain the appropriate concrete surface profile (CSP) such as sand blasting or abrasive blasting.
   6. Remove all loose and protruding mortar, brick, and concrete. Do not allow loose material to enter the sewer system.
   7. All manhole steps shall be removed flush with the wall and the wall repaired prior to lining.

C. Seal Active Leaks:
   1. All discernible voids behind the manhole wall shall be filled patching material or cementitious liner (based upon manufacturer's recommendations).
   2. Active leaks shall be stopped using infiltration control material in accordance with the manufacturer's recommendations.
   3. Some leaks may require weep holes to localize the infiltration during the application.
   4. After application, the weep holes shall be plugged with infiltration control material prior to applying the cementitious liner.
   5. If necessary, drilling may be required to pressure grout using a chemical grout.
   6. If fast setting concrete is used, leaks must be stopped for 12 hours before the liner can be installed.

D. Casting Adjustments:
   1. Manhole castings that are shifted from their original position or are not flush with pavement shall be adjusted to pavement elevation in accordance with Section 05010 – Sanitary Sewer Manhole Castings.

2. Center the manhole frame and cover over the manhole opening.
3. Adjust the frame and cover top elevation to be set ½-inch to ¾-inch below the adjacent street grade using adjustment rings in accordance with Section 03370 – Sanitary Sewer Manhole Construction.
4. Perform pavement removal and replacement in accordance with Sections 02575 – Surface Restoration and 03370 – Sanitary Sewer Manhole Construction.

E. Channel and Bench Repair:
1. At locations indicated on the Drawings, the manhole shall have the existing bench and channel rebuilt as specified herein.
2. Thoroughly clean the bench and invert surface by pressure washing. Loose bricks and mortar, unsound concrete, grease, roots, mud and debris shall be completely removed to a depth necessary to expose a sound substrate to allow for proper forming, shaping and finishing of the bench and invert.
3. Actively leaking areas shall be plugged.
4. Voids and cracks shall be patched.
5. Apply the patching material to the channel. The material shall be troweled uniformly onto the invert at a minimum half (½) inch thickness at the invert extending out onto the bench of the manhole sufficiently to tie into the structural monolithic liner. The cementitious patch material shall not be allowed to enter any pipes.
6. Reshape and repair all inverts to provide smooth, uniform flow characteristics through the structure. Benches and inverts shall be shaped and finished smooth and free of ridges so that the manholes will be self-cleaning and free of areas where solids may be deposited as sewage flows through the manhole from all in-flowing pipes to the out-flowing pipes.
7. The flow through the manhole may be re-established 30 minutes after the patch material sets, or as recommended by the patching material manufacturer, whichever is longer.

F. Manhole liners shall not be installed until sealing/replacement of manhole frame, grade adjustments, bench buildup, partial manhole replacement, manhole grouting, CIPP installation, and/or all sewer replacement/repairs are complete.

3.03 INSPECTION OF SURFACE PREPARATION

A. Contractor shall inspect all surfaces specified to receive a protective coating upon completion of surface preparation. Contractor shall notify the City of any noticeable disparity in the surfaces which may interfere with the proper preparation or application of the protective coating.

B. Provide a coating environment as recommended by the manufacturer of corrosion protection material including drying or wetting the structure surfaces to be coated and providing optimal temperature and moisture conditions in the structure.

C. The City reserves the right to inspect the surface preparation prior to application of the cementitious liner. When the final preparation is complete, the Contractor shall notify the City that the manhole is ready for the application of the liner material. Application of the liner material shall not be conducted until direction is provided by the City.

D. Application of liner shall commence within a time frame as recommended by the manufacturer.

3.04 MANHOLE LINING TYPE

A. The type of liner to be used for each rehabilitated manhole shall be as noted on the Drawings. Liner types associated with manhole rehabilitation include the following:
   1. Type 1 (see Figure 1):
      (a) Manhole Preparation.
      (b) Cementitious Liner.
   2. Type 2 (see Figure 2):
      (a) Manhole Preparation.
      (b) Cementitious Liner.
      (c) Antimicrobial Admixture.
   3. Type 3 (see Figure 3):
      (a) Manhole Preparation.
      (b) Cementitious Liner.
      (c) Epoxy Top Coat.

3.05 ANTIMICROBIAL ADMIXTURE

A. Where corrosive environments are indicated, antimicrobial additive shall be incorporated, in accordance with manufacturer's recommendations, into the mix of cementitious materials installed on the interior of the manhole.

3.06 CEMENTITIOUS LINER

A. The manhole surface shall be totally saturated with water just prior to application of the cementitious material, as recommended by the manufacturer.
B. Application equipment shall be as recommended by materials manufacturer.
C. Mixing:
   1. Mixing shall be done in accordance with the material manufacturer's recommendations.
   2. Addition of water, antimicrobial additive (as required), and color tinting (as required) shall be in accordance with the manufacturer's recommendations.
   3. As required, addition of antimicrobial additive and color tinting shall be performed in the presence of the City's representative.
   4. Re-mixing or tempering shall not be permitted. Rebound material shall not be re-used.
   5. The mixer shall be cleaned to remove all adherent materials from the mixing valves and from the drum at regular intervals as recommended by the manufacturer.
   6. Mix temperature at the time of application shall be below 90 degrees F.
   7. Mix water temperature shall be between 40 degrees F and 85 degrees F.
D. Spraying:
   1. Protect all connecting pipes from overspray by blocking each pipe entrance.
   2. Materials shall be applied a minimum of one (1) inch thick from the bottom of the frame or polymer grade rings. Contractor shall take at least one thickness measurement at the chimney, corbel, wall, bench and channel in the presence of the City's representative. Multiple measurements in each area may be required.
   3. Troweling shall be performed to compact the material into voids. A brush finish may be applied to the trowel finish surface.
   4. Bench application: The cementitious material shall be applied to the bench in such a manner that a gradual slope is produced from the walls to the channel with a minimum thickness of (1) inch covering the entire bench to the edge of the

channel. The wall/bench intersection shall be rounded to a uniform radius the full circumference of the intersection.

5. Surface Defect Repair: Continual inspection during the coating application shall be maintained. Any imperfections shall be removed and replaced with sound material.

E. Curing:

1. Place cover on manhole within 15 minutes of finishing the application and keep in place for a period complying with manufacturer recommendations. The liner material shall have a minimum of four (4) hours cure time before being subjected to active flow.

3.07 EPOXY TOP COAT

A. Where indicated, epoxy top coat shall be applied as specified in this Section.

3.08 EPOXY LINER APPLICATION

A. Epoxy liner shall not be installed until the cementitious liner specified in this Section has cured in accordance with the manufacturer's requirements.

B. Application procedures shall conform to the recommendations of the manufacturer, including material handling, mixing, environmental controls during application, safety, and spray equipment. Contractor shall submit manufacturer's installation procedures in accordance with paragraph SUBMITTALS.

C. The surface to receive the epoxy liner system shall be prepared in accordance with the Manufacturer's recommendations.

D. The spray equipment shall be specifically designed to accurately ratio and apply the specified protective coating materials, shall be regularly maintained, in proper working order, and shall be approved by the manufacturer of the epoxy liner system.

E. The epoxy liner system shall be applied by the Applicator.

F. Re-mixing or tempering shall not be permitted. Rebound materials shall not be reused.

G. Specified surfaces shall be coated by spray application of a solventless, 100% solids, self-priming epoxy or polyurethane protective coating as called for in Section 2.

H. Epoxy Liner System Thickness:

1. The thickness of the epoxy liner system shall be as indicated on the Drawings or as specified in Section 01015 – Specific Project Requirements.
2. Minimum liner thickness: 125 mils
3. Liner shall be uniform throughout.
4. Liner thickness shall be regularly checked using a wet film gauge to ensure that the minimum thickness is being maintained.

I. Spray application equipment approved by the coating manufacturer shall be used to apply each coat of the protective coating.

J. If necessary, subsequent top-coating or additional coats of the epoxy liner system shall be done in accordance with the Manufacturer's recommendations.

K. The interior liner shall be applied to the manhole interior from the top of the manhole chimney to the bench/trough, including the bench/trough.

1. Bench and trough shall be sprayed in such a manner as to blend with wall liner.
2. Do not apply to epoxy liner system to metal castings. Casting shall be appropriately masked.

L. The minimum curing time between coatings shall be in accordance with the Manufacturer's recommendations.

M. The final application shall have a minimum of three (3) hours cure time before being subjected to active flow or as recommended by the manufacturer.

3.09 PROTECTION OF ADJACENT SURFACES

A. During progress of the work, where appearance is important, adjacent areas or grounds which may be permanently discolored, stained or otherwise damaged by dust and rebound, shall be adequately protected.
B. When directed by the City or as necessary, surfaces shall be cleaned by early scraping, brushing or washing as the surroundings permit.

3.10 INSPECTION AND TESTING

A. Cementitious Liner:
   1. Four (4) two-inch cube specimens shall be cast and properly packaged, labeled, and submitted by the Contractor for compression strength testing per ASTM C109.
   2. Testing shall be conducted by an independent testing laboratory at no additional cost to the City.
   3. At a minimum, testing shall be conducted based in the following frequencies:
      (a) Test specimens shall be prepared daily during the first week of work.
      (b) Test specimens shall be prepared each day the Contractor begins using a newly delivered batch of product.
      (c) Test specimens shall be prepared each day a new person mixes the material.
      (d) Test specimens shall be prepared each day the inspector deems necessary.
   4. Submit test results to the City's representative.
B. Visual Inspection:
   1. A visual inspection shall be made by the City.
   2. Any deficiencies in the liner system shall be marked and repaired according to the procedures set forth by manufacturer.
C. Epoxy Liner Discontinuity (Holiday) Testing:
   1. After the epoxy liner system has set hard to the touch, it shall be inspected with high-voltage holiday detection equipment. An induced holiday shall be made on to the coated concrete surface and shall serve to determine the minimum / maximum voltage to be used to test the coating for holidays at the particular area.
   2. The spark tester shall be initially set at 100 volts per 1 mil of film thickness applied but may be adjusted as necessary to detect in induced holiday.
   3. All detected holidays shall be marked and repaired by abrading the coating surface with grit disc paper or other hand tooling method.
   4. After abrading and cleaning, additional epoxy liner material can be applied to the repair area.
   5. All touch-up/repair procedures shall follow the protective coating manufacturer's recommendation.
D. Bond Strength Testing:
   1. The City reserves the right to perform measurements of the bond strength of the cementitious liner and the epoxy liner system to the substrate (structure or cementitious liner).
   2. Bond strength may be measured in accordance with ASTM D4541.
   3. Any measurements detected to have inadequate bond strength shall be evaluated by the City. Further bond tests may be performed in that area to determine the extent of potentially deficient bonded area and repairs shall be made by Applicator in strict accordance with manufacturer recommendations.

4. Contractor shall repair all holes or other defects occurring as required to perform the bond strength testing. Repairs shall be made at no additional cost to the City. Repairs should be made with manhole lining system manufacturer recommended products and procedures.

E. Vacuum Testing:
1. Vacuum testing shall be conducted in accordance with Section 02702 – Testing Requirements for Sanitary Sewer: Mains and Manholes.
2. The City shall identify which manholes are to be vacuum tested. Designation of manholes will be done after the cementitious liner has been installed.
3. All manholes designated by the City to be vacuum tested shall have pipe end seals installed.
4. End seals shall be installed on any connecting pipe that has not been rehabilitated with CIPP.
5. End seals shall be installed after the cementitious liner in accordance with Section 06010 – Cured-In-Place Pipe (CIPP), CIPP Point Repairs and End Seals.
6. A minimum of ½ inch of cementitious lining material shall be placed over each end seal's 2-inch wall overlap to ensure a seal between the end seal and the lining.
7. Contractor shall perform initial vacuum testing on 20% (identified by the City) of the rehabilitated manholes (rounded up) with main line diameters of 15 inches or less. Contractor shall correct any deficiencies found and perform retesting. However, if liner deficiencies are found in more than 10% of the tested manholes, the Contractor shall test an additional 20% of the rehabilitated manholes, identified by the City, correct any deficiencies found, and perform retesting. If deficiencies in the cementitious liner are found in more than 10% of the second 20% of tested manholes, the contractor shall test all rehabilitated manholes, correct any deficiencies found and perform retesting, all at no additional cost to the City.

3.11 FLOW RESTORATION

A. The flow may be reestablished in the manhole when the repair material has properly cured so that the flow does not wash away the applied material.

3.12 QUALITY

A. The finished manhole surface shall be free of blisters, runs, sags, inconsistencies, voids, and other defects. Any defects which will affect the integrity or strength, of the manhole shall be repaired at the Contractor's expense, in a manner acceptable to the City.

3.13 CLEANUP

A. After installation and testing, the Contractor shall clean up the Site in accordance with Section 01566 – Cleanup Operations.

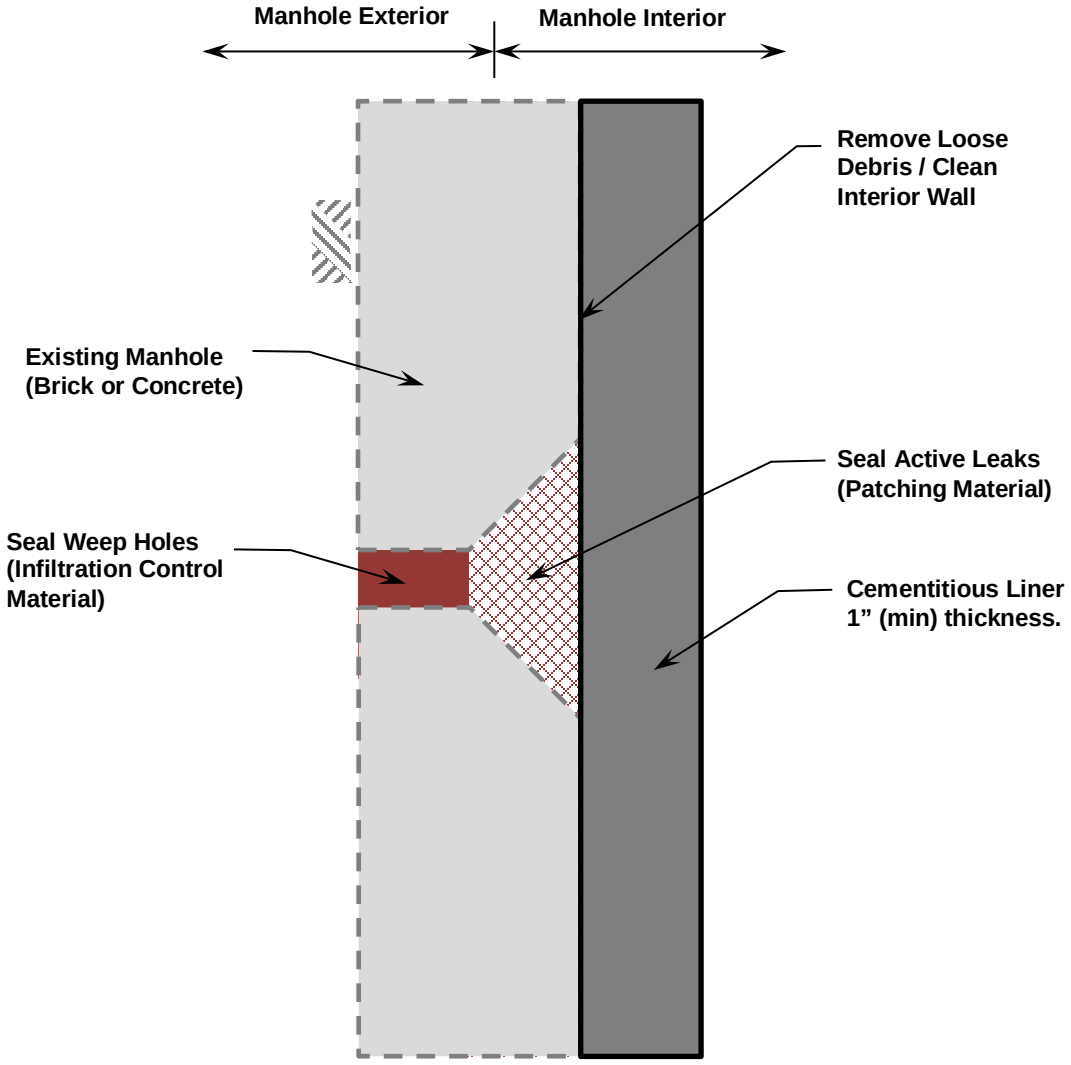

Figure 1 – Type 1 Liner / Cementitious Liner
(Non-corrosive environment)

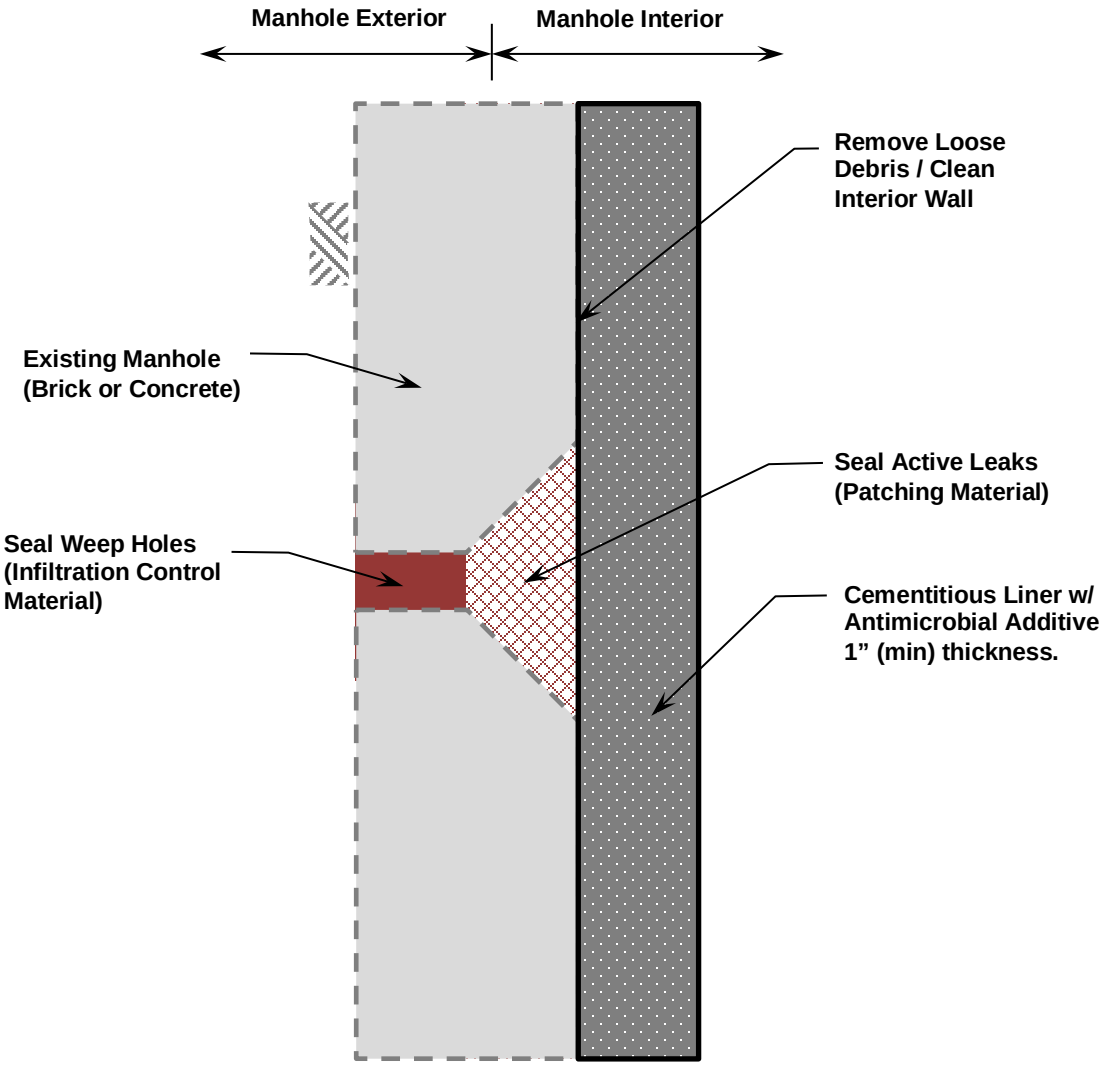

Figure 2 – Type 2 Liner / Cementitious Liner with Antimicrobial Additive
(Corrosive environment)

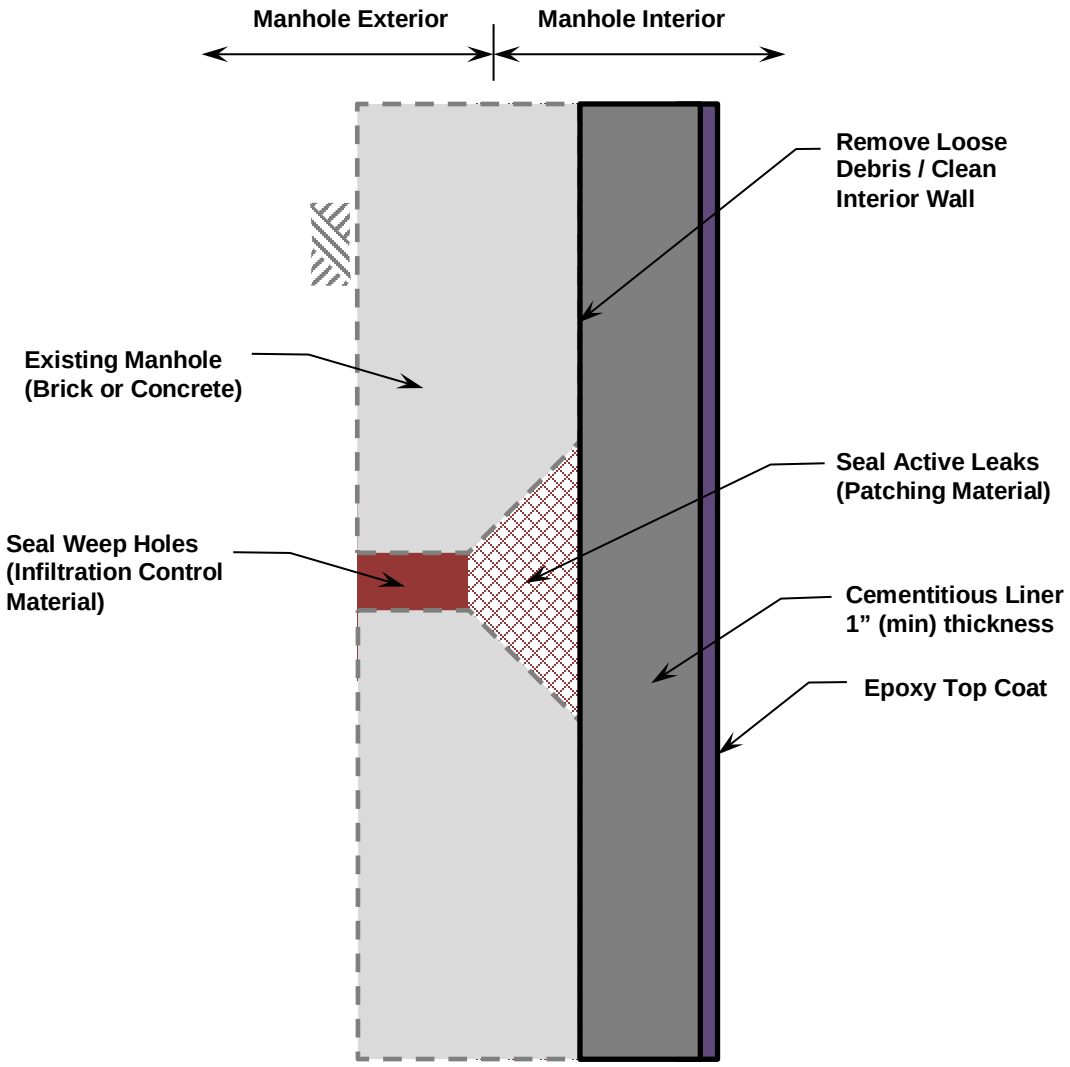

Figure 3 – Type 3 Liner / Cementitious Liner with Epoxy Top Coat
(Corrosive environments)

END OF SECTION

SECTION 03370 – SANITARY SEWER MANHOLE CONSTRUCTION

PART 1 - GENERAL

1.01 SUMMARY

A. This section covers the construction of standard sanitary sewer manholes. Standard manholes shall be constructed complete with frame and cover, anchors, waterproofing, seals, barriers, joint sealant, fittings and all other specified requirements in accordance with the Contract Documents.

1.02 SPECIFICATION MODIFICATIONS

A. It is understood that throughout this section, these Specifications may be modified by appropriate items in Section 01015 – Specific Project Requirements or as otherwise indicated on the Contract Drawings.

1.03 RELATED SECTIONS

A. Section 01015 – Specific Project Requirements.
B. Section 01300 – Submittals.
C. Section 02200 – Earthwork.
D. Section 02250 – Trenching, Pipe Embedment and Backfill.
E. Section 02702 – Sewer Pipe and Manhole Testing.
F. Section 03000 – Miscellaneous Concrete.
G. Section 05010 – Sanitary Sewer Manhole Castings.

1.04 CODES AND STANDARDS

A. The publications listed below form a part of this specification to the extent referenced. The publications are referred to within the text by the basic designation only.
B. American Society for Testing and Materials (ASTM):

ASTM A185	Standard Specification for Steel Welded Wire Reinforcement, Plain, for Concrete.
ASTM A536	Standard Specification for Ductile Iron Castings.
ASTM A615	Standard Specification for Deformed and Plain Carbon-Steel Bars for Concrete Reinforcement.
ASTM C76	Standard Specification for Reinforced Concrete Culvert, Storm Drain and Sewer Pipe.
ASTM C109	Standard Test Method for Compressive Strength of Hydraulic Cement Mortars (Using 2-in. or [50-mm] Cube Specimens).
ASTM C191	Standard Test Methods for Time of Setting of Hydraulic Cement by Vicat Needle.
ASTM C443	Standard Specification for Joints for Circular Pipe and Manholes, Using Rubber Gaskets.
ASTM C478	Standard Specification for Circular Precast Reinforced Concrete Manhole Sections.
ASTM C827	Standard Test Method for Change in Height at Early Ages of Cylindrical Specimens of Cementitious Mixtures.
ASTM C923	Standard Specification for Resilient Connectors between Reinforced Concrete Manhole Structures, Pipes and Laterals.
ASTM C990	Standard Specification for Joints for Concrete Pipe, Manholes and Precast Box Sections Using Preformed Flexible Joint Sealants.

ASTM C1107	Standard Specification for Packaged Dry, Hydraulic-Cement Grout (Non-shrink).
ASTM D4976	Standard Specification for Polyethylene Plastics Molding and Extrusion Materials.

1.05 DEFINITIONS

A. Paved Areas – Areas for which the final surfacing will be street pavement, shoulders, driveways, parking lots, sidewalks, gravel roads or other surface features.
B. Unpaved Areas – Areas for which the final surfacing is a green space.

1.06 INFORMATION PROVIDED BY THE CITY

A. As provided in the Contract Documents.

1.07 SUBMITTALS

A. Submit as specified in Section 01300 – Submittals.
B. Shop Drawings:
   1. Submit for approval general arrangement drawings showing manhole size, height and location of access cover, steps and all pipe penetrations.
   2. Submit for approval joint construction details.
   3. Submit for approval details on reinforcement if requested.
C. Product Data:
   1. Submit for review and approval manufacturer's catalogue/product data and installation instructions for the following:
      (a) Manhole adjustment rings.
      (b) Resilient connectors.
      (c) Joint sealant.
      (d) External joint seal.
      (e) Internal joint seal.
      (f) External frame chimney seal.
      (g) Grade ring liner.
      (h) Non-shrink grout.
      (i) Antimicrobial additive.
      (j) Waterproofing additive.
      (k) Color tinting additive.
D. Certificates:
   1. Certification from precast manufacturer that the precast structures were fabricated to include the specified antimicrobial additive, admixture identifier and waterproofing additives.
E. Other:
   1. Precast concrete mix design.
   2. Compressive strength testing of cylinders.
   3. Compressive strength testing of cores.

1.08 QUALITY ASSURANCE

A. The Contractor is responsible for the quality assurance and quality control of the Work.
B. The installation contractor shall be a licensed underground utility contractor licensed for such work in the state of Missouri. The installing contractor's license shall be current and be state certified/state registered.

C. Manufacturers of all precast concrete structures must be a KCMO "Approved Precast Concrete Product Supplier" as approved as part of the Public Works Quality Management Plan.

1.09 PRODUCT DELIVERY, STORAGE AND HANDLING

A. Cement, Aggregate and Reinforcement shall be in accordance with Section 03000 – Miscellaneous Concrete and as specified herein.
B. Handle materials and other accessories in such manner as to ensure delivery to the trench in a sound undamaged condition. Take special care not to damage linings. If the lining is damaged, the Contractor shall make satisfactory repairs.
C. Non-shrink grout – Deliver materials to project in Manufacturer's original, unopened packaging, with labels clearly identifying product name, manufacturer and expiration date. Store grout in a cool, dry place, out of the sun.
D. Precast concrete sections shall not be delivered to the job until the concrete control cylinders have attained a strength of at least 80 percent of the specified minimum.
E. Precast concrete sections shall be handled carefully and shall not be bumped or dropped. Hooks shall not be permitted to come in contact with joint sections.
F. Precast concrete sections shall be inspected when delivered. All cracked and visibly defective units shall be rejected. City/Design Professional reserves the right to inspect the production of the units at the manufacturing plant.

1.10 MANHOLE TYPES

A. Unless otherwise noted on the Drawings or in Section 01015 – Specific Project Requirements, all manhole types shall conform to the following:
   1. Standard Precast Manhole – Eccentric Cone: Use for all newly constructed manholes having a depth (measured from top of casting to top of base) of more than 6 feet. See Standard Drawing 03370-1.
   2. Standard Precast Manhole – Shallow Type: Use for all newly constructed manholes having a depth (measured from top of casting to top of base) of less than or equal to than 6 feet. See Standard Drawing 03370-2.

PART 2 - PRODUCTS

2.01 PRECAST CONCRETE

A. Materials and Fabrication:
   1. Precast concrete shall conform to ASTM C478.
   2. Air entraining agents shall be added to the concrete to provide 4 to 6 percent entrained air.
   3. Submit for review and approval the precast concrete manufacture's mix design(s) for precast structures.

B. Quality Control:
   1. Compressive Testing of Cylinders – Conduct in accordance with ASTM C478. Provide compressive testing results as requested by the City/Design Professional or as required by Section 01015 – Specific Project Requirements.
   2. Compression Testing of Cores – Conduct in accordance with ASTM C478 and submit results as requested by the City/Design Professional and as required by Section 01015 – Specific Project Requirements.

2.02 MANHOLES

A. The minimum inside diameter of the manhole shall be as follows:

Table 1. Minimum Manhole Diameter

Sewer Pipe Size (inches)	**Manhole Inside Diameter** (inches)	**Min. Manhole Frame Clear Opening** (inches)
Up to 36” (inch)	60”	30”
42”(inch) through 48”(inch)	72” See Standard Drawing 03370-3	30”

B. Reducing sections may be used at six (6) feet or more above the invert.
C. Cone Sections shall be eccentric, unless otherwise specified by City/Design Professional.
D. All required pipe openings shall be plant cast, unless otherwise noted.
E. Pre-cast sections may be provided with lifting notches on the inside faces of the walls to facilitate handling. Lifting notches shall be not more than 3 inches deep. Holes extending through the wall will not be acceptable.
F. If precast base sections are provided with integral concrete invert fill, a roughened surface shall be provided to improve the bond with the final invert fill. A minimum of 2 inches of the concrete invert fill shall be installed in the field.

2.03 MANHOLE ADJUSTMENT RINGS

A. Adjusting rings shall be designed to withstand the wheel loading requirements of AASHTO HS25.
B. Adjusting rings shall be designed and fabricated to withstand deterioration and degradation when exposed to hydrogen sulfide.
C. Acceptable Manufacturers include:
   1. Cretex Pro Ring.
   2. East Jordan (EJ) Infrariser.

2.04 RESILIENT CONNECTORS

A. Manholes shall be provided with circular openings, with continuous, circular, resilient connectors cast into the wall.
B. Resilient connectors shall be installed in accordance with the manufacturer’s recommendations, except that connectors shall be positioned so that sealing or resealing operations may be accomplished from inside the manhole.
C. Resilient connectors shall conform to ASTM C923.
D. Mortar connections will be allowed only if prior approval has been given by the City/Design Professional.
E. Acceptable Products/Manufacturer’s include the following:
   1. The PSX: Direct Drive as manufactured by Press-Seal Corporation:
      (a) When the PSX: Direct Drive connector is used, it shall be double banded and the take-up screws for the gasket clamps shall be positioned 180 degrees apart.

2. The Quik-LOK Connector as manufactured by A-LOK Products Inc.:
   (a) When the Quik-LOK connector is used, it shall be double banded and the take-up screws for the gasket clamps shall be positioned 180 degrees apart.

2.05 JOINT SEALANT

A. Joints shall be sealed using preformed flexible joint sealants conforming to ASTM C990. The minimum bead dimension shall be one inch.
B. Install in accordance with manufacturer's recommendations.

2.06 EXTERNAL JOINT SEAL

A. External manhole seals shall be installed on new manhole installations, replacements or when project conditions allow for excavation of the manhole sections.
B. External joint seals shall be a minimum of 9 inches wide.
C. Heat Shrinkable Wrap-around Sleeves: Acceptable products include the following:
   1. CCI Pipeline Systems: WrapidSealTM.
D. External Joint Banding Systems:
   1. Infi-Shield®: External Gator Wrap.
   2. Mar Mac Construction Products, Inc.: MacWrap External Sealing Band.
   3. Cretex Specialty Products: Cretex Wrap.
E. Standard Precast Manhole – Shallow Type:
   1. Install an internal Cretex Seal or Infi-Shield Uni-Band External Seal where the chimney meets the flat top of manholes.
F. Materials for manhole seals shall be able to withstand hydrogen sulfide and other corrosive gases found in sewers.
G. Install in accordance with manufacturer's recommendations.

2.07 INTERNAL JOINT SEAL

A. Internal manhole seals shall be used when project conditions prevent the use of external manhole seals or at the direction of the City/Design Professional.
B. Acceptable products for internal manhole seal shall include the following:
   1. Cretex – Internal Joint Seal.
C. Materials for manhole seals shall be able to withstand hydrogen sulfide and other corrosive gases found in sewers.
D. Install in accordance with manufacturer's recommendations.

2.08 EXTERNAL FRAME CHIMNEY SEAL

A. Acceptable manufacturers for external frame chimney seal include the following:
   1. CCI Pipeline Systems – Wrapid Seal.
   2. Infi-Shield – Gator Wrap.
   3. Infi-Shield – Uniband.
B. Install in accordance with manufacturer's recommendations.

2.09 GRADE RING LINER

A. Grade ring liners shall be installed on all manholes in paved applications.
B. Acceptable manufacturers for grade ring liners include the following:
   1. WaterLOK Grade Ring Liners as manufactured by A-LOK Products, Inc.
   2. I&I Barriers as manufactured by Strike Tool Inc.
C. Install in accordance with manufacturer's recommendations.

2.10 FRAMES, COVERS AND GRATINGS FOR MANHOLES

A. Shall conform to Section 05010 – Sanitary Sewer Manhole Castings.

2.11 NON-SHRINK GROUT

A. Non-shrink grout shall conform to ASTM C1107, Grades B and C.
B. Non-shrink grout shall be a trowelable mix, in the plastic state and show no expansion after set (as tested per ASTM C827). Non-shrink grout shall develop a compressive strength not less than three thousand (3,000) psi within twenty-four (24) hours per ASTM C109. The placement time shall be not less than forty-five (45) minutes based on initial set per ASTM C191.
C. Non-shrink grout shall be ConShield Joint Set as manufactured by ConShield Technologies Inc. Mix and apply in accordance with the manufacturer's recommendations.

2.12 ANTIMICROBIAL ADDITIVE

A. Unless otherwise specified in Section 01015 – Specific Project Requirements, an antimicrobial additive shall be included in the following:
   1. Precast concrete sections.
   2. Miscellaneous concrete placed in the interior of the manhole.
   3. Non-shrink grout placed in the interior of the manhole.
   4. Precast concrete base.
   5. Concrete used for cast-in-place concrete base.
B. Acceptable manufacturers include the following:
   1. ConShield HD® as manufactured by ConShield Technologies Inc.
   2. As specified in Section 01015 – Specific Project Requirements.
C. Admixture Identifier – Color tinting shall be included to identify that the concrete contains the antimicrobial admixture. The identifier shall be CONTINT and shall be brown in color.

2.13 WATERPROOFING ADDITIVE

A. A waterproofing additive shall be included in the following:
   1. Precast concrete manholes and manhole bases.
   2. Non-shrink grout placed in the interior of a manhole
   3. Miscellaneous concrete placed in the interior of a manhole
   4. Concrete used for cast-in-place concrete base
B. Acceptable manufacturers include the following:
   1. Crystal-X as manufactured by ConShield Technologies.
   2. Xypex as manufactured by Xypex Chemical.
   3. As specified in Section 01015 – Specific Project Requirements.

2.14 GRANULAR BEDDING MATERIAL

A. Granular bedding material shall be as specified in Section 02250 – Trenching, Pipe Embedment and Backfill.

2.15 MISCELLANEOUS CONCRETE

A. Miscellaneous concrete shall conform to Section 03000 – Miscellaneous Concrete.

PART 3 - EXECUTION

3.01 EXCAVATION, BACKFILL AND COMPACTION

A. Excavation, backfill and compaction for manholes shall be in accordance with Section 02200 – Earthwork.
B. Excavation, backfill and compaction operation shall be achieved in a suitable and orderly manner providing a minimum disturbance to the general public.
C. Depth of excavation shall be to that required for proper installation of the manhole or structure. Over-depth excavation may be required if the subgrade is unsuitable or unstable. Over-depth excavation due to unsuitable or unstable subgrades shall be backfilled as required by the City/Design Professional. Over-depth excavation occurring through an oversight by the Contractor shall be backfilled as required by the City/Design Professional at no additional cost to the City.
D. Side clearance outside the manhole and/or structures shall be no greater than necessary to allow for forming, connection of piping, proper application of special coatings and access for inspection.

3.02 MANHOLE BASE

A. Precast Concrete Bases:
   1. The bottom precast wall section shall not be used for supporting or leveling the other wall sections prior to pouring the base.
   2. The subgrade materials shall be excavated to undisturbed earth and a uniform elevation to allow for a minimum of 4 inches of granular bedding material. The surface of the granular material shall be carefully graded and the base section accurately set so that connecting pipes will be on the proper line and grade. The elevation of the granular material shall be adjusted as required until proper grade and alignment of the base section has been attained.
   3. No wedging or blocking under precast concrete bases is permitted.
B. Cast-in-Place Concrete Bases:
   1. If a precast concrete base cannot be used, a poured concrete base may be used.
   2. The cast-in-place forming shall follow the design of the precast base as shown in Standard Drawing 03370-1 and as described herein.
   3. Cast-in-place concrete bases shall have a minimum thickness of eight (8) inches.
   4. Concrete shall be placed on undisturbed earth in accordance with requirements of Section 03000 – Miscellaneous Concrete.
   5. The bottom wall section shall be embedded in the base section a minimum of four (4) inches.
   6. Concrete blocks shall be used for supporting or leveling the bottom wall section prior to pouring the base. Use of Wood blocks will not be accepted.
   7. When resilient connectors are used with cast-in-place bases, granular bedding material shall be used instead of concrete fill under the connecting pipes. Granular bedding material shall be place on undisturbed earth.

3.03 MANHOLE INVERTS

A. In no case shall the invert section through a manhole be greater than that of the outgoing pipe.
B. The shape of the invert shall conform exactly to the lower half of the pipe it connects.
C. Side branches shall be connected with as large radius of curve as practicable.
D. All inverts shall be troweled to a smooth, even surface.
E. Inverts shall be constructed of be concrete as specified in Section 03000 –Miscellaneous Concrete.

F. Concrete shall be troweled (or formed if inverts are pre-cast) to produce a dense, smooth finish.
G. The invert channel shall be "U" shaped in cross section and shall extend upward as shown in Standard Drawing 03370-1.
H. Smooth transitions shall be formed for pipes of different sizes, elevation and bends.

3.04 RISER AND CONE SECTIONS

A. Circular precast sections shall be provided with a double bead of preformed flexible joint sealant as specified in paragraph JOINT SEALANT between precast sections.
B. All protruding flexible joint sealant shall be removed from inside of manhole and the joint shall be wiped with non-shrink grout - ConShield Joint Set (see paragraph 2.11).
C. Internal or external manhole joint seals shall be installed per manufacturer's recommendation.
D. Lifting notches in manhole walls shall be filled with non-shrink grout - ConShield Joint Set (see paragraph 2.11).

3.05 PIPE CONNECTIONS

A. Resilient Connectors:
   1. Resilient connectors shall be used for all pipe connections unless otherwise approved by the City.
   2. The connecting pipe shall be carefully adjusted to proper line and grade. Granular bedding material shall be compacted under the haunches and to the spring line of the pipe for a distance of at least 6 feet from the manhole wall and to the trench width.
   3. The pipe shall be installed in the resilient connector prior to backfilling outside the manhole and shall be resealed as required after completion of the manhole and backfill. All visible leakage shall be eliminated.
   4. The connecting pipe for installation with resilient connectors shall be plain end, square cut spigots and shall not protrude more than one inch inside the manhole wall.
   5. A clear distance of at least 1 inch from the end of each connecting pipe and around the pipe shall be provided when the concrete invert fill is installed or as recommended by the manufacturer of the resilient connector.
   6. After completion of the manhole installation, the box out shall be filled with mastic filler material, completely filling the space beneath the pipe and extending to at least the spring line. The filler material shall provide a smooth, uniform surface between the inside diameter of the pipe and manhole invert.
B. Grouted Connections:
   1. Grouted connections are not allowed unless approved by the City.
   2. The space between connecting piping and the wall of the precast sections shall be completely filled with non-shrink grout.
   3. The maximum allowable pipe opening on a horizontal axis shall be the outside diameter of the pipe plus twelve (12) inches.
   4. The maximum allowable pipe opening on a vertical axis shall be the outside diameter plus 8 inches.
   5. The minimum clearance between the outside surface of the installed pipe and the concrete of the manhole shall be two (2) inches.
   6. The minimum distance between any two adjacent pipes shall be twelve (12) inches.
   7. For field alterations approved by the City/Design Professional, the walls shall be scored with a masonry saw to a depth sufficient to sever the reinforcing steel. A chipping hammer may then be used to remove the concrete.

3.06 MANHOLE TOP

A. The finished top elevation of manhole castings shall conform to the following unless otherwise shown on the Drawings or directed by the City/Design Professional.
   1. In paved areas, the top of the casting shall conform to the slope of the pavement and shall match the finished pavement elevation as shown in Standard Drawing 03370-4.
   2. In non-pavement areas, the top of the casting shall be not more than one (1) inch above the surrounding ground.
   3. In remote non-paved areas such as along creeks, open fields or wooded areas, the top of the casting shall be eighteen (18) inches above finish grade. Place soil around the casting with a maximum slope of 2 feet vertical to 1 foot horizontal to protect the external manhole seal.

3.07 FRAMES AND CHIMNEYS

A. All manholes shall be constructed with an external frame chimney seal as shown on Standard Drawing 03370-1 and as specified herein.

3.08 GRADE RING LINERS

A. All manholes constructed in paved areas shall be installed with a grade ring liner.

3.09 MANHOLE ADJUSTMENT

A. Adjust as shown in Standard Drawing 03370-5.
B. All manholes will shall be provided with adjustment ring(s) to facilitate adjustment:
   1. The manhole shall be provided with adjustment ring. The minimum adjustment for lowering the top of the manhole is 4 inches.
   2. The maximum adjustment for raising the top of the manhole is 12 inches.
C. If the top of an existing manhole is required to be raised to an elevation which will exceed twelve (12) inches or lowered more than the adjustment rings will allow, all vertical adjustments shall be made to the barrel of the manhole.
D. The joints shall be sealed with a double bead preformed flexible joint sealant as specified in 2.04.

3.10 MANHOLE TESTING.

A. The Contractor shall visually verify the absence of leaks and perform a vacuum test, on manholes that have inlet and outlet pipes of less than 42 inches in diameter, in accordance with Section 02702 -Sewer Pipe and Manhole Testing.

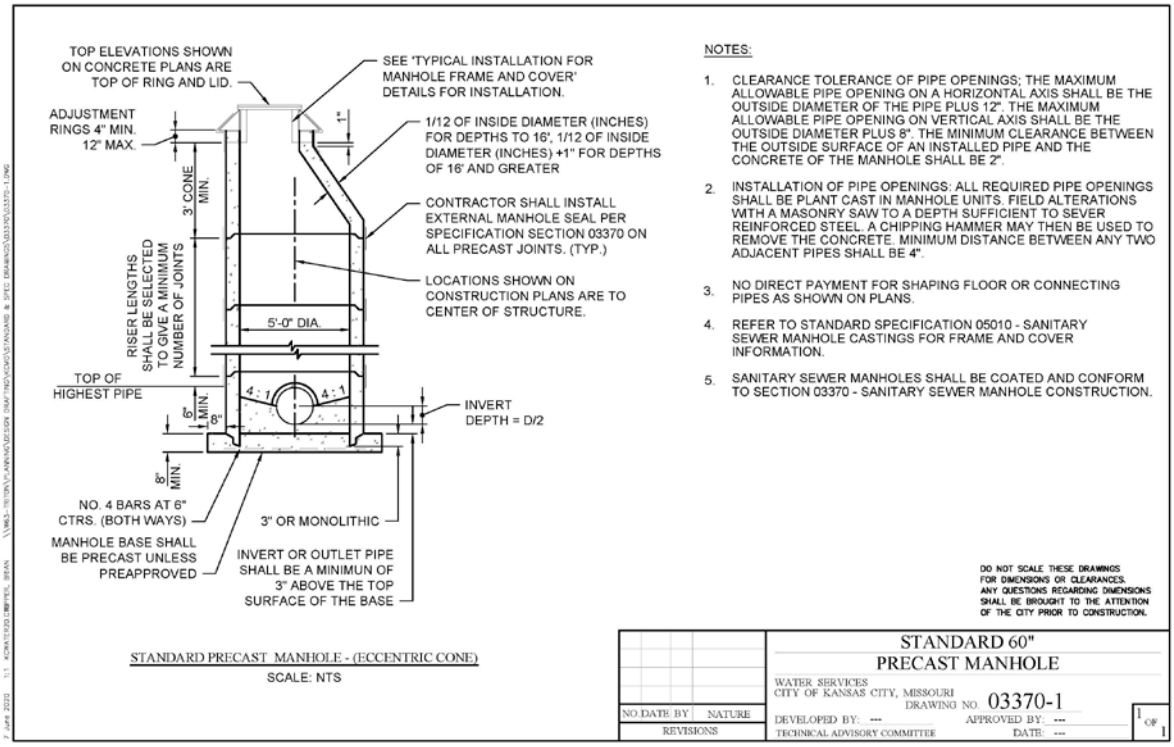

Standard Drawing 03370-1

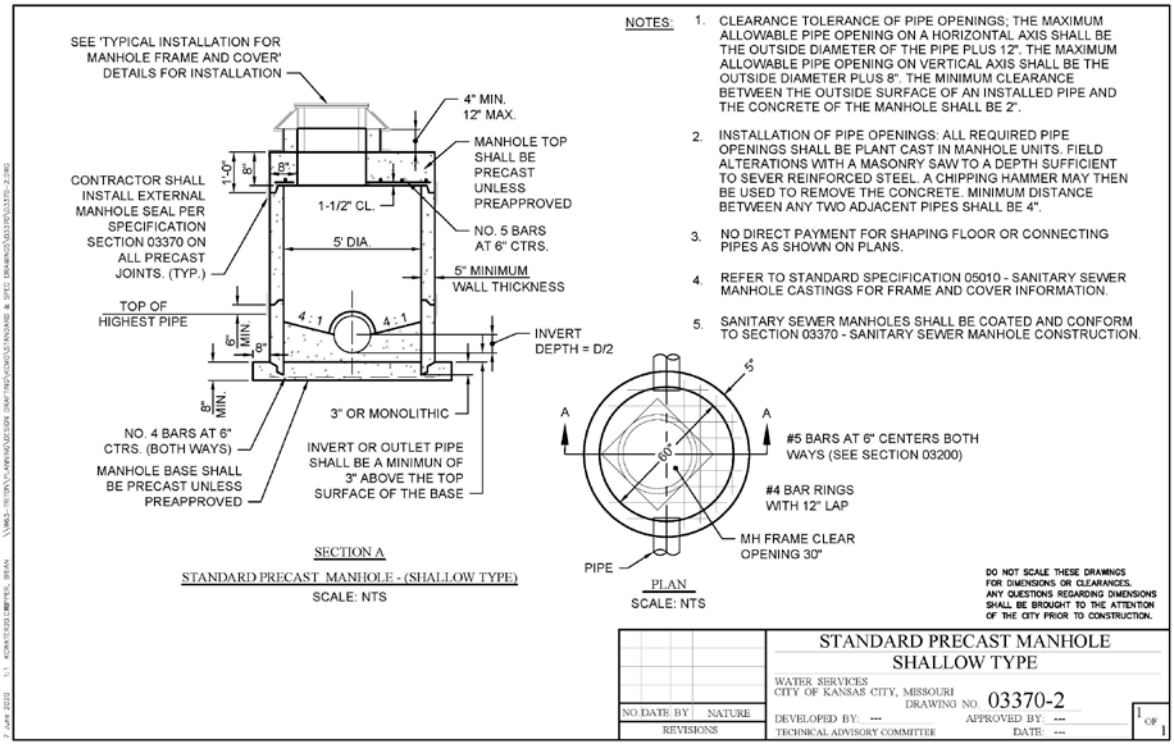

Standard Drawing 03370-2

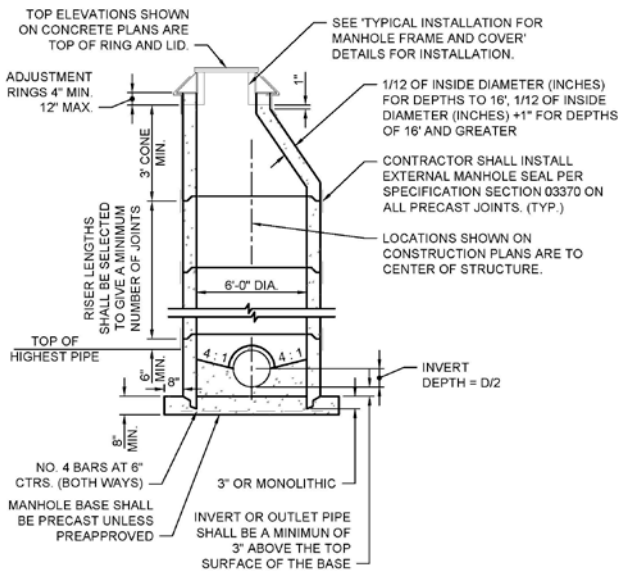

NOTES:

1. CLEARANCE TOLERANCE OF PIPE OPENINGS: THE MAXIMUM ALLOWABLE PIPE OPENING ON A HORIZONTAL AXIS SHALL BE THE OUTSIDE DIAMETER OF THE PIPE PLUS 12". THE MAXIMUM ALLOWABLE PIPE OPENING ON VERTICAL AXIS SHALL BE THE OUTSIDE DIAMETER PLUS 8". THE MINIMUM CLEARANCE BETWEEN THE OUTSIDE SURFACE OF AN INSTALLED PIPE AND THE CONCRETE OF THE MANHOLE SHALL BE 2".
2. INSTALLATION OF PIPE OPENINGS: ALL REQUIRED PIPE OPENINGS SHALL BE PLANT CAST IN MANHOLE UNITS. FIELD ALTERATIONS WITH A MASONRY SAW TO A DEPTH SUFFICIENT TO SEVER REINFORCED STEEL. A CHIPPING HAMMER MAY THEN BE USED TO REMOVE THE CONCRETE. MINIMUM DISTANCE BETWEEN ANY TWO ADJACENT PIPES SHALL BE 4".
3. NO DIRECT PAYMENT FOR SHAPING FLOOR OR CONN ECTING PIPES AS SHOWN ON PLANS.
4. REFER TO STANDARD SPECIFICATION 05010 - SANITARY SEWER MANHOLE CASTINGS FOR FRAME AND COVER INFORMATION.
5. SANITARY SEWER MANHOLES SHALL BE COATED AND CONFORM TO SECTION 03370 - SANITARY SEWER MANHOLE CONSTRUCTION.

DO NOT SCALE THESE DRAWINGS FOR DIMENSIONS OR CLEARANCES. ANY QUESTIONS REGARDING DIMENSIONS SHALL BE BROUGHT TO THE ATTENTION OF THE CITY PRIOR TO CONSTRUCTION.

STANDARD 72" PRECAST MANHOLE - (ECCENTRIC CONE)
SCALE: NTS

NO.	DATE	BY	NATURE
REVISIONS			

STANDARD 72" PRECAST MANHOLE

WATER SERVICES
CITY OF KANSAS CITY, MISSOURI
DRAWING NO. 03370-3
DEVELOPED BY: --- APPROVED BY: ---
TECHNICAL ADVISORY COMMITTEE DATE: ---
1 OF 1

Standard Drawing 03370-3

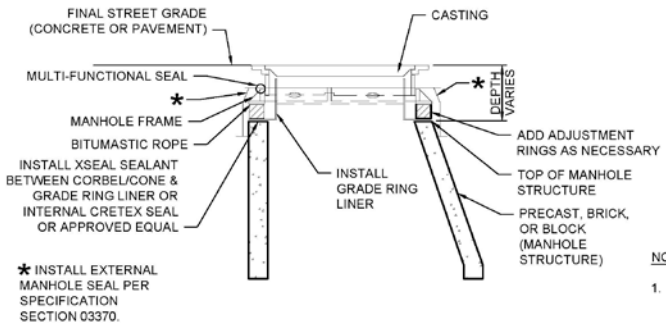

NOTES:

1. REFER TO STANDARD SPECIFICATION SECTIONS 03370 - SANITARY SEWER MANHOLE CONSTRUCTION AND 05010 - SANITARY SEWER MANHOLE CASTINGS FOR PRODUCTS AND EXECUTION.

TYPICAL INSTALLATION FOR MANHOLE FRAME & COVER IN PAVED STREETS (ADJUSTABLE) /SELF LEVELING
SCALE: NTS

DO NOT SCALE THESE DRAWINGS FOR DIMENSIONS OR CLEARANCES. ANY QUESTIONS REGARDING DIMENSIONS SHALL BE BROUGHT TO THE ATTENTION OF THE CITY PRIOR TO CONSTRUCTION.

NO.	DATE	BY	NATURE
REVISIONS			

TYP. INSTALL. FOR MANHOLE FRAME & COVER PRECAST MANHOLE IN PAVED STREETS (ADJUSTABLE) /SELF LEVELING

WATER SERVICES
CITY OF KANSAS CITY, MISSOURI
DRAWING NO. 03370-4
DEVELOPED BY: --- APPROVED BY: ---
TECHNICAL ADVISORY COMMITTEE DATE: ---
1 OF 1

Standard Drawing 03370-4

MANHOLE GRADE ADJUSTMENT:

1. CONTRACTOR TO FIELD VERIFY ACTUAL "H" TO RAISE MANHOLE TO GRADE.
2. MANHOLE SHALL BE THOROUGHLY CLEANED AND LOOSE DEBRIS REMOVED PRIOR TO BEGINNING REHABILITATION. CONTRACTOR SHALL PLACE COVERS OVER INVERTS AS NEEDED TO PROTECT FLOW LINE.

TYPE A: "H" PLUS EXISTING CHIMNEY GREATER THAN 12"

1. EXCAVATE MANHOLE TO 1 FT. BELOW CORBEL/WALL JOINT. REMOVE FRAME AND COVER. CLEAN AND STOCKPILE FOR REUSE.
2. LIFT CORBEL TO REMOVE FROM WALL SECTION.
3. ADD PRECAST WALL SECTIONS AND CORBEL ECCENTRIC CONE/FLATTOP ONLY TO BRING MANHOLE TO GRADE. FOR BRICK MANHOLES SEE 'TYPICAL REBUILDING EXISTING MANHOLE FOR RAISING MANHOLES TO GRADE' DETAIL.
4. CASTINGS SHALL BE CLEANED PRIOR TO REINSTALLATION, IF APPROVED BY ENGINEER.
5. REINSTALL CASTINGS AND COMPLETE FRAME SEAL. INSTALL NEW CASTINGS AND FRAME SEAL IF REQUIRED.

TYPE B: "H" PLUS EXISTING CHIMNEY LESS THAN OR EQUAL TO 12"

1. EXCAVATE MANHOLE TO 1 FT. BELOW CORBEL/WALL JOINT. REMOVE FRAME AND COVER. CLEAN AND STOCKPILE FOR REUSE.
2. ADD HDPE OR PRO-RINGS TO BRING MANHOLE TO GRADE.
3. CASTINGS SHALL BE CLEANED PRIOR TO REINSTALLATION, IF APPROVED BY ENGINEER.
4. REINSTALL CASTINGS AND COMPLETE FRAME SEAL. INSTALL NEW CASTINGS AND FRAME SEAL IF REQUIRED. INSTALL GRADE RING LINER IN PAVED AREAS.

* CONTRACTOR SHALL INSTALL JOINT SEALS PER SPECIFICATION 03370 ON ALL JOINTS ON GRADE ADJUSTMENTS.

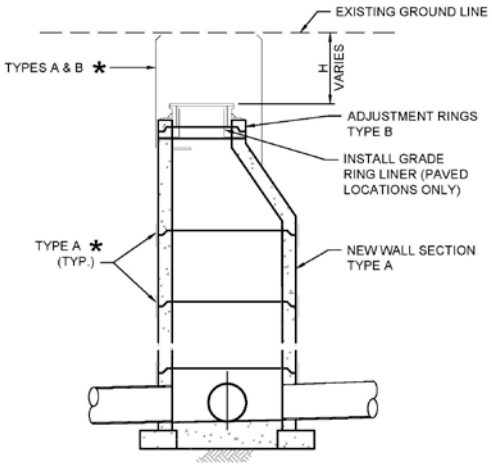

MANHOLE GRADE ADJUSTMENT
SCALE: NTS

DO NOT SCALE THESE DRAWINGS FOR DIMENSIONS OR CLEARANCES. ANY QUESTIONS REGARDING DIMENSIONS SHALL BE BROUGHT TO THE ATTENTION OF THE CITY PRIOR TO CONSTRUCTION.

NO.	DATE	BY	NATURE

REVISIONS

MANHOLE
GRADE ADJUSTMENT

WATER SERVICES
CITY OF KANSAS CITY, MISSOURI
DRAWING NO. 03370-5
DEVELOPED BY: ---
APPROVED BY: ---
TECHNICAL ADVISORY COMMITTEE
DATE: ---
1 OF 1

Standard Drawing 03370-5

END OF SECTION

SECTION 06010 – CURED-IN-PLACE PIPE (CIPP), CIPP POINT REPAIRS AND END SEALS

PART 1 - GENERAL

1.01 SUMMARY

This section covers work involved with the trenchless rehabilitation of sanitary sewers by the installation of a resin-impregnated flexible tube or liner which is inserted into the original conduit by use of hydrostatic head or air pressure. The resin is cured by circulation of hot water or steam within the tube. When cured and complete, the installed Cured-In-Place-Pipe (CIPP) liner shall extend from one manhole to the next in a continuous, tight-fitting, corrosion resistant, watertight, pipe within a pipe with a life expectancy of 50 plus years. Neither the CIPP system selected by the Contractor, nor its installation, shall cause adverse effects to any of the City's processes or facilities. This section also covers CIPP end seals, pipe end seals and CIPP sectional point repairs.

1.02 SPECIFICATION MODIFICATIONS

A. It is understood that throughout this section these Specifications may be modified by appropriate items in Section 01015 – Specific Project Requirements or as indicated in the Contract Drawings.

1.03 RELATED SECTIONS

A. Section 01015 – Specific Project Requirements.
B. Section 01270 – Adjustment Unit Prices and Measurement Procedures.
C. Section 01300 – Submittals.
D. Section 01566 – Cleanup Operations.
E. Section 01700 – Traffic Control.
F. Section 02676 – Sewer Line Cleaning.
G. Section 02686 – Closed Circuit Television (CCTV) Inspection.
H. Section 06012 – Rehabilitation of Sewer Laterals and Sewer Lateral Connections.

1.04 CODES AND STANDARDS

A. The publications listed below form a part of this specification to the extent referenced. The publications are referred to within the text by the basic designation only.
B. American Society for Testing and Materials (ASTM):

ASTM D638	Standard Test Method for Tensile Properties of Plastics.D790 Standard Test Method for Flexural Properties of Unreinforced and Reinforced Plastics and Electrical Insulating Material.
ASTM D790	Test Methods for Flexural Properties of Unreinforced and Reinforced Plastics and Electrical Insulation Materials.
ASTM D2990	Test Method for Tensile, Compressive and Flexural Creep and Creep-Rupture of Plastics.
ASTM D3567	Standard Practice for Determining Dimensions of "Fiberglass" (Glass-Fiber-Reinforced Thermosetting Resin) Pipe and Fittings.
ASTM D5813	Standard Specification for Cured-in-Place Thermosetting Resin Sewer Piping Systems.

ASTM F1216	Standard Practice for Rehabilitation of Existing Pipelines and Conduits by the Inversion and Curing of a Resin-Impregnated Tube.
ASTM F1743	Standard Practice for Rehabilitation of Existing Pipelines and Conduits by Pulled-in-Place Installation of Cured-in-Place Thermosetting Resin Pipe (CIPP).
ASTM F2561-20	Standard Practice for Rehabilitation of a Sewer Service Lateral and Its Connection to the Main Using a One Piece Main and Lateral Cured-in-Place Liner.
ASTM F2599	Standard Practice for the Section Repair of Damaged Pipe by Means of an Inverted Cured-In-Place Liner.
ASTM F3240-19	Standard Practice for Installation of Seamless Molded Hydrophilic Gaskets (SMHG) for Long-Term Water Tightness of Cured-in-Place Rehabilitation of Main and Lateral Pipelines.

1.05 DEFINTITIONS

A. Not used.

1.06 INFORMATION PROVIDED BY THE CITY

A. As provided in the Contract Documents.

1.07 SUBMITTALS

A. Submit as specified in Section 01300 – Submittals.
B. Product Data:
   1. Design approach and formula(s).
   2. Diameter, length and wall thickness for each segment of sewer.
   3. Liner tube materials.
   4. Liner Resin.
   5. Fittings and adapters.
   6. Method and material of sealing liner at manholes.
   7. Manufacturer's storage and handling requirements.
   8. Chemical and Physical Test Results conducted by a 3rd Party. Testing results shall be conducted within 18 months of submittal.
C. Tests Reports:
   1. Certified reports and logs of all tests and inspections. Tests shall be completed in the past 2 years.
D. Certificates, Affidavits and Qualifications.

1.08 CIPP INSTALLER QUALIFICATIONS

A. The CIPP Installer and its key field installation personnel scheduled for the project shall have experience within the last five (5) years, from the date of submittal, with the installation of CIPP as specified herein:
   1. The Contractor shall provide a minimum of five (5) references for projects that the installer and key personnel have completed at least 20,000 linear feet of CIPP in diameters ranging from 8 to 42 inches in diameter. If CIPP of pipes larger than 42 inches in diameter is specified for the Work, the Installer's references shall include experience with the installation of CIPP in pipe with like diameters. These project references shall include the name and telephone number of the contact person who has direct knowledge of the performance of the CIPP Installer. The reference

must indicate an acceptable performance by the Installer.

2. Resumes of key field installation personnel (superintendent, foreman, cutter operator) shall be submitted to the City/Design Professional. All changes of key personnel during the execution of the Project requires submittal of the resumes for the personnel to be substituted.

1.09 QUALITY ASSURANCE

A. The Contractor is responsible for the quality assurance and quality control of the Work.

B. Furnish the following prior to shipment or installation as applicable:

1. Affidavit of compliance with applicable standards for resins and liner tube materials.
2. Certification sealed by an insured registered professional engineer that the liner design and thickness meet the minimum structural design criteria specified herein or as otherwise required by the project.

C. Furnish the following after installation and testing:

1. Affidavit of compliance for hydraulic leak test of lined pipe where water inversion was utilized.
2. Affidavit of compliance for minimum liner thickness.

1.10 PRODUCT DELIVERY, STORAGE AND HANDLING

A. Delivery and storage of lining and other materials shall conform to requirements of the manufacturer. Contractor shall submit manufacturer's instructions for delivery and storage.

B. Contractor shall furnish required storage facilities.

C. Handle lining materials in compliance with the manufacturer's recommendations.

D. Damaged material, as determined by the City/Design Professional, is unacceptable for installation.

PART 2 - PRODUCTS

2.01 STRUCTURAL REQUIREMENTS

A. The liner tube shall be designed in accordance with ASTM F1216 Appendix - X1 Design Considerations. The design shall be based on a fully deteriorated pipe condition and shall be designed to withstand the structural requirements within this specification and designed for a minimum service life of not less than 50 years.

B. The Manufacturer and Contractor shall certify and provide structural calculations that the product at the installed thickness will adequately support all loads.

C. Minimum Structural Standards. The cured CIPP material shall conform to the following minimum structural standards per ASTM D5813 and F1216:

Flexural Strength (test method ASTM D790)	4,500 psi
Modulus of Elasticity (ASTM D790)	400,000 psi

D. The CIPP design assumes no bonding to the original pipe. The required minimum design thickness of each liner wall shall be in accordance with ASTM F1216 Appendix - X1 Design Considerations with the minimum design parameters listed in Table 1 on the following page.

Table 1. CIPP Minimum Design Parameters

Parameter	Minimum
Mean diameter of original sewer	As measured
Depth of cover to top of pipe for Dead Load calculation	12.5 feet
Water table below surface	0 feet
Unit weight of soil	130 pcf
Soil Modulus (E')	700 psi
Ovality	2%
Live Load at 8 feet depth of cover	HS-25
Deteriorated Condition	Fully
Factor of Safety	2
Minimum design CIPP wall thickness unless approved by City	6 mm for 8-inch pipe, 7 mm for 10-inch pipe and 7.5 mm for 12-inch pipe

E. The Contractor is required to field verify the mean diameter, minimum diameter and depth of cover of the existing pipeline, prior to ordering the liner material. All measurement information and the calculated liner thickness shall be provided to the City/Design Professional prior to ordering the liner. For diameters not listed in Table 1, based on field conditions, the Contractor may request a Live Load variance (from HS-25 to HS-20) to adjust the calculated liner thickness.

2.02 ADJUST THE DEPTH OF COVER FOR DEAD LOAD CALCULATION IF THE MEASURED DEPTH IS GREATER THAN THE MINIMUM VALUE IN THE TABLE 1. ADJUST LIVE LOAD CALCULATION FOR DEPTH OF COVER LESS THAN 8 FEET

A. Flexible Felt Liner Tube:
   1. The CIPP shall meet the requirements of ASTM F1216.
   2. The tube shall consist of one or more layers of flexible needled felt material or an equivalent nonwoven or woven material capable of carrying resin and withstanding installation pressures and curing temperatures.
   3. The outside layer of the tube (before insertion) shall be translucent plastic coated with flexible material that allows visual inspection of the proper impregnation of the tube fabric with resin.
   4. The tube shall be fabricated to a size that when installed will tightly fit the internal circumference and length of the original pipe. Allowance shall be made for longitudinal and circumferential stretching during the insertion process. The minimum length shall be that deemed necessary by the Contractor to effectively span the distance between respective access points without stretching the tube. The Contractor shall measure the lengths and diameters in the field before fabricating the tube. Individual insertion runs can be made over one or more manhole sections as determined in the field by the Contractor. The Contractor will be allowed to insert only the length of liner that it can install, cure and place back in service within the allowable working hours. Intermediate manholes shall be reopened, unless otherwise directed by the City/Design Professional.
   5. The tube shall be homogenous across the entire wall thickness containing no intermediate or encapsulated elastomeric layers. No materials shall be included

in the tube that is subject to delamination of the cured CIPP.

6. The tube shall have a uniform thickness when compressed at installation pressure.
7. The tube can be reinforced with carbon or glass fiber material for added strength as approved by the City.
8. The wall color of the interior pipe surface of the CIPP after installation shall be white, light blue or light green so that a clear and detailed examination with CCTV inspection equipment may be made.

B. Resin:

1. The resin system shall be specifically formulated for sewage service, shall have a documented history of use in similar applications and shall meet the meet the minimum chemical resistance requirements of ASTM F1216. The resin's Spectroscopy wave length chart shall be submitted by the Contractor for the resin proposed for installation on the project. If required, the contractor shall provide a sample of the resin to the City for testing purposes. The resin shall be tinted so that adequate saturation can be readily observed.
2. The tube shall be impregnated with sufficient amount of resin to ensure that the resin is observed on the outer surface of the tube. After the tube is cured, it shall show satisfactory evidence of a fully impregnated tube or the existence of excess resin on the outer surface. The quantities of the liquid thermosetting material shall be sufficient to provide the thickness specified herein and to fill the volume of air voids in the liner tube with additional allowances for polymerization shrinkage and the loss of resin through cracks and irregularities in the original pipe wall.
3. The contractor shall submit to the City/Design Professional, resin saturation charts that indicate the manufacturer's recommended pounds of resin required to fully saturate each size and thickness of fabric tube.
4. The contractor shall submit, to the City/Design Professional, the factory wet-out report for each liner section proposed for installation on the project. The report shall accompany the delivery of each liner section and include, in addition to other project information, the specific resin product that was saturated into the tube and the amount of resin in pounds/foot that were saturated into the tube.

2.03 CIPP END SEAL (WATERSTOP)

A. Waterstop shall be "Insignia End Seal Sleeve" by LMK, Inc. or City approved equivalent meeting the requirements of ASTM F3240-19.

2.04 PIPE END SEAL LINER

A. The Pipe End Seal Liner is to be installed at the interface of the sewer pipe and the adjoining manhole. The intent of liner is to provide the rehabilitation of short lengths of pipe at the interface of the pipe and the adjoining manhole by the installation of a resin-impregnated flexible tube. The liner shall conform to the contours to form a hard, impermeable, corrosion resistant cured-in-place pipe end seal liner. The liner prevents water from migrating between the pipe and the manhole wall.

B. The liner shall be fabricated from materials that will be chemically resistant and withstand internal exposure to domestic sewage having a pH range of 5 to 11 and a temperature up to 150 degrees Fahrenheit when cured. The liner shall be structurally designed for a minimum service life of 50 years.

C. Resin – The resin used in the curing process shall have the following characteristics:

1. The resin shall be a 100% solids, corrosion-resistant, two-part silicate or epoxy-

based resin system.

2. Resins may contain pigments, dyes or colorants which will not interfere with visual inspection of the cured liner.

D. Tube – The liner that is installed shall have the following characteristics:

1. The tube shall consist of one or more layers of a flexible, absorbent, needled (non-woven) fleece/felt fabric meeting the requirements of ASTM F1216, ASTM F1743 and ASTM D5813. The tube shall be capable of being thermo-bonded along the prescribed circumference and length, completely compatible with the resin system used, and able to withstand the installation pressures and curing temperatures utilized. The tube material shall be able to stretch to fit irregular pipe/manhole interface sections, bridge missing pipe/mortar segments, and negotiate bends/contours. Any seams in the tube shall be stronger than the non-seamed felt material.
2. The pipe end seal lining material shall be able to be fully impregnated with the resin system per the manufacturer's recommendations. The cured pipe end seal lining material shall conform to the minimum structural standards listed below:

	Standard	**Results**
Compressive	ASTM D-695	4,500 psi
Tensile Strength	ASTM D-638	3,000 psi

3. The installed liner shall be fabricated to a size that will tightly bond to the internal pipe diameter and adjoining manhole interface to be sealed and rehabilitated. Allowances shall be made for the longitudinal and circumferential stretching that occurs during placement of the tube, as well as the minimum extension beyond the pipe/manhole interface to be rehabilitated.
4. Contractor shall be responsible for measuring and determining actual pipe diameters and lengths in the field.
5. The tube shall be homogeneous across the entire wall thickness and contain no intermediate or encapsulated elastomeric layers. No material shall be included in the tubes that are subject to delamination in the cured CIPP. No dry or unsaturated layers shall be evident.

2.05 CHEMICAL RESISTANCE

A. The cured liner tube material shall meet the minimum chemical resistance requirements of ASTM F1216 Appendixes X2 Chemical-Resistance Tests.

2.06 QUALITY CONTROL

A. The Contractor is responsible for the quality assurance and quality control of the Work.

B. The Contractor shall submit samples to a laboratory for a report to be developed. Prior to shipping the samples to a laboratory, the Contractor shall obtain approval of the samples to be tested from the City/Design Professional.

C. If the results of the tests do not meet the requirements listed in this specification and ASTM standards, the City may require the Contractor to perform further destructive tests on the liner segment in question; additionally, if the test results do not meet the requirements, the Contractor may be required to install a Type II liner per ASTM D5813. If the additional test results meet the requirements, a sectional point repair

shall be made in accordance with this Section, paragraph 2.07 and 3.16, at each location where destructive samples were obtained. All costs associated with additional testing, Type II liner installation and sectional point repairs shall be at the Contractor's sole expense.

D. Wet-Out Location:
   1. To facilitate proper inspection, the wet-out location shall be identified so that the City may witness the wetting out procedures, if necessary. It will be at the City's discretion to witness this test and the wet-out of any or all the liners supplied for the project.

E. Inversion Installation:
   1. The Contractor shall inform the City as to the maximum allowable inversion head (pressure) that can be used in inverting the tube into the pipe (as recommended by Manufacturer) without rupturing or diminishing the diameter and/or the thickness of the tube. Such installation pressure shall be monitored at all times during the insertion operation and the tube shall be rejected and removed prior to curing if the recommended inversion head force is exceeded. The Contractor shall submit the minimum and maximum inversion required to fully expand the liner against the host pipe.

F. Service Lateral Reinstatement:
   1. The CIPP installer shall determine if a service connection is active prior to rehabilitation of the sewer. Dye testing, CCTV with a lateral launch camera and all other means shall be used to determine if a connection is active or not. Only active service connections and laterals shall be reinstated. Upon completion of all testing to determine active service connections, Contractor shall review results with the City's representative and obtain concurrence prior to reinstatement.
   2. The CIPP installer shall install a sectional point repair in accordance with paragraph 2.07 and 3.16 for any reinstated non-active service connection. If the pipe diameter is greater than eighteen (18) inches, the Contractor shall submit to the City a method of repair for approval. All cost associated with repairs closing non-active service connections shall be at the Contractor's expense.
   3. The City may direct the Contractor to complete point repairs of any misaligned active service connection that is opened after CIPP has been installed. Connections to CIPP lined pipe shall be made as shown in drawing 06010-1. This point repair shall be as directed and approved by the City and paid according to the appropriate Adjustment Unit Price.

2.07 CURED-IN-PLACE-PIPE (CIPP) POINT REPAIR LINER

A. All CIPP lining products shall comply with the latest edition of ASTM F1743 or ASTM F1216. The finished point repair pipe liner shall be fabricated from materials which when cured will be chemically resistant to and will withstand internal exposure to domestic sewage having a pH range of 5 to 11 and a temperature up to 150 degrees Fahrenheit. The point repair liner shall be structurally designed for a minimum service life of 50 years.

B. Resin – The resin used in the curing process shall have the following characteristics:
   1. The resin shall be a corrosion-resistant, two-part silicate- or epoxy-based resin system that is ambient-cured or steam-cured and includes all required catalysts and initiators such that when properly cured, creates a composite that meets or exceeds the applicable requirements of ASTM F1216, ASTM F1743, and ASTM D5813, the physical properties stated in these specifications, and the properties claimed in the submitted and approved CIPP sectional point repair liner design for this project.

The resin system shall allow for the CIPP sectional point repair liner to bond to the original (host) pipe.

2. Resins may contain pigments, dyes or colorants which will not interfere with visual inspection of the cured liner.

C. Tube – The point repair tube installed into the host pipe and ultimately cured-in-place shall have the following characteristics:

1. The tube shall be fabricated from a two-side fiberglass mat, comprised of a chopped fiber mat on one side, bonded to a woven fiberglass mat on the other side. The fiber mat shall meet the requirements of ASTM F1216, ASTM F1743 and ASTM D5813. The tube shall be capable of being thermo-bonded along the prescribed circumference and length, completely compatible with the resin system used, and able to withstand the installation pressures and curing temperatures utilized. The tube material shall be able to stretch to fit irregular pipe sections, bridge missing pipe segments, and negotiate bends. Any seams in the tube shall be stronger than the non-seamed felt material.
2. The point repair liner thickness design for each pipe size shall be in accordance with ASTM F1216, as well as the requirements listed in this specification. If Contractor encounters conditions that require or result in deviations from these assumptions, Contractor shall consult with Owner prior to installing liner. In the liner thickness calculations, the following requirements and assumptions shall apply:
   a. The minimum acceptable cured-in-place liner thickness for CIPP sectional point repairs for fully-deteriorated pipe that is 15-inch diameter or less, shall be 3.0 millimeters (mm).
   b. Sectional point repair liners shall bond to the original (host) pipe wall.
   c. The height of groundwater above the pipe shall be a minimum of fifty percent (50%) of the pipe depth or 8 feet above top of pipe, whichever is greater.
   d. Soil density of 120 pounds per cubic foot.
   e. The enhancement factor (K) shall be no greater than seven point zero (7.0).
   f. The minimum safety factor shall be two point zero (2.0).
   g. The flexural modulus of elasticity shall be reduced to no more than 50% to account for long-term effects and used in the design equation E_L.
   h. CIPP sectional point repair liners shall have a minimum service life of 50 years.
3. The point repair lining material shall be able to be fully saturated with the liquid resin system, per the manufacturer's standards. The cured point repair lining material shall conform to the minimum structural standards listed below:

	Standard	**Results**
Flexural Stress	ASTM D-790	27,000 psi
Modulus of Elasticity	ASTM D-790	800,000 psi

4. The CIPP sectional point repair liner manufacturer shall have conducted long-term testing for flexural creep of the CIPP liner material installed. Such tests shall have measured the performance of the materials (tube and resin) and general workmanship of the installation and curing procedures. The performance test results shall be used to determine the long-term, time-dependent flexural modulus

to be utilized in the product design. A percentage of the instantaneous flexural modulus value is used in design calculations for external buckling. Retention values for the long-term flexural modulus shall be no more than 50% of the short-term test results. The materials utilized for this project shall be of a quality equal to, or better than, the materials used in the long-term performance tests with respect to the initial flexural modulus used in the CIPP design calculations.

5. The tube shall be fabricated to a size that, when installed, will bond to the internal circumference of the original conduit segment length to be rehabilitated. Allowances shall be made for the longitudinal and circumferential stretching that occurs during placement of the tube as well as the minimum one-foot extension beyond each side of the conduit segment to be rehabilitated in order to develop a firm adhesion to portions of the host pipe that have maintained structural integrity around the rehabilitated segment. The hydraulic cross-section of the pipe liner shall be maintained as large as possible.
6. The tube diameter shall be that deemed necessary by the Contractor to effectively carry out the packer inflation process and seal the point repair liner across the conduit segment to be rehabilitated. Wrinkles that exceed 1/2" in height or are between the 3 to 9 o'clock positions will not be allowed and must be removed prior to acceptance. Contractor shall be responsible for measuring and determining actual pipe diameters and lengths in the field.
7. The tube shall be homogeneous across the entire wall thickness and contain no intermediate or encapsulated elastomeric layers. No material shall be included in the tubes that are subject to delamination in the cured CIPP. No dry or unsaturated layers shall be evident.

PART 3 - EXECUTION

3.01 GENERAL

A. The Contractor shall comply with the following procedures unless other procedures are approved by the City.

B. Prior to the commencement of the actual liner tube inversion process, the Contractor shall plan its work after review of preliminary CCTV television inspection performed by the contractor. All point repairs shall be satisfactorily completed, equipment and material mobilized; and the City shall be informed on the impending work schedules (see paragraph C. below) for liner tube installations.

C. General construction sequencing is as follows: cleaning of mainline, CCTV of mainline, all obstructions removed, mainline point repairs made where needed, bypass pumping established, mainline CIPP liner installed, laterals reinstated, LCR/MTH's installed (see Section 06012 – Rehabilitation of Sewer Laterals and Sewer Lateral Connections), manholes rehabbed and site restored.

3.02 SAFETY

A. The Contractor shall carry out its operations in accordance with all OSHA and manufacturer's safety requirements. Particular attention is drawn to those safety requirements involving working with scaffolding and entering confined spaces.

B. The Contractor shall inform City of any hazardous material encountered during this project.

C. Traffic control shall be performed in accordance with Section 01700 – Traffic Control.

3.03 CLEANING OF THE SEWER LINE

A. The Contractor shall be required to remove all internal debris from the sewer lines, so the entire pipe can be thoroughly inspected and successfully reconstructed. Pipe to be lined shall be cleared of protruding service connections, debris or other obstructions that can hinder liner tube inversion. Cleaning shall be performed as specified in Section 02676 – Sewer Line Cleaning.

3.04 BYPASS PUMPING

A. The Contractor shall provide for the flow of sewage around the section or sections of pipe designated for rehabilitation and inspection and at a cost incidental to the insertion of the liner tube. The bypass shall be made by plugging the line at an existing upstream manhole or adjacent system. The pumping system shall be of adequate capacity and size to handle at least two times the max month flow rate. Contractor shall be responsible for verifying flow rates for each section of pipeline to be lined and determining the max month flow rate. The Contractor shall submit a flow control implementation plan for the City's acceptance prior to construction.
B. Bypassing includes all mainline bypassing and service line bypassing, if required.
C. Wastewater shall not be allowed to spill into storm drains, street gutters or open excavations. Any spills that occur must be taken care of properly and immediately. The City shall be immediately notified and the Contractor shall bear all costs associated with any spills from its bypass system.
D. The Contractor shall take all necessary steps to prevent flooding of any residence or business and shall be liable for any damages incurred because of the Contractor's operation.
E. Once liner is completely cured and service connections are reinstated:
   1. Place rehabilitated sewer sections back in service.
   2. All accumulated debris that is built up behind the bypass plug shall be removed in accordance with paragraph CLEANING OF THE SEWER LINE.

3.05 CCTV INSPECTIONS

A. CCTV shall be as specified in Section 02686 – Closed Circuit Television (CCTV) Inspection.
B. The CIPP installer shall provide inspection of wastewater mains by experienced personnel specially trained in locating breaks, obstacles and active service connections by CCTV, as specified in other sections. All inspections shall be in accordance with NASSCO PACP standards.
C. The inspection of pipelines is also to aid in the determination of active service connections and the addresses which they serve.
D. The interior of the wastewater main shall be carefully inspected to determine the location of all active lateral connections, the location and extent of any structural failures, pipe deflections, offset joints or other factors that will affect the installation or performance of the liner tube system.
E. Contractor shall notify City when point repairs are required where existing sewer pipe sections must be removed or replaced to successfully install the CIPP liner.

3.06 LINE OBSTRUCTIONS

A. It shall be the responsibility of the Contractor to clear the line of obstructions such as solids and roots that will prevent the insertion of the CIPP.

B. If pre-installation inspection reveals an obstruction such as a protruding service connection, dropped joint, excessively deformed section, mineral deposits or a collapse that will prevent the inversion process and it cannot be removed by conventional sewer cleaning equipment, then the Contractor will notify the City and Contractor shall make a point repair excavation to uncover and remove or repair the obstruction:
   1. Such excavation shall be approved in writing by the City prior to the commencement of the work and shall be considered as a separate pay item as provided in the Bid Schedule.
   2. Where sections of the existing sewer pipe must be removed (open cut point repair), a circular form or new pipe with couplings, shall be installed as approved by City.
   3. This work shall be performed by the Contractor as recommended by the CIPP manufacturer and directed by the City.

3.07 EXISTING VOIDS

A. Field locate and record all voids and holes to be filled. Record shall include the following dimensions and measurements:
   1. Distance from both upstream and downstream manholes to each void or hole.
   2. Length, width and depth of each void or hole, such that approximate volume of fill material may be calculated.
   3. Location of each void or hole in the sewer crown stated in clock position as viewed from downstream.

B. Prior to installation of the inversion liner, submit recommendations for filling voids, including those to be filled after installation of the liner. The City will issue a Request for Proposal and after acceptance of the Contractor's proposal, a Work Change Directive and Change Order will be issued for performance of the required Work.

C. Fill all voids or holes recorded. All large voids or holes shall be filled with concrete, non-shrink grout or other material. Voids and holes below the centerline elevation of the existing sewer shall be filled prior to installation of the liner. Voids and holes above the centerline elevation of the existing sewer may be filled after installation of the liner. Perform in a manner to ensure that voids and holes are filled. Plug any holes in the liner wall with a manufacturer's approved method. Submit documentation of manufacturer's approved method of plugging holes.

3.08 PUBLIC COMMUNICATIONS

A. Notification of affected property owners shall be in accordance with Section 01581 – Public Communications.

B. Contact any home or business which cannot be reconnected within the time stated in the written notice.

3.09 TEMPORARY FACILITIES

A. If so required by a served business, portable toilets for their use by their employees will be furnished and serviced by the Contractor. The costs of these items shall be included in the cost of CIPP. No additional payment will be made by the City.

3.10 CIPP INSTALLATION

A. CIPP installation shall be in accordance with ASTM F1216, with the following additional requirements:
   1. Immediately prior to installing the liner, the contractor will completely flush and

televise the pipeline for inspection by the City representative to ensure a clean, debris free pipeline.

2. Tube Impregnation (Wet Out):
   (a) The Contractor shall designate a location where the uncured resin in original containers and the fiber felt liner tube shall be vacuum impregnated prior to installation.
   (b) A resin/catalyst system compatible with the requirements of this method and applicable to the long-term service requirements of the pipeline, shall be used.
   (c) After the felt liner tube has been fully impregnated with resin/catalyst the liner tube shall be fully installed within manufacturer's recommendations.
3. All pulled-in-place methods of installation is prohibited.
4. Curing:
   (a) Once the curing process has started, the pressure shall be maintained between the manufacturer's minimum and maximum pressures until the operation has been completed. Should the pressure deviate substantially from within the range of minimum and maximum pressures, the installed tube may be tested to determine that it meets the contract requirements. If it fails to meet the contract requirements, the Contractor shall make repairs as described in paragraph QUALITY CONTROL.
   (b) Contractor shall continuously monitor and record pressure during the curing process. A complete log of the pressures and temperatures shall be maintained on the site and shall be furnished to the City after each inversion.
   (c) The City representative may also monitor the curing of the liner to verify general compliance with the recommended manufacturers cure schedule.
   (d) Contractor shall use an odor neutralizer, during or after the lining operations, if odors are present near a home/business or inside the home/business. Contractor shall use Ecosorb by OMI Industries or City approved equal.

3.11 SEALING CIPP AT MANHOLES

A. The liner tube shall extend a minimum of 2 to 3 inches into the manhole.
B. Prior to CIPP installation, the Contractor shall install CIPP end seals (waterstops) to the interior circumference of the existing sewer at each end of the CIPP liner per manufacturer's recommendations. If a liner is "shot through" a manhole during installation, CIPP ends seals shall also be placed on both sides of the manhole. No separate payment for CIPP end seals shall be made.
C. The invert of the manhole shall be reworked (smoothed and built up) to match the flow line of the new liner tube. Submit methods and materials for approval before installation.
D. If the installed liner tube fails to make a tight seal, the Contractor shall apply a sealant at that point.
   1. The sealant shall be compatible with materials used in the lining process and shall be as recommended by the manufacturer of the pipe liner.
   2. Seal shall be composed of a resin mixture compatible with the liner tube as recommended by the liner tube manufacturer.

3.12 SERVICE CONNECTIONS

A. After curing of the CIPP has been completed and after the pressure test specified herein, the Contractor shall reinstate only the existing active service connections and branch connections.

B. It is the intent of these specifications that active service connections and branch connections be reopened without excavation and in the case of non-man entry pipes, from the interior of the pipeline utilizing a remotely controlled cutting device, monitored by a closed-circuit television camera, which fully opens the service connections. Reinstatement of sewer service shall provide a full diameter hole, free from burrs or projections and finished with a smooth edge.

C. The Contractor shall certify he has a minimum of two (2) complete working lateral cutter systems, plus spare key components on the site before each insertion.

D. If the lateral cutter systems are not functional, no additional payment will be made for excavations for reinstating service connections and the Contractor will be responsible for all costs and liability associated with such excavation and restoration.

E. All active service laterals shall be reinstated within 8 hours of beginning the inversion process unless a written plan is submitted by the contractor and approved by City prior to the inversion process.

   1. Contractor shall provide temporary facilities or hotel accommodations for the residents if sewer service is not restored within 8 hours.

3.13 INSPECTION

A. Water tightness:

   1. For CIPP liners installed under hydrostatic head, leakage testing the CIPP shall be accomplished during cure while under a positive head.

B. Visual Inspection:

   1. Visual inspection of the CIPP liner shall be in accordance with ASTM F1216.
   2. All defects discovered during the post CIPP CCTV inspection shall be corrected by the Contractor at the Contractor's expense before the work will be considered complete by the City. Defects include any wrinkles in the finished liner greater than one-half (1/2) inch or the results in reduction of pipeline hydraulic capacity. If directed by the City, Contractor shall remove the wrinkle and install a sectional point repair in accordance with this Section, paragraph 2.07 and 3.16, at no additional cost to the City. Any wrinkling in a glass or carbon fiber layer of Composite CIPP tube can reduce the structural capacity. Wrinkling in glass or carbon fiber reinforcement is not allowed. Contractor shall remove the wrinkle and install a sectional point repair in accordance with this Section, paragraph 2.07 and 3.16, at no additional cost to the City.
   3. Pinholes in the CIPP liner are not allowed and the cured CIPP liner shall be rejected. All observed pinholes shall be addressed and repaired by the Contractor at no additional cost to the City.
   4. The post-construction CCTV data shall be conducted once all work in a line segment is complete (main line, point repairs, laterals and manhole rehabilitation).
   5. Direct flow around sections being televised using the same method required for installation.

3.14 PIPE END SEAL LINER

A. Contractor shall apply the approved resin onto the pipe end seal liner onsite prior to installation and provide all equipment required to install the liner into the pipe and cure it once in place**.**

B. The Pipe End Seal Liner shall be installed in accordance with the latest practices given in ASTM F1743 for resin-impregnated, pulled-in-place installations.

C. Resin-Impregnation and Wet-Out – Each liner to be installed shall be infused or impregnated with a thermo-setting bonding resin. This process shall include the following procedures:

   1. The Contractor shall designate the location where the liner will be impregnated with resin prior to installation. The resin shall be hand-applied and troweled onto the liner to achieve a uniform distribution of the resin throughout the material. Installer or Contractor shall allow Owner to inspect the materials and the "wet-out" procedure.
   2. Only 100% solids resin systems which are approved by the liner manufacturer shall be utilized.
   3. The quantity of resin used for the liner's impregnation shall be sufficient to fill the volume of air voids in the liner with additional allowances made for any shrinkage or anticipated loss of resin through cracks and irregularities in the host pipe and manhole walls.

D. Insertion and Installation of Liner – The insertion and installation of the liner into the defective pipe/interface segments shall conform to the following procedures:

   1. Contractor shall wrap the impregnated liner material onto the installation packer and insert the packer with liner through the adjoining pipe/manhole interface to be lined.
   2. While in the host pipe, the packer with liner shall be placed at a position to fully reline the defective area to be rehabilitated. Contractor shall use cameras, push rods, and positioning ropes/cables as necessary to ensure proper placement.
   3. Contractor shall slowly inflate the packer to a safe and appropriate working pressure, as recommended by the liner manufacturer.
   4. Upon proper positioning and inflation, Contractor shall allow liner to cure per the manufacturer's recommendations.

E. Curing Liner – Curing of the liner shall conform to the following procedures:

   1. The curing period shall be for the duration recommended by the resin manufacturer based on the installation process used. The installation packer shall not lose air pressure during the curing process.
   2. The finished liner may overlap at least two inches along the interior manhole wall along the entire interface circumference in order to develop a firm adhesion/seal to portions of the host pipe and manhole wall. The liner shall be as free of visual defects such as foreign inclusions, dry spots, pinholes, and delamination.

3.15 FIELD QUALITY CONTROL

A. Finish:

   1. The finished CIPP liner shall be continuous over the entire length of an insertion run between two manholes and be free, as commercially practicable, from visual defects such as foreign inclusions, dry spots, pinholes and delamination. It shall also meet the leakage/pressure test requirements specified herein.
   2. Any defects which will affect the integrity or strength of the liner tube shall be repaired at the Contractor's expense, in a manner recommended by the manufacturer and mutually agreed upon by the City and the Contractor.

B. Sampling:
   1. Samples should be obtained from every liner section installed in accordance with ASTM F1216.
   2. The sample form pipe shall be PVC pipe (SDR-26, AWWA C900) of the minimum lengths indicated in the table below. Internal preparation shall be made to the PVC sample form pipe using a release agent such as PVA (polyvinyl alcohol solution) so that the liner sample can be removed without damage. Restrained samples shall be for pipe sizes up to 18-inch in diameter. For pipe sizes larger than 18-inch diameter, provide samples as described in ASTM F1216 8.1.2.

Table 2. Sample Requirements

Liner Thickness	Minimum Sample Form Pipe Length
6 - 7.5 mm	12 inches
8 mm and greater	20 inches

   3. An identification number shall be marked on the outside of the sample form pipe. This number will be assigned by the City/Design Professional.
   4. The liner shall be cured and cooled down within both the host pipe and the sample form pipe in accordance with the Construction Contract requirements.
   5. The sample shall then be removed and trimmed to proper size, labeled with the correct identification number and submitted for testing at the Contractor's expense.
   6. Failure to meet or exceed any of the requirements of this specification based on the design parameters outlined in the Construction Contract Documents shall be cause for rejection.
   7. The Contractor shall retain all samples not selected for testing until completion and acceptance of all Work. Samples shall then be turned over to the City, unless otherwise directed.

C. Material Testing:
   1. CIPP samples shall be tested in accordance with ASTM F1216. The following tests shall be performed by a 3rd Party Certified Independent laboratory, approved by the City at the Contractor's sole expense:
      (a) Short-Term Flexural (Bending) Properties in accordance with ASTM F790.
      (b) Tensile Properties Tests shall be performed in accordance with ASTM D638.
      (c) CIPP Wall Thickness Tests shall be performed in accordance with ASTM. D3567 and ASTM D5813. The average thickness of the installed CIPP shall meet or exceed the minimum design thickness. The minimum installed/cured wall thickness at any point shall not be less than 99% of the specified design thickness.
      (d) The City may witness inspection and testing of the materials, when requested prior to testing.
   2. Frequency:
      (a) Twenty percent (20%) of the CIPP samples, to be selected by the City, shall be tested by the independent laboratory. Additional samples shall be tested, if there are any failures within the first 20%.
   3. Reports:
      (a) Three copies of all certified reports and logs of all tests and inspections conducted shall be submitted directly to the City.

3.16 CURED-IN-PLACE-PIPE (CIPP) POINT REPAIR LINER

A. The Contractor shall use equipment and methods adequate to protect the pipe, joint elements, and prevent shock contact of adjacent units during moving, storage, or installation. Damaged sections that cause reasonable doubt as to their structural strength or water-tightness shall be repaired by Contractor.

B. Resin-Impregnation and Wet-Out – Contractor shall apply the approved resin onto the sectional point repair liner on-site just prior to installation and provide all equipment required to install the point repair liner into the conduit and cure it once in place**.** Each point repair liner to be installed on the project shall be infused or impregnated with a thermo-bonding resin. This process shall include the following procedures:

1. The Contractor shall designate the location where the point repair liner will be impregnated with resin prior to installation. The resin shall be hand-applied and troweled onto the liner to achieve a uniform distribution of the resin throughout the material. This is considered the “wet-out” process. Installer or Contractor shall allow Owner to inspect the materials and the "wet-out" procedure.
2. Only resin systems which are approved by the point repair liner manufacturer shall be utilized.
3. The quantity of resin used for the liner’s impregnation shall be sufficient to fill the volume of air voids in the liner with additional allowances made for any shrinkage or anticipated loss of resin through cracks and irregularities in the host pipe wall.

C. Insertion and Installation – The CIPP liner shall be installed in accordance with the latest practices given in ASTM F1743 for resin-impregnated, pulled-in-place installations. The insertion and installation of the point repair liner shall conform to the following procedures:

1. Contractor shall wrap the impregnated liner material onto the installation packer and insert the packer with liner through an existing manhole or other access point.
2. While in the host pipe, the packer with liner shall be placed at the center of the defective area to be rehabilitated. Contractor shall use cameras, push rods, and positioning ropes/cables as necessary to ensure proper placement.
3. Contractor shall slowly inflate the packer to a safe and appropriate working pressure to pop the binding wire and initiate any audible device that signifies sufficient inflation.
4. Upon proper positioning and inflation, Contractor shall allow point repair liner to cure per manufacturer’s recommendations.
5. Curing – Curing of the liner shall conform to the following procedures: the curing period shall be for the duration recommended by the resin manufacturer based on the lining process used. The packer shall not lose air pressure during the curing process. Care shall be taken in the release of packer pressure so as not to damage the liner, host pipe, or any adjacent connections.
6. The point repair lining shall be as free as commercially practical from visual defects such as foreign inclusions, dry spots, pinholes, and delamination. The lining shall be impervious and free of any leakage from the pipe to the surrounding ground or from the ground to the inside of the lined pipe.

3.17 WARRANTY

A. The Contractor shall warrant the CIPP installation for a period of three (3) years. During the Contractor warranty period, any defects which affect the integrity or strength of the pipe, as identified by the City during routine inspections, shall be repaired at the Contractor's expense in a manner recommended by the manufacturer and mutually agreed by the City and the Contractor.

B. This shall include but not be limited to all material, excavation, backfilling, cutting, concrete, pipe, shoring, temporary pavement, permanent pavement, permits, bypass pumping, surface restoration and other incidental work required to remove the liner from the existing pipe.

C. If removal is not feasible or if removal will cause more harm than acceptable to the host pipeline, alternatives may be proposed by the Contractor to the City for review and approval.

D. The integrity of the existing pipe where the liner was removed shall be rehabilitated by installing another liner or if this procedure is not feasible by installing a new pipe section.

E. There shall be no direct payment, to the Contractor, for this work.

3.18 PROTECTION OF EXISTING WORK

A. CIPP installations associated with this work may be along or through existing structures, manholes or pipe segments that have previously been rehabilitated.

B. Damage to existing linings (manhole coatings, existing CIPP installations, lateral linings, LCRs, etc...) due to the installation of the new CIPP liners or any work associated construction shall be repaired at no additional cost to the City. Requirements include, but is not limited to, the following:

1. Manhole wall corrosion protection top coats that are damaged or removed due to the installation or the curing of the new CIPP liner.
2. The previously rehabilitated manhole structure shall be repaired with a similar, compatible product as recommended by the manhole coating material manufacturer.
3. If repair of the existing structure coating is impossible, the existing manhole corrosion prevention product should be removed and the entire structure recoated.

3.19 REJECTION

A. Materials and installation may be rejected for failure to meet the requirements of this Section.

3.20 CLEANUP

A. After installation and testing, the Contractor shall clean up the entire project area. All excess material and debris shall be disposed of by the Contractor.

B. Cleanup shall be in accordance with Section 01566 – Cleanup Operations.

Drawing 06010-1 on the following page.

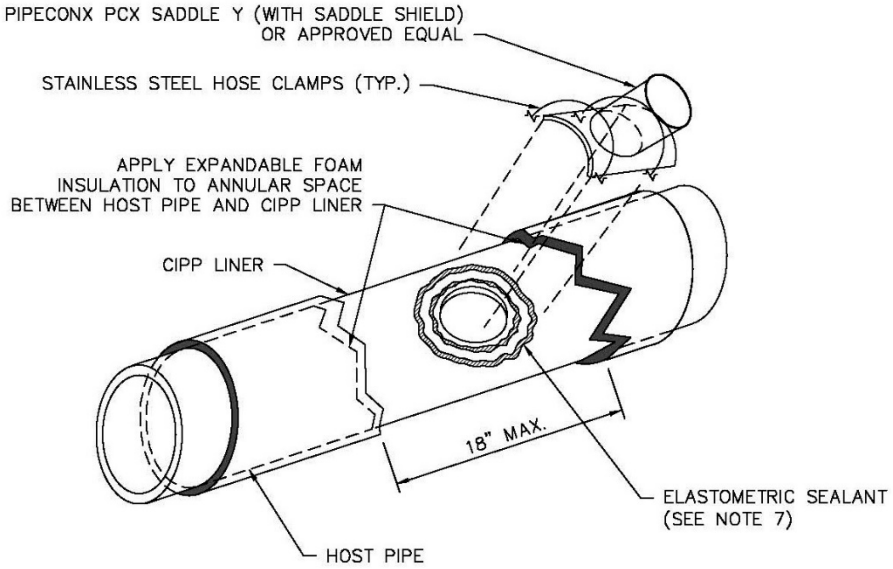

NOTES:

1. EXCAVATE BELOW THE EXISTING SEWER TO COMPLETE THE WORK.
2. CHIP AWAY HOST PIPE ONCE CIPP LINER HAS BEEN INSTALLED AND CURED.
3. CORE CIPP LINED PIPE TO SIZE OF SADDLE OPENING, SAVE COUPON FOR CITY.
4. CONTRACTOR SHALL GRIND DOWN THE CIPP LINER TO MAKE A SMOOTH CONNECTION PRIOR TO APPLYING THE SEALANT.
5. TAKE A PICTURE OF HOLE BEFORE INSTALLING SADDLE.
6. THE CONTRACTOR SHALL CONTACT THE CITY IF THE SADDLE IS UNABLE TO MAKE A GOOD CONNECTION OR IF A TEE SADDLE MUST BE INSTALLED INSTEAD.
7. APPLY TWO BEADS OF CONSEAL CS–1500 SEALANT OR APPROVAL EQUAL AROUND CORE HOLE.
8. ATTACH SADDLE ACCORDING TO MANUFACTURER'S RECOMMENDATIONS,
9. BACKFILL SEWER USING GRANULAR BEDDING AS SPECIFIED IN SECTION 02250 TRENCHING, PIPE EMBEDMENT AND BACKFILL.

SADDLE CONNECTION
ON SEWER WITH CIPP

WATER SERVICES
CITY OF KANSAS CITY, MISSOURI
DRAWING NO. 06010-1

DEVELOPED BY: TECHNICAL ADVISORY COMMITTEE
APPROVED BY:
DATE: 2/17/2021

1 OF 1

END OF SECTION

SECTION 06012 – REHABILITATION OF SEWER LATERALS AND SEWER LATERAL CONNECTIONS

PART 1 GENERAL

1.1 SUMMARY

This section covers all materials, labor and equipment required for the rehabilitation of sanitary sewer service laterals and sewer service lateral connections to the public sewer utilizing trenchless methods. A lateral tube shall be inverted and inflated to conform to the full circumference of the host pipe. The resin shall be cured following the manufacturer's recommendations. When cured, the tube shall be a water tight, structural liner, continuous to the connection point or manhole. The Contractor is responsible for all field measurements to accurately verify the length and diameter of each sewer lateral and sewer lateral connection to the public sewer main identified for rehabilitation. For open-cut point repairs of sanitary sewer service laterals and sanitary sewer service lateral connections, see Section 02505 – Sanitary Sewer Service Lines and Connections.

1.2 RELATED SECTIONS

A. Section 01000 – General Project Requirements.
B. Section 01015 – Specific Project Requirements.
C. Section 01300 – Submittals.
D. Section 02505 – Sanitary Sewer Service Lines and Connections.
E. Section 02676 – Sewer Line Cleaning.
F. Section 02686 – Multi-Sensor Inspection of Gravity Lines.
G. Section 06010 – Cured-In-Place-Pipe (CIPP), CIPP Point Repairs and End Seals.

1.3 CODES AND STANDARDS

A. The publications listed below form a part of this specification to the extent referenced. The publications are referred to within the text by the basic designation only.
B. American Society for Testing and Materials (ASTM):

ASTM D903	Test Method for Peel or Stripping Strength of Adhesive Bonds.
ASTM D790	Test Methods for Flexural Properties of Unreinforced and Reinforced Plastics and Electrical Insulating Materials.
ASTM D2990	Tensile, Compressive, and Flexural Creep and Creep- Rupture of Plastics.
ASTM D5813	Cured-in-Place Thermosetting Resin Sewer Pipe.
ASTM F1216	Rehabilitation of Existing Pipelines and Conduits by Inversion and Curing of Resin-Impregnated tube.
ASTM F2561-20	Standard Practice for Rehabilitation of a Sewer Service Lateral and Its Connection to the Main Using a One Piece Main and Lateral Cured-in-Place Liner.
ASTM F3240-19	Standard Practice for Installation of Seamless Molded Hydrophilic Gaskets (SMHG) for Long-Term Water Tightness of Cured-in-Place Rehabilitation of Main and Lateral Pipelines.

1.4 PACKAGING, HANDLING, SHIPPING AND STORAGE

A. Packaging, handling, delivery and storage of materials shall be done in accordance with the manufacturer’s recommendations and in accordance with Section 01000 – General Project Requirements.
B. Contractor shall submit manufacturer’s instructions for delivery and storage.

C. Contractor shall furnish required storage facilities. Onsite storage locations shall be approved by the City.
D. Handle materials at all times in compliance with the manufacturer's recommendations.
E. Damaged material, as determined by the City or its Design Professional, is unacceptable for installation.

1.5 INFORMATION PROVIDED BY THE CITY

A. As provided in the Contract Documents.

1.6 SUBMITTALS

A. Submit as specified in Section 01300 – Submittals.
B. Prior to commencing construction, the Contractor shall provide the following information of the proposed rehabilitation materials to the City for approval:
   1. Shop drawings and product data.
   2. The calculations, technical data, and complete physical properties of the materials related to the project.
   3. A work plan describing the type of rehabilitation method to be used, detailed preparation steps required for pre-installation, bypass pumping plan, methods required for point repairs, provision for continuous service, and steps and procedures for installation of rehabilitation methods.
C. The pre-construction Closed Circuit Television Inspection (CCTV) inspection video shall be submitted to the City after pre-construction cleaning has been completed. The post-construction CCTV shall be conducted after all work in a line segment is complete (point repairs, CIPP of main line, lateral rehabilitation, later connection rehabilitation and manhole rehabilitation).

1.7 QUALITY ASSURANCE

A. The Contractor is responsible for the quality assurance and quality control of the Work.

1.8 QUALIFICATIONS

A. A qualified bidder for installing a lateral liner or a main line to lateral connection repair system shall have the following qualifications:
   1. Two years of experience in installing lateral liners.
   2. Two years of experience in main line to lateral connection rehabilitation.
   3. Performed a minimum of 500 successful installations during this time period, including 1,000 feet of lateral lining. Bidders shall be prepared to submit a list of installation projects, numbers of connections rehabilitated and lateral footage lined. Provide contact names, addresses, and telephone numbers for references.

1.9 SERVICE LATERAL CIPP LINER TYPES

A. Standard Lateral Cured-In-Place-Pipe (CIPP) Liner from manhole, pit or cleanout: The finished CIPP liner shall be a one piece continuous tube, as specified herein, from the inversion point to the termination point. Tube shall have 2 Preformed Hydrophilic O-Rings on each end of the tube.
B. CIPP Full Wrap Lateral Connection Liner (Short and Long Liner): The finished liner shall have a one piece 360-degree full wrap main line CIPP liner with an integral lateral connection CIPP liner that is inverted into the lateral the distance as specified on the plans or a minimum of 18 inches. Full wrap rehabilitation shall not be required on 6 inch main line pipe or main line pipe greater than 24 inches in diameter. All Full Wrap Lateral Connection

Liners shall meet ASTM F2561-20. The contractor shall submit the recommend method for sealing the lateral/main line connection in pipe greater than 24 inches in diameter to the City for approval. The sealing method shall be approved by the City prior to commencing the work.

PART 2 PRODUCTS

2.1 STANDARD LATERAL CIPP LINER FROM MANHOLE, PIT OR CLEANOUT

A. Materials:

1. The tube shall consist of one or more layers of absorbent non-woven or needled felt fabric and meet the requirements of ASTM F1216, Section 5.1. The tube shall be constructed to withstand installation pressures and temperatures, be compatible with the resin system used, have sufficient strength to bridge missing pipe, and stretch to fit irregular pipe sections. Tube shall have 2 Preformed Hydrophilic O-Rings on each end.
2. The wet out tube shall have a relatively uniform thickness that when compressed at installation pressures will equal or exceed the calculated minimum design thickness.
3. The tube shall be manufactured to a size that when installed will tightly fit the internal circumference and length of the original pipe. Allowance should be made for circumferential stretching during inversion. Overlapped layers of felt in longitudinal seams are not allowed.
4. The tube shall be homogeneous across the entire wall thickness containing no intermediate or encapsulated elastomeric layers. No material shall be included in the tube that may cause delamination in the CIPP.
5. The outside layer of the tube shall be coated with an impermeable, translucent, and flexible membrane to facilitate monitoring the resin impregnation process and post installation inspection. The interior pipe surface of the CIPP after installation shall be a light reflective color so that a clear detailed examination with the CCTV can be conducted.
6. Seams in the tube shall be as strong as the non-seamed felt material.
7. The resin system shall be a corrosion-resistant polyester, vinyl ester, 100% solids silicate or epoxy system including all required catalysts, initiators or hardeners that when cured within the tube creates a composite that satisfies the requirements of ASTM F1216 and ASTM D5813. The resin shall produce a CIPP that meets the structural and chemical resistant requirements included in this specification.

B. Structural Requirements:

1. The CIPP shall be designed per ASTM F1216, Appendix X1. The design shall assume fully deteriorated host pipe. The nominal wall thickness shall be rounded up to the nearest 0.5 mm of the designed thickness. The minimum installed and cured thickness shall be 3 mm.
2. The manufacturer must have performed long-term testing for flexural creep of the CIPP material to be installed. Testing must have been completed within the last 18 months. Such testing results are to be used to determine the long-term, time dependent flexural modulus to be utilized in the product design. This is a performance test of the materials (tube and resin) and general workmanship of the installation and curing. A percentage of the instantaneous flexural modulus value was used in design calculations for external buckling. The percentage, or the long-term creep retention value utilized, will be verified by this testing. The materials utilized for the work shall be of a quality equal to, or better than, the materials used in the long-term test with respect to the initial flexural modulus used in the CIPP design.
3. The layers of the cured CIPP shall be uniformly bonded. It shall not be possible to separate any two layers with a probe or with the point of a knife blade so that the layers

separate cleanly or the probe or knife blade moves freely between the layers. If the layers separate during sample testing, new samples will be required to be obtained from the installed pipe. Any reoccurrence is cause for rejection of the work.

4. Any layers of the tube that are not saturated with resin, prior to insertion into the host pipe, shall not be included in the structural CIPP wall thickness computation.
5. The cured pipe material shall conform to the following structural properties:

Property	Test Method	Cured Composite Per ASTM F1216
Properties Flexural Modulus of Elasticity (Short Term)	ASTM D790	250,000 psi
Flexural Strength (Short Term)	ASTM D790	4,500 psi

6. The required structural CIPP wall thickness shall be based on the physical properties of the cured composite and per the design equations contained in the appendix of the ASTM standards for fully deteriorated pipe and the following design parameters:

DESIGN PARAMETER TABLE	
Design Safety Factor	2.0
Ovality	Calculated from X1.1 of ASTM F1216, and being not less than 2%
Soil Modulus	1,000 psi
Groundwater Depth	Fully submerged, top of pipe to surface
Soil Depth (above crown of existing pipe)	16 feet
Live Load	HS-25 Highway
Soil Load	120 pounds per cubic foot
Minimum Service Life	50 years

2.2 MAIN LINE TO LATERAL CONNECTION LINER WITH ONE PIECE FULL DIAMETER CIP LINER (SHORT OR LONG CONNECTION LINER)

A. General:

1. The CIPP main line to lateral connection liner repair system shall conform to ASTM F2561-20 and the structural properties outlined in Paragraph 2.01.B.5 and shall be:
   a. "LCR-Liner System" as manufactured by EPROS
   b. “Shorty” as manufactured by LMK Enterprise, Inc.
   c. “MTH-Liner System” as manufactured by EPROS
   d. "T-Liner” as manufactured by LMK Enterprise, Inc.
2. The service lateral connection repair shall include a minimum 16 inch length CIPP repair covering 360 degrees of the main line sewer (6 inches on either side of a 6 inch lateral) with integral CIPP lateral liner.
3. Liner Gasket system shall be per ASTM F2561-20 and F3240-19:
   a. Two (2) each Hydrophilic preformed O-rings at the termination point of lateral tube.
   b. One (1) each Hydrophilic Hydrohat gasket as Manufactured by LMK Technologies at the main to lateral connection of the liner.

4. The one piece full wrap lateral connection CIPP shall extend to the distance specified on the plans or a minimum of 18 inches into the lateral.
5. Install the lateral liner the distance shown in the Sewer Main and Lateral Rehabilitation Schedule in the construction contract documents.
6. The rehabilitation shall be accomplished using a non-woven textile tube of adequate length and a thermo-setting or UV cured resin with physical and chemical properties appropriate for the application. The liner shall be installed in accordance with the manufacturer's recommendations.

2.3 LATERAL CONNECTION WITH BRIM STYLE CIPP SHORT LINER (LAPEL LINER)

A. For locations that the full wrap lateral liner is not allowed to be installed, the CIPP lateral to main connection liner repair system shall be Lateral Sealing and Repair. The Lapel Liner Lateral Sealing and Repair shall be installed as provided by LMK or City approved equal. The Contractor shall get approval from City prior to the installation of the Lapel Liner Lateral Sealing and Repair. These systems shall conform to the following structural properties:

Property	Test Method	Cured Composite Per ASTM F1216	Resin
Properties Flexural Modulus of Elasticity (Short Term)	ASTM D790	250,000 psi	400,000 psi
Flexural Strength (Short Term)	ASTM D790	4,500 psi	4,500 psi

B. The Lapel Liner tube insert shall be fabricated to a size that when installed will key into the internal surface irregularities of the lateral joint using an Insignia Hydrophilic Hydrohat (4″ and 6″) or Hydrophilic Brim (8″ or larger) as manufactured by LMK Technologies.
C. The insert laminate shall seal to the inside wall of the sewer main using a Stainless Steel flange and fasteners around the lateral opening and to the lateral wall 18 inches (minimum) up into the lateral pipe from the main with two hydrophilic O-rings at the termination point in the lateral.
D. Unless otherwise specified, the installer shall furnish a specially formulated resin and catalyst system compatible with the service lateral connection process that provides cured physical strength at least to the same level as required for the lateral liner, if specified.

2.4 MATERIAL

A. The liner shall be continuous in length and consist of one or more layers of absorbent textile material and meet the requirements of ASTM F1216 and ASTM D5813.
B. The outside layer of the tube shall be coated with an impermeable, translucent, and flexible membrane/coating to facilitate monitoring the resin impregnation process and post installation inspection. The interior pipe surface of the CIPP after installation shall be a light reflective color so that a clear detailed examination with the CCTV can be conducted.
C. Grouting Material:
   1. Chemical grouts may be used for stopping active infiltration and shall be mixed and applied per manufacturer's recommendations.
   2. The use of chemical grout shall be considered incidental to the unit cost of the CIPP lateral to main connection liner repair.

D. Resin System:
   1. The resin/liner system shall conform to ASTM D5813, 10,000 hour test.
   2. The resin shall be a corrosion resistant polyester, vinyl ester, epoxy, or silicate resin and catalyst system that when properly cured within the composite liner assembly meets the requirements of ASTM 1216.

PART 3 EXECUTION

3.1 PREPARATORY PROCEDURES

A. The Contractor shall comply with the following procedures unless other procedures are accepted by the City. Prior to the commencement of the actual liner tube inversion process, the Contractor shall plan its work after review of previous television inspection videos and reports. All point repairs shall be satisfactorily completed, equipment and material mobilized, and the City shall be informed of the impending work schedules.

3.2 SAFETY

A. The Contractor shall carry out its operations in strict accordance with all OSHA and manufacturer's safety requirements. Particular attention is drawn to those safety requirements involving entering confined spaces.
B. The Contractor shall inform City of any hazardous material encountered during this project.
C. The Contractor shall submit a plan for each inversion for the control of gas migration from the off gassing that takes place during the curing process for all resin systems containing styrene. The plan shall include but not limited to flow through plugs and negative pressure ventilation. This plan shall be submitted to the City for approval prior to beginning of work.

3.3 PROTECTION OF PROPERTY

A. The Contractor shall prevent damage to all public and private property. The Contractor shall provide protective measures (felt, blocks of wood, plywood, cardboard, concrete blocks, street plates, etc.) to create a barrier between the boiler/steam hoses and grass for each installation.
B. All surfaces shall be restored to original or better condition.

3.4 CLEANING OF MAINLINE AND SERVICE LATERALS

A. The Contractor is required to remove all internal debris from the sewer lines so the entire pipe can be thoroughly inspected and successfully reconstructed. Pipe to be lined shall be cleared of protruding service connections, debris and all other obstructions that will hinder the liner tube inversion.
B. All sludge, dirt, sand, rocks, grease and all other solid or semi-solid material resulting from the cleaning operation shall be removed at the downstream manhole of the section being cleaned. Passing material from one manhole section to another shall not be permitted.
C. All debris resulting from cleaning operations shall be removed from the site and disposed of in the proper manner. The Contractor shall bear all costs associated with proper disposal. Disposal of the debris shall be in accordance with all local, state, and federal regulations.
D. All debris shall be removed from the downstream manhole and the jobsite daily. No debris shall be left at the site unattended by the Contractor. Under no circumstances will the Contractor be allowed to accumulate debris beyond the stated time. In the event the Contractor leaves debris unattended at the site beyond the stated time, the Contractor will not be allowed to proceed with the work until the debris is properly removed.
E. Contractor shall inform the City of their planned dump site during the Pre-Construction Conference.

F. During all sewer cleaning operations, satisfactory precautions shall be taken to protect sewer lines from damage that might be inflicted by improper use of cleaning equipment. Precautions shall be taken to ensure that the cleaning operation will not cause any damage or flooding to public and/or private property being served by the sewers involved. The Contractor shall bear full costs associated with any flooding or damage to basements or structures.

G. If necessary, Contractor shall proceed with heavy cleaning until the lateral is cleaned to the permanent easement boundary, right-of-way line or the distance specified in the Rehabilitation Schedule. The Contractor shall assume heavy cleaning may be required and no separate payment will be made for heavy cleaning. All laterals to be rehabilitated shall be cleaned 3 feet beyond the specified termination point specified on the Rehabilitation Schedule.

H. Contractor shall inform City if lateral can't be cleaned and provide video and explanation why the lateral rehabilitation should be transferred to the open cut repair list. City shall approve the transfer prior to commencing work. The removal of roots shall not be a reason for transferring the lateral to the open cut repair list. The City may require Contractor to attempt to install a lateral liner prior to transferring the lateral to the open cut repair list.

3.5 SEWER SERVICE

A. At no time shall wastewater be discharged on streets, alleys, or in storm drainage systems. The Contractor shall provide adequate temporary by-pass pumping for routing the flow of wastewater around the section of pipe under repair.

B. The Contractor shall take all necessary steps to prevent the flooding of any resident or business and shall be liable for any damages incurred by basement backups.

3.6 INSPECTION OF MAINLINE AND SERVICE LATERALS

A. The Contractor shall provide CCTV inspection of the mainline and service laterals by experienced personnel specifically trained in locating and identifying defects, breaks, obstacles including active or abandoned service laterals. The interior of the mainline and service laterals shall be carefully inspected to determine the location and extent of any structural failures, pipe deflections, offset joints or other factors that will affect the installation and performance of the liner. The location of any condition which may prevent proper installation shall be noted and immediately brought to the attention of the City so that such conditions can be corrected. CCTV inspections shall continue a minimum of 3ft beyond the termination point of the installed liner. A video and suitable log shall be supplied by the Contractor to the City. All pre and post CCTV Inspection of pipe shall be considered incidental to the Bid Price.

3.7 LINE OBSTRUCTIONS

A. The Contractor shall identify and bring to the City's attention any repairs required (such as excessively dropped joints, intruding service connections, excessively deformed or collapsed pipe) or conditions which prevent completion of the lining process.

B. The Contractor shall make necessary repairs to allow for liner installation or remove the repair from the liner installation schedule and then repair by open cut replacement.

3.8 SERVICE LATERALS

A. Prior to installation of the service lateral liner, active service laterals shall be reinstated to one hundred percent (100%) capacity prior to installing service lateral connection liners, in accordance with Section 06010 – Cured-In-Place- Pipe (CIPP) Liner. The reinstated lateral opening shall be perfectly round with no jagged edges. All jagged edges shall be ground smooth.

B. Only active service connections shall be reinstated. If the Contractor reinstates an inactive

service, then the Contractor shall repair the CIPP liner or main at no additional cost to the City.

C. After the service laterals have been inspected by a lateral launch CCTV inspection from the main line, Contractor shall coordinate with City to determine if the lateral can be lined. The intent of the CCTV inspection is to launch the camera from the main line into the service lateral to assist in identifying active service connections and inspect the service laterals for conditions that prevent installation of the CIPP liner.

D. Reinstatement tools shall be onsite at all times when CIPP work is being performed.

3.9 REHABILITATION OF LATERAL AND LATERAL CONNECTION

A. CIPP for Lateral Rehabilitation:

1. Installation of CIPP for Lateral Rehabilitation shall be in accordance with ASTM F1216, with the following modifications:
   a. The quantity of resin used for tube impregnation shall be sufficient to fill the volume of air voids in the tube with additional allowances for polymerization shrinkage and the loss of resin through cracks and irregularities in the original pipe wall.
   b. Vacuum impregnation process is required and shall be used to insure thorough resin saturation throughout the length of the liner tube. The point of vacuum shall be no further than 25 feet from the point of initial resin introduction. The leading edge of the resin slug shall be as near to perpendicular to the longitudinal axis of the tube as possible. A roller system shall be used to uniformly distribute the resin throughout the tube.
   c. The wet out tube shall be positioned in the pipeline using the inversion method. The tube should be inverted through an approved access point and fully extend to the next designated termination point.
   d. Any protruding liner into the main shall be removed by remote robotic cutting equipment or other approved method.
   e. After the liner is inverted, the liner shall be cured as recommended by the resin manufacturer.
   f. Contractor shall cool down the CIPP once curing is complete in accordance with the manufacturer's recommendations. Temperatures and curing data shall be monitored and recorded by the Contractor throughout the curing process and delivered to the City, if requested.

B. Lateral Connection With One Piece Full Wrap CIPP Liner:

1. A cleanout, if applicable, shall be located or constructed as indicated on the Drawings. Cleanouts shall not be installed without City documentation and approval. The upstream side of the cleanout shall be plugged during the insertion and curing of the liner assembly ensuring no flows enters the pipe and no air, steam or odors will enter the building. All cost associated with the installation of a cleanout shall be considered incidental and included in the unit cost for lateral connection with one piece full wrap CIPP liner.
2. The lateral liner shall be sized according to the existing pipe diameter and condition.
3. The lateral liner and main line sheet shall be installed in accordance with the manufacturer's recommendations. The system shall be encapsulated within the bladder and vacuum impregnated with resin under controlled conditions. The volume of resin used shall be sufficient to fill all voids in the lining material at nominal thickness and diameter. No dry or unsaturated area in the main line sheet or lateral liner shall be acceptable upon visual inspection.

4. The main line bladder shall be inflated and the lateral liner shall be positioned in the pipeline using the inversion method. Pressure is maintained throughout the curing period. The liner shall be cured by an approved heat source or UV light, if necessary, to reduce the time required for curing. The heat source temperatures shall be monitored and logged during the curing process.
5. The finished CIPP liner shall be continuous over the scheduled length of the rehabilitated service lateral and 16 inches of the main pipe (6 inches on either side of 6 inch lateral). The CIPP liner shall be smooth and free of dry spots, lifts, and delaminated portions. The CIPP liner shall taper at each end providing a smooth transition. The finished product shall result in an airtight and watertight connection between the main line sewer and lateral per ASTM 2561-20.

3.10 INSPECTION

A. Verification of the mainline, lateral liner and lateral connection being watertight and free from defects shall be confirmed during the post lining CCTV inspection performed by the Contractor. Both the pre and post CCTV lateral inspection shall be conducted by the use of CCTV equipment. The CCTV inspection shall include a 360 degree view of the mainline and the entire lateral liner.

B. After the work is completed, the Contractor shall provide the City with the pre and post construction CCTV footage. The finished liners shall be free from leakage and visual defects such as foreign inclusions, dry spots, fins, pinholes, significant wrinkles or other deformities. The Contractor shall allow enough time in the schedule for a thorough evaluation of the inspection footage.

3.11 CLEANUP

A. Upon completion and acceptance of the installation, the Contractor shall restore the project area to an equal or better condition that existed prior to starting the work.

3.12 REJECTION

A. Materials and installation may be rejected by the City for failure to meet all the requirements of this Section.

END OF SECTION